Thank you for your purchase!

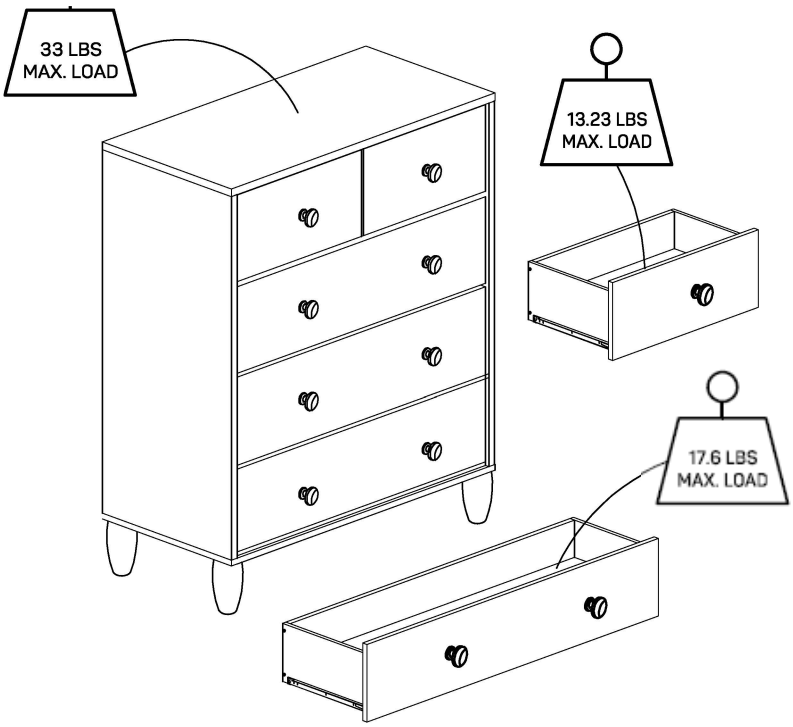

KIDS 5 DRAWER DRESSER

ASSEMBLY INSTRUCTIONS

Before You Begin:
Please identify all component parts and hardware pieces required before you begin. Carefully remove all of the components from the packaging and set aside for assembly. Assemble on a soft surface to prevent scratching during assembly.

Caution:
Tighten all components securely before use. Failure to do so may result in personal injury.
DO NOT use any sharp objects to open plastic wrapped components as damage to product or components may result.

Warning:
CHOKING HAZARD - Small Parts. Adult Assembly Required.

Injuries may result from tipping furniture. You must install Tipping Restraint Hardware with the unit to prevent the unit from tipping and causing any accidental injury, instability, death or damage. The tipping restraint is intended only as a safety measure, it is not a substitute for proper adult supervision.

The tipping restraint is not an earthquake restraint. If you wish to add the extra security of earthquake restraints, they must be purchased and installed separately.

Serious or fatal crushing injuries can occur from furniture tipping over. To prevent furniture from tipping over it must be permanently fixed to the wall. Fixing devices for the wall are not included since different wall materials require different types of fixing devices. Use fixing devices suitable for the walls in your home.

Note: Manufacturer assumes no liability for improper installation or excessive loads placed on screws or brackets.

Failure to detach this restraint before moving furniture may result in injury or damage.

DO NOT ALLOW CHILDREN TO CLIMB ON FURNITURE

Customer Service Email: Customerexperience@theubiquegroup.com I Phone: 866-552-2810

196861165726 / 196861165719

★★★★★

Congratulations!

You just purchased a piece of happiness. At Ubique Group, we believe you can transform your spaces into the most inspired places with furnishings that are the perfect combination of form, function and style. As original innovators of online furniture retail, we offer the best selection of popular, contemporary styles at cool, comfortable prices. And, with decades of proven shipping and packaging expertise, our Extended Quality Checklist ensures a rewarding, hassle-free experience time and time again. It's just what you need to bring your vision to life.

Thank you & Enjoy!!

your friends at Ubique Group

LIKE IT!

Share it on social & Tell a friend! #Spaces2Places

LOVE IT!

Write an online product review where purchased

NOT SURE?

Let us help! Contact our customer support.

Have a question, concern or simply need a hand? Your satisfaction is our top priority.
Contact us at 866-552-2810 or customerexperience@theubiquegroup.com. We're here to help!

Browse Our Branded Collections

There's something for everyone inside our family of brands.

FLASH FURNITURE®

MERRICK | LANE

Taylor & Logan

Emma+Oliver

MASADA RUGS

HBCY CREATIONS

BlackArc®

Visit www.theubiquegroup.com/brands or scan this code.

ubique.
GROUP

We pride ourselves on providing an excellent customer experience starting right here with your package and instructions. Everything you need should be right where you need it, so you can get to enjoying your new item ASAP. But despite our best efforts, sometimes "slips happen." If you need any support, from replacement parts to recommendations, please reach out to our wonderful customer support team at 866-552-2810 or customerexperience@theubiquegroup.com. We're here to help!

EVERY UBIQUE GROUP PRODUCT

Quality & Durability Tested

Packaged with Care

Shipped from our U.S. Facility

Designed for Easy Assembly

Ethically Sourced

Please visit https://www.theubiquegroup.com/warranty for complete warranty information.

Read this manual before using this product. Failure to follow the instructions and safety precautions in this manual can result in serious injury or death. Keep this manual in a safe location for future reference.

This Cam Lock Fastening System will be used throughout the assembly process.

** If the pin position is offset, use pliers to hold the flip switch in the upright position and carefully turn the switch lock to the center of the opening.

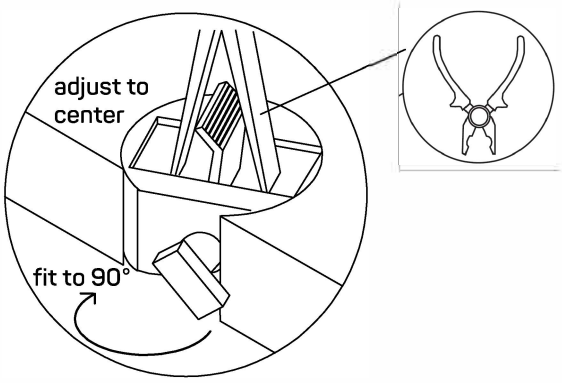

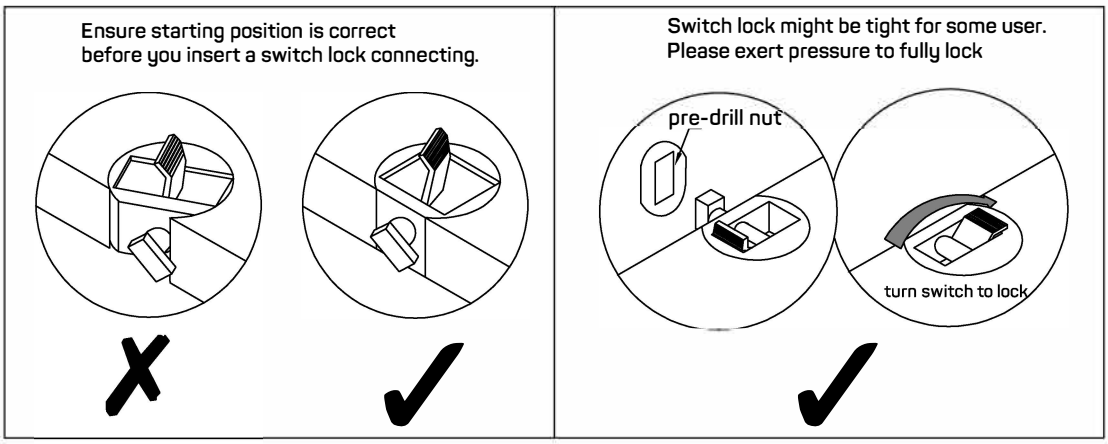

PARTS LIST

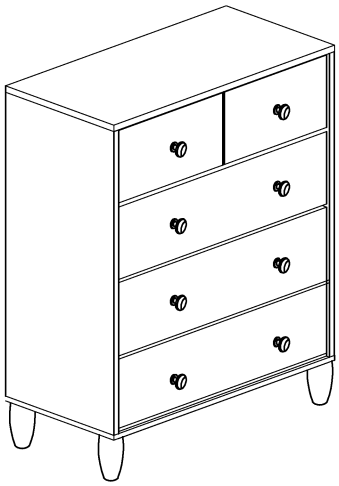

A 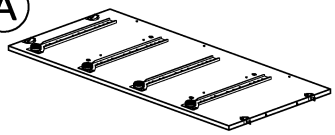 SIDE PANEL RIGHT 1PC	B 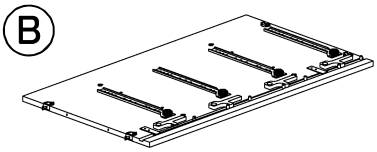 SIDE PANEL LEFT 1PC	
C 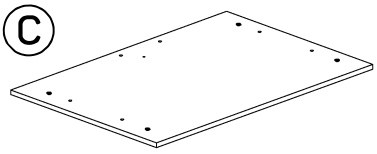 TOP PANEL 1PC	D 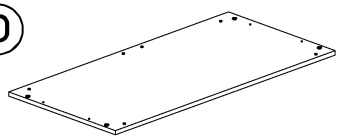 BOTTOM PANEL 1PC	
E 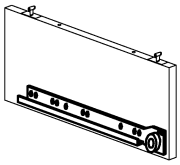 CENTER PANEL 1PC	F 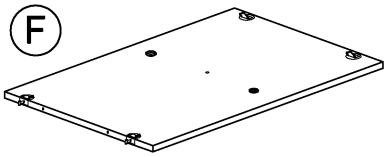 UPPER FIXED SHELF 1PC	G 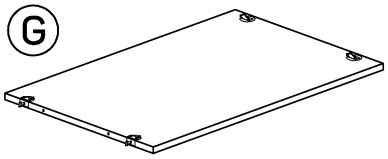 CENTER SUPPORT 1PC
H 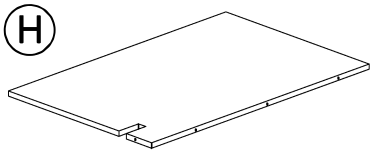 BACK PANEL RIGHT 1PC	I 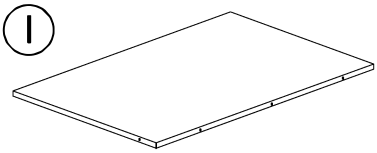 BACK PANEL LEFT 1PC	J 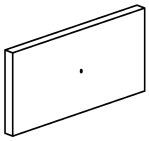 DRAWER FRONT TOP LEFT 1PC
K 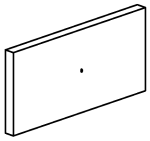 DRAWER FRONT TOP RIGHT 1PC	L 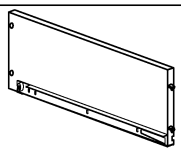 DRAWER SIDE PANEL LEFT 5PCS	M 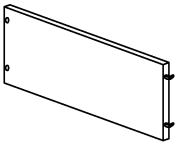 DRAWER SIDE PANEL RIGHT 5PCS
N 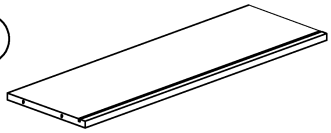 DRAWER BACK PANEL SMALL 2PCS	O 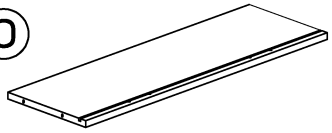 DRAWER BACK PANEL BIG 3PCS	P 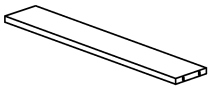 DRAWER BOTTOM SUPPORT 6PCS
Q 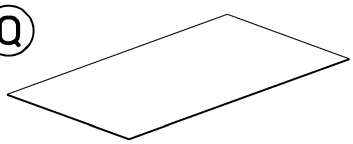 DRAWER BOTTOM BIG 3PCS	R 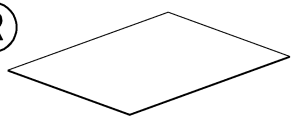 DRAWER BOTTOM SMALL 2PCS	S 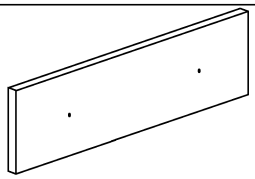 DRAWER FRONT BIG 3PCS

HARDWARE LIST

ITEM	DESCRIPTION	QTY
1	0.24'' x 1.18'' WOOD DOWEL	52 pcs
2	0.24'' x 1.57'' WOOD DOWEL	12 pcs
3	DRAWER FASTENER	12 pcs
4	0.16'' x 0.98'' MACHINE SCREW	8 pcs
5	REAR CONNECTOR	20 pcs
6	FLOOR GLIDE	4 pcs

ITEM	DESCRIPTION	QTY
7	WOODEN KNOB	8 pcs
8	Ø34/58 x 5.9'' WOODEN LEG	4 pcs
9	SAFETY BRACKET KIT 9a 9b 9c 9d	1 pc
10	ALLEN KEY	1 pc
11	0.24'' x 0.98'' SCREW	2 pcs

INSTALLATION

STEP 1

1 0.24" x 1.18"
WOOD DOWEL
12pcs

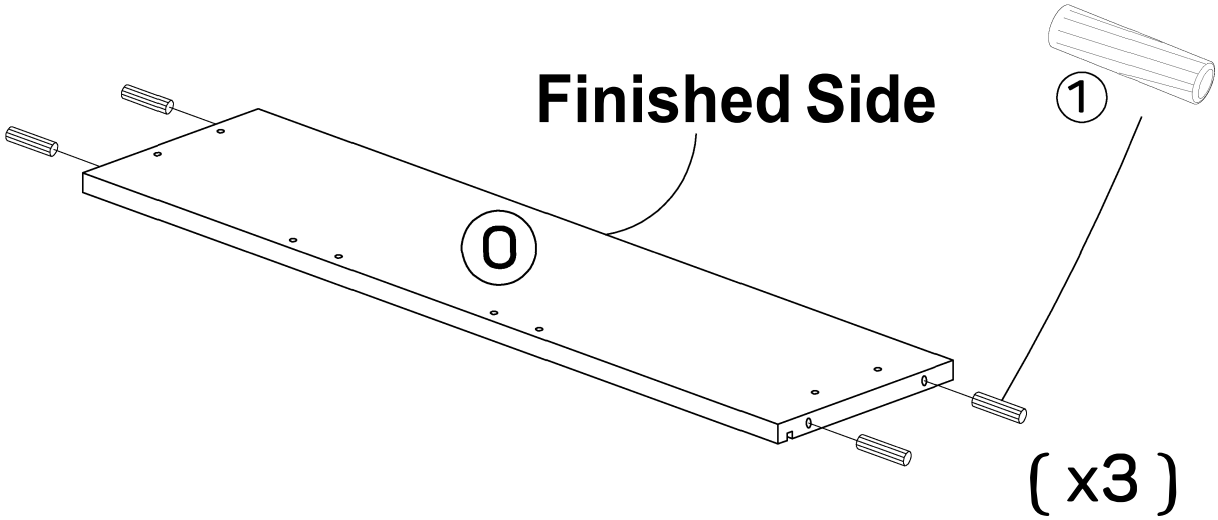

STEP 2

2 0.24" x 1.57"
WOOD DOWEL
12pcs

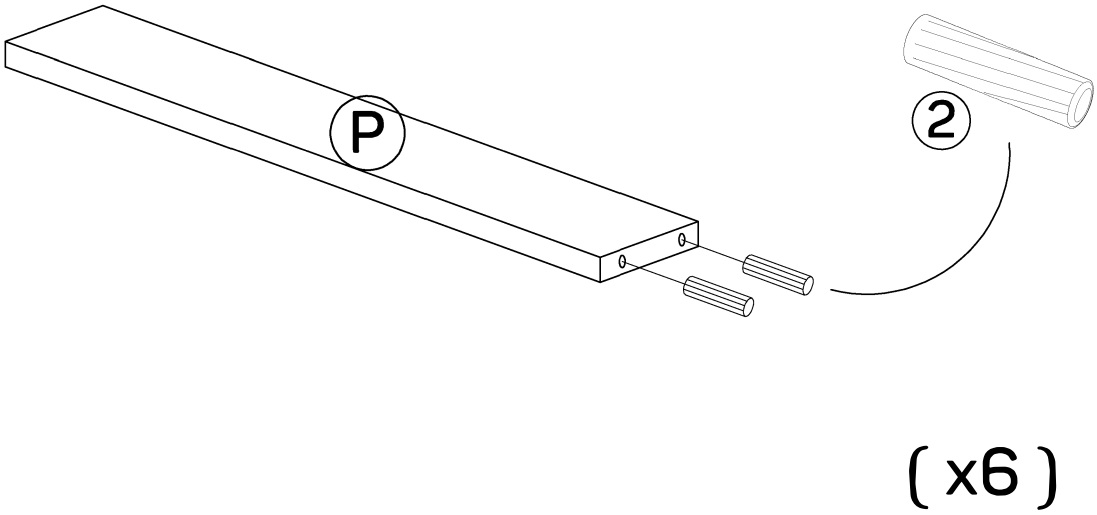

STEP 3

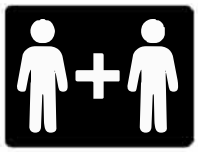

Insert the hooks of drawer side panels (L) and (M) into the drawer front (S) holes at a 45° angle. While keeping slight downward pressure, adjust boards outwardly to full 90° angle.

NOTE:The drawer sides will be slightly unstable until the drawer bottom is installed in step 4.

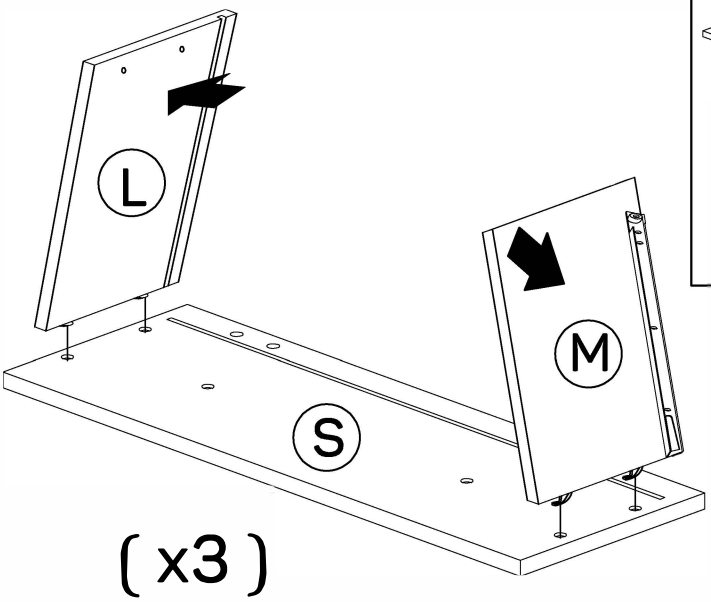

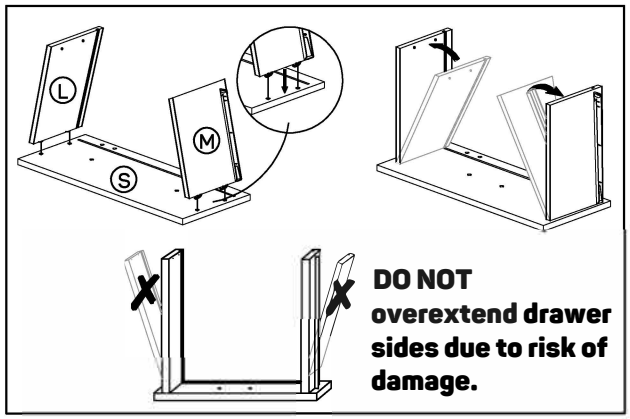

STEP 4

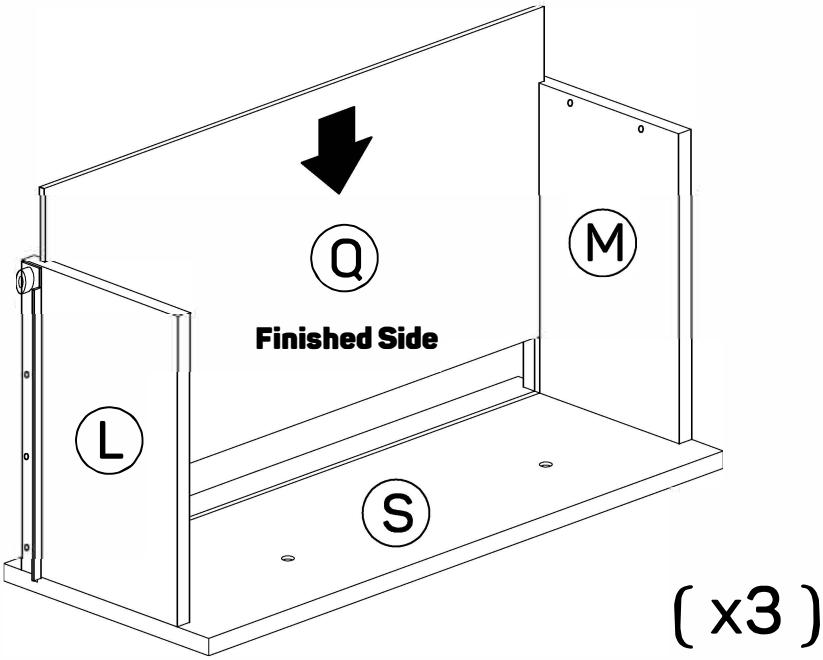

STEP 5

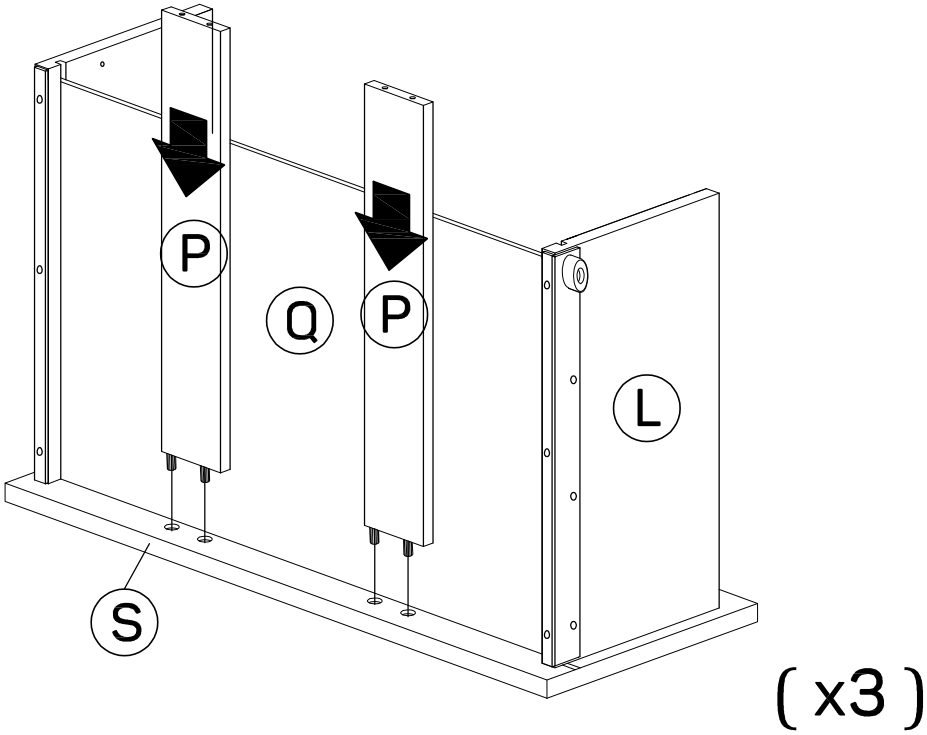
P
Q
P
L
S
(x3)

STEP 6

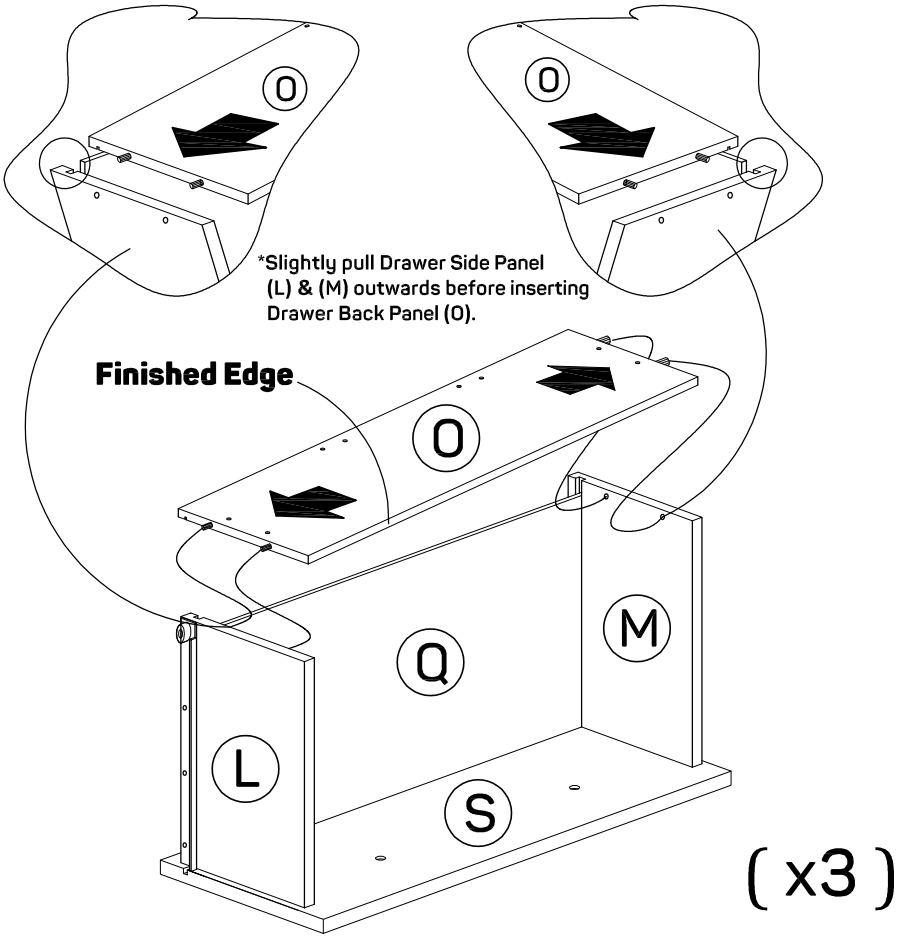
O
O
*Slightly pull Drawer Side Panel (L) & (M) outwards before inserting Drawer Back Panel (O).
Finished Edge
O
M
Q
L
S
(x3)

STEP 7

5 REAR CONNECTOR
12pcs

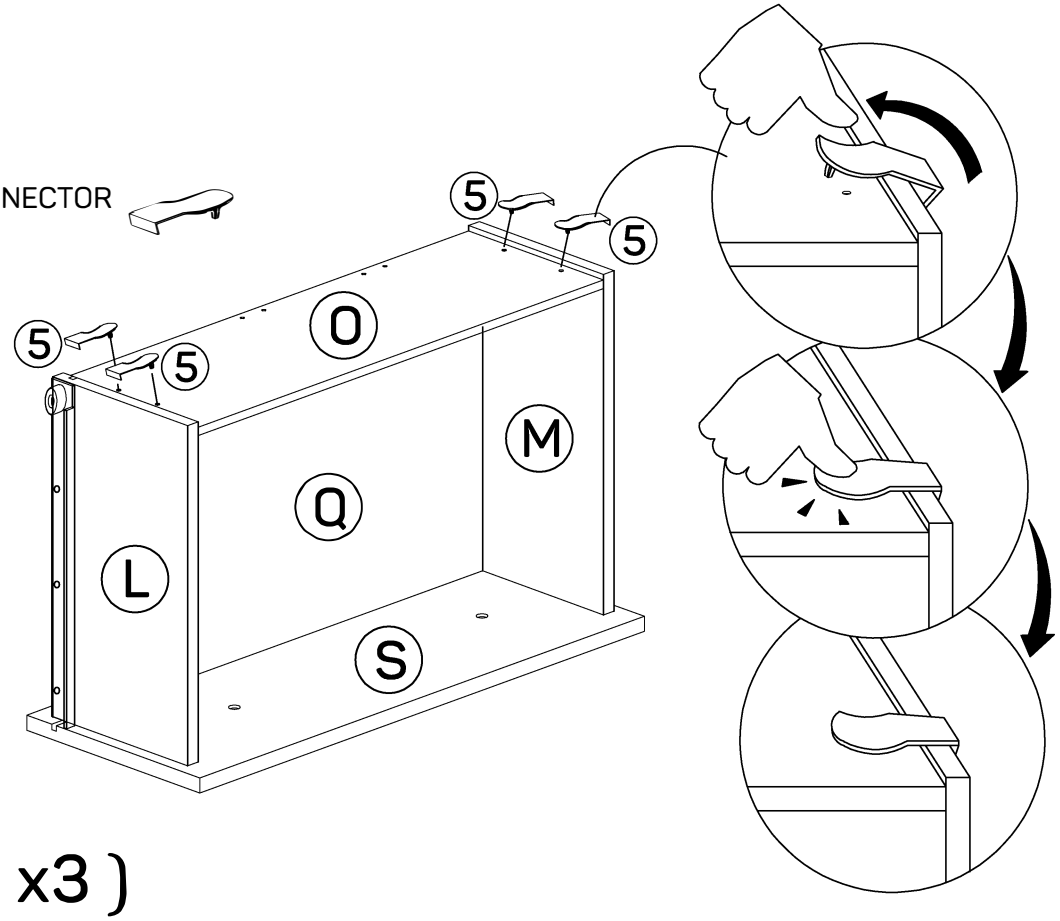

(x3)

STEP 8

3 DRAWER FASTENER
12pcs

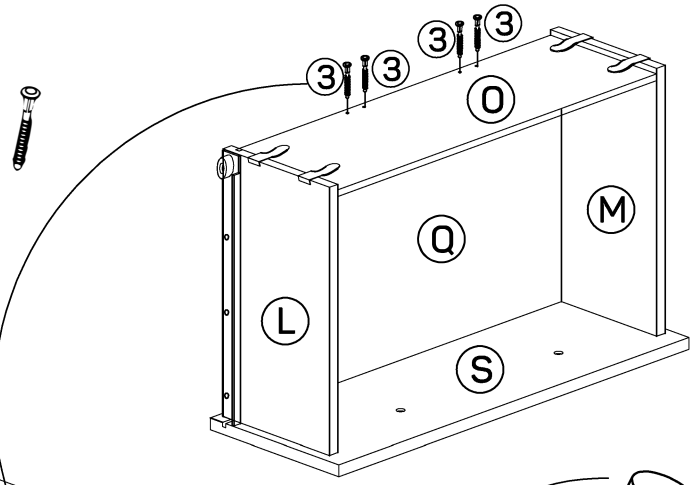

(x3)

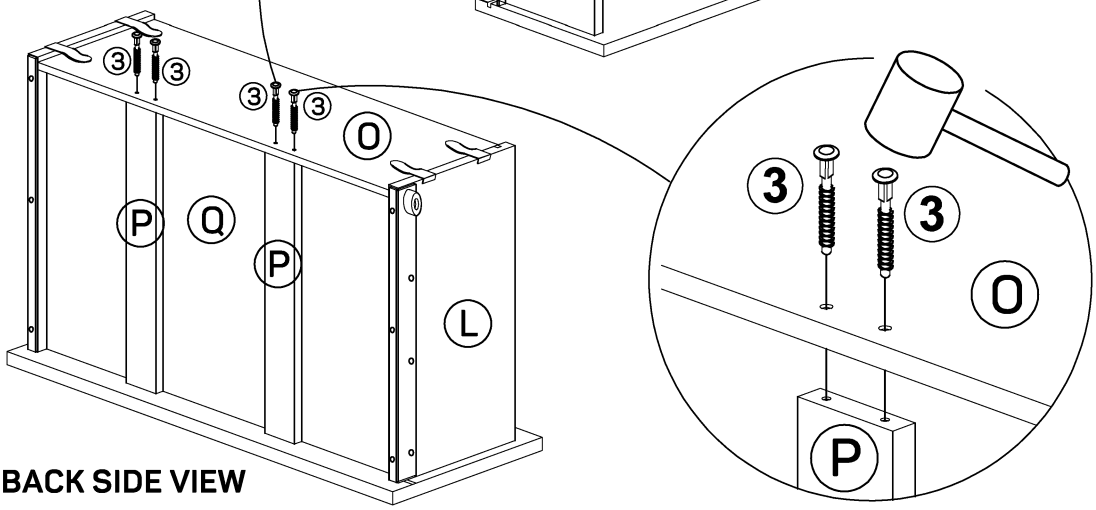

BACK SIDE VIEW

STEP 9

4 0.16'' x 0.98''
MACHINE SCREW
6pcs

7 WOODEN KNOB
6pcs

10 ALLEN KEY
1pc

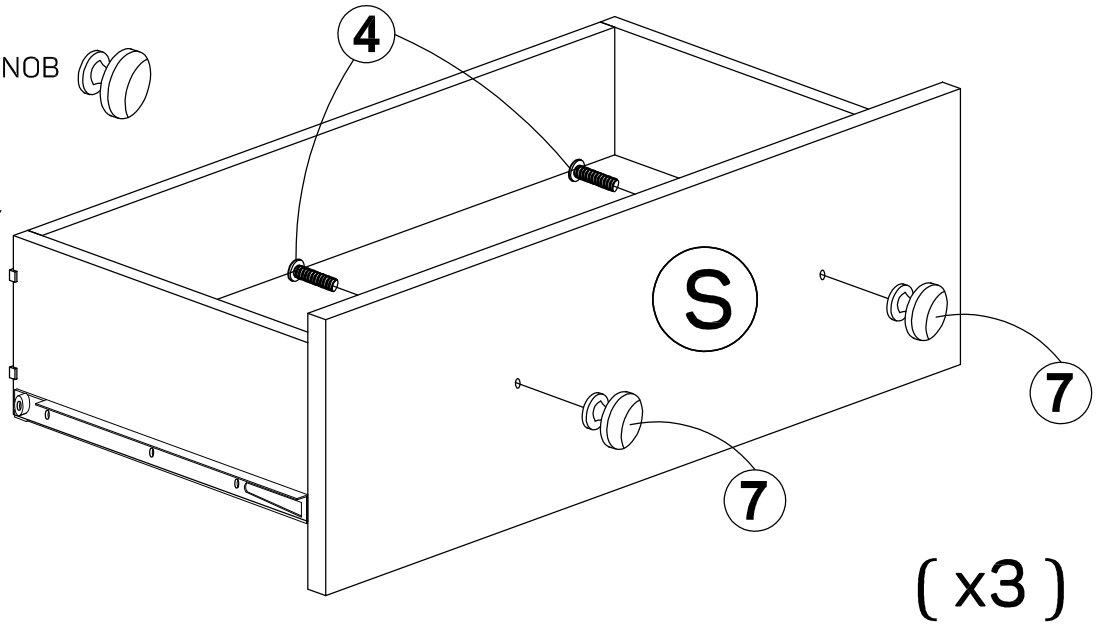

STEP 10

1 0.24'' x 1.18''
WOOD DOWEL
8pcs

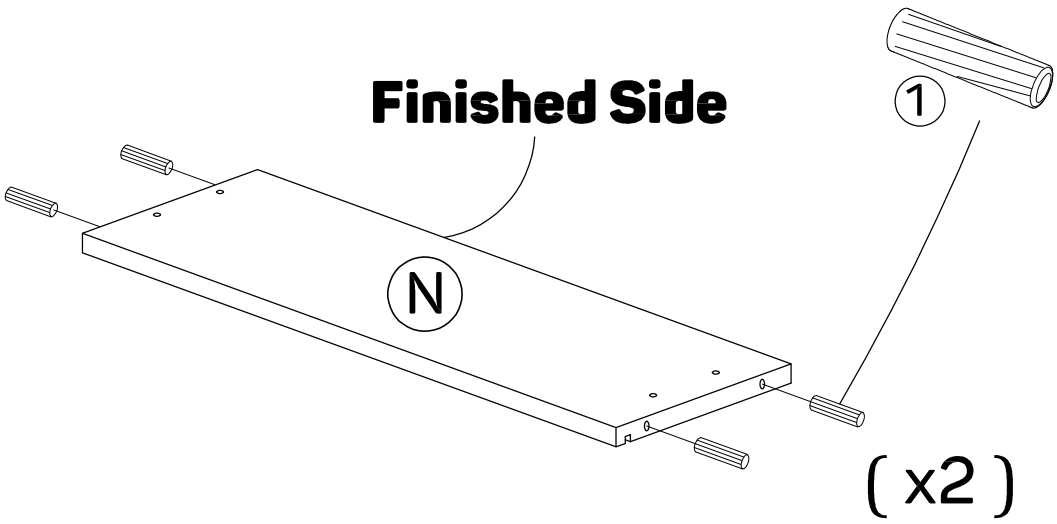

STEP 11

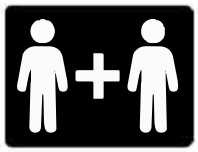

Insert the hooks of drawer side panels (L) and (M) into the drawer front (J) holes at a 45° angle. While keeping slight downward pressure, adjust boards outwardly to full 90° angle.

NOTE: The drawer sides will be slightly unstable until the drawer bottom is installed in step 12.

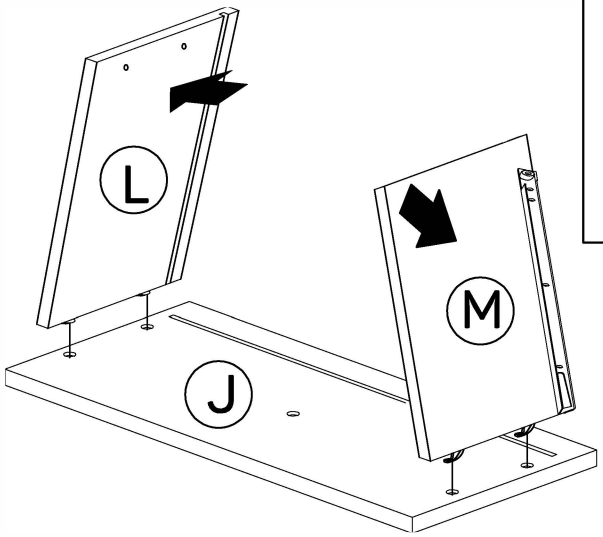

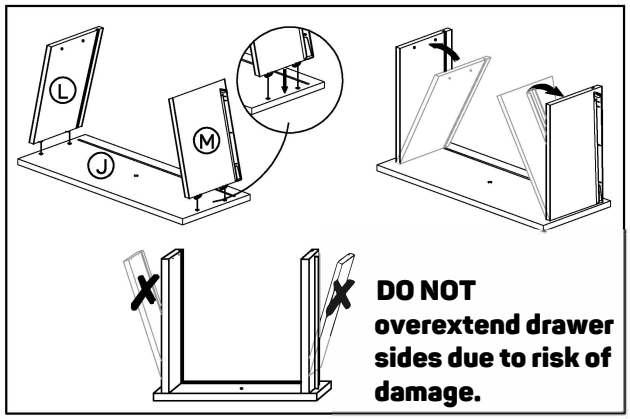

STEP 12

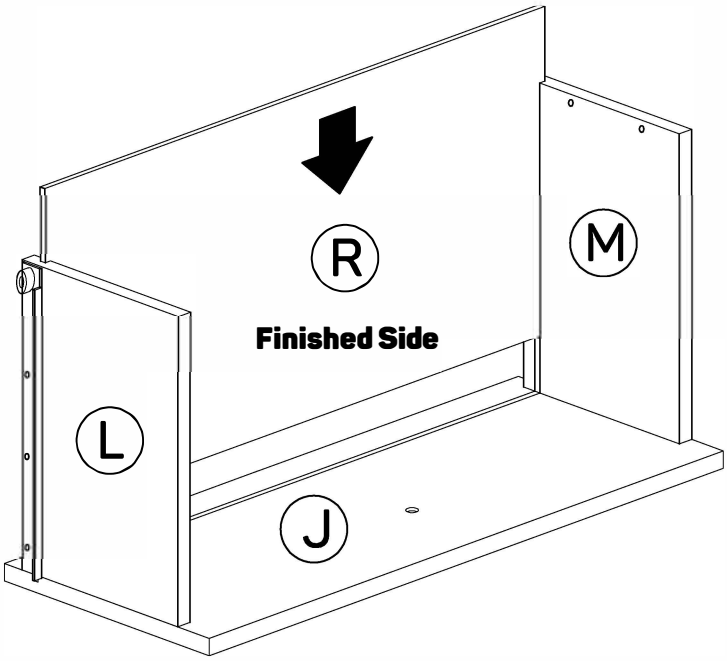

STEP 13

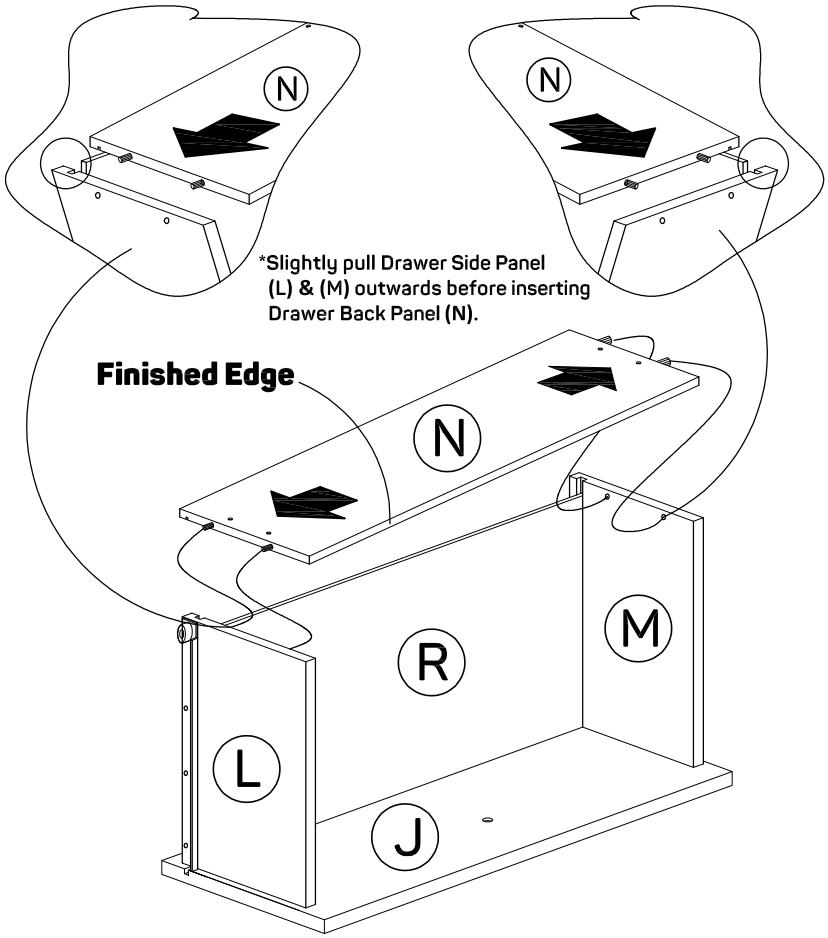

STEP 14

5 REAR CONNECTOR
4pcs

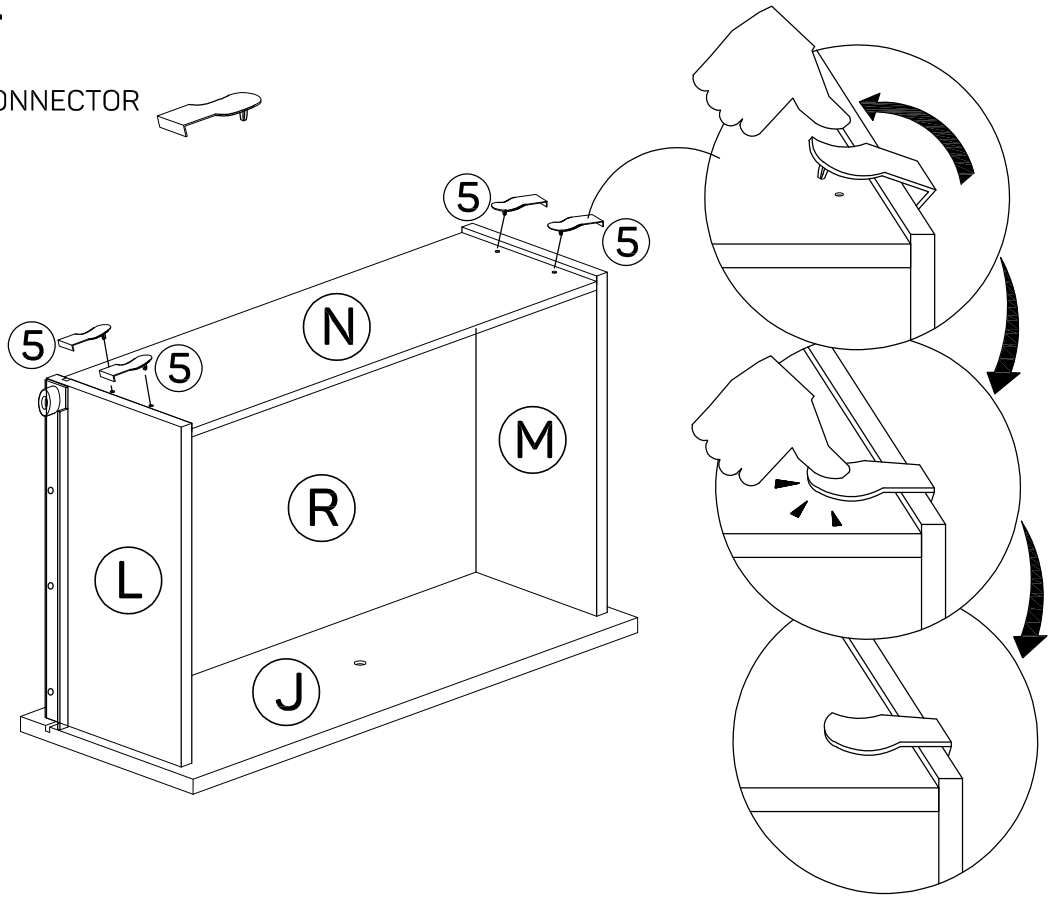

STEP 15

4 0.16" x 0.98" MACHINE SCREW 1pc

7 WOODEN KNOB 1pc

10 ALLEN KEY 1pc

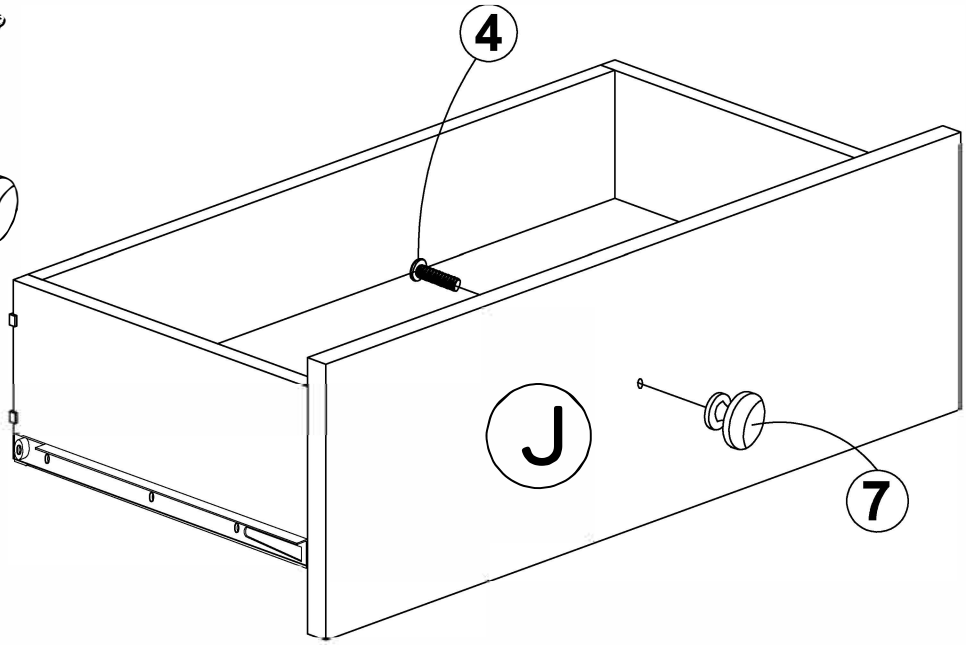

STEP 16

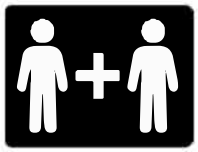

Insert the hooks of drawer side panels (L) and (M) into the drawer front top right (K) holes at a 45° angle. While keeping slight downward pressure, adjust boards outwardly to full 90° angle.

NOTE: The drawer sides will be slightly unstable until the drawer bottom is installed (step 17).

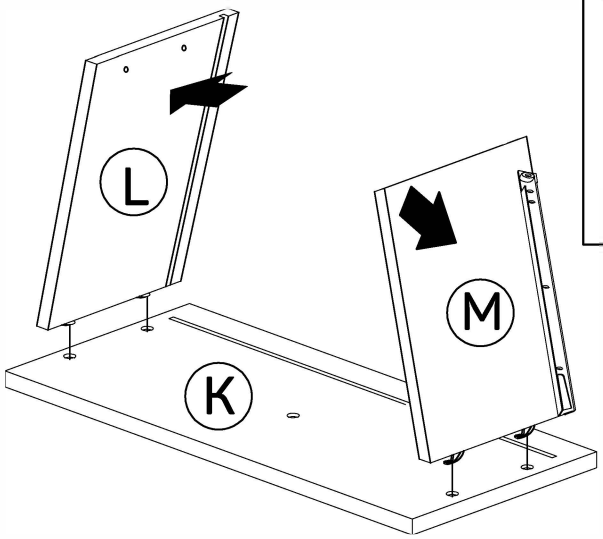

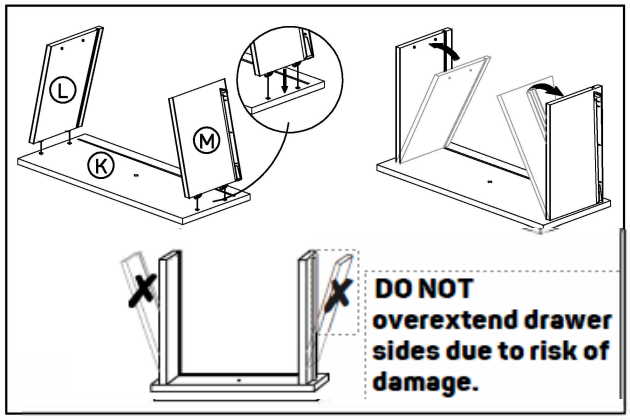

STEP 17

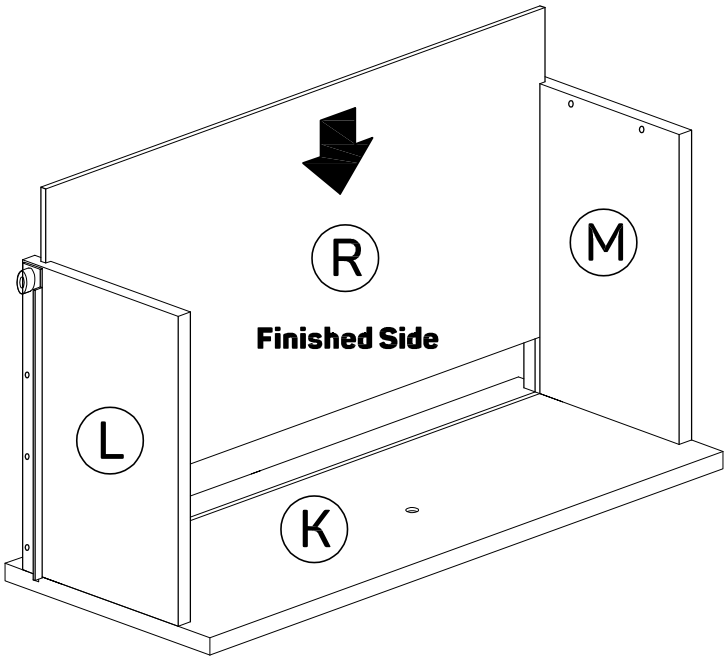

STEP 18

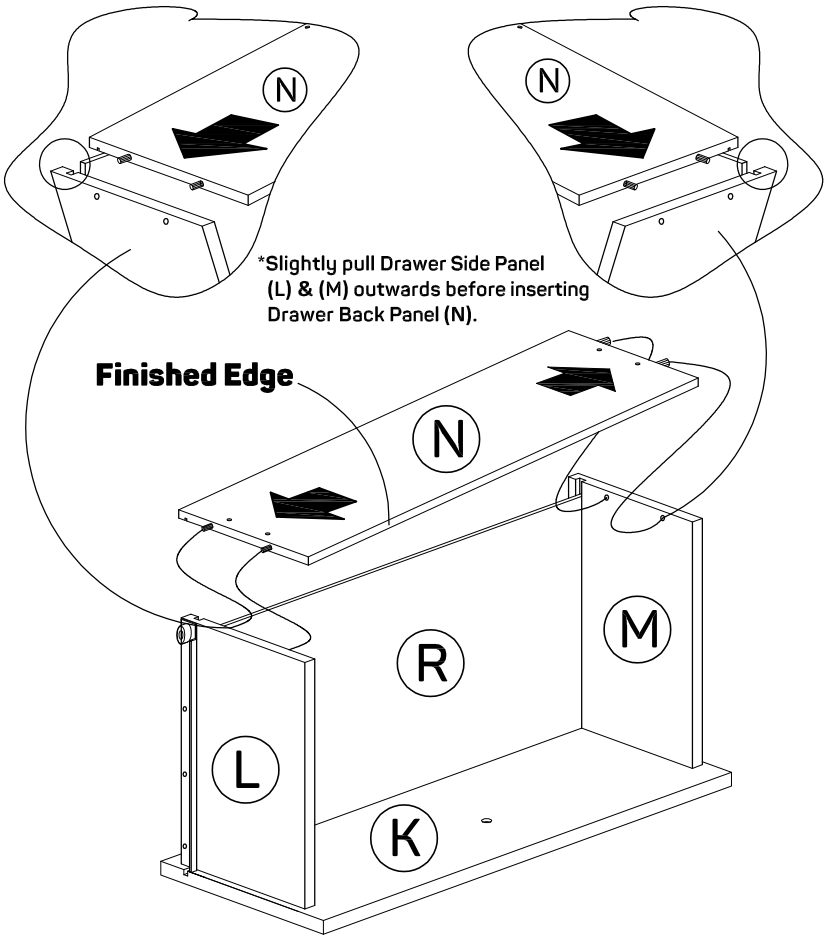

STEP 19

5 REAR CONNECTOR
4pcs

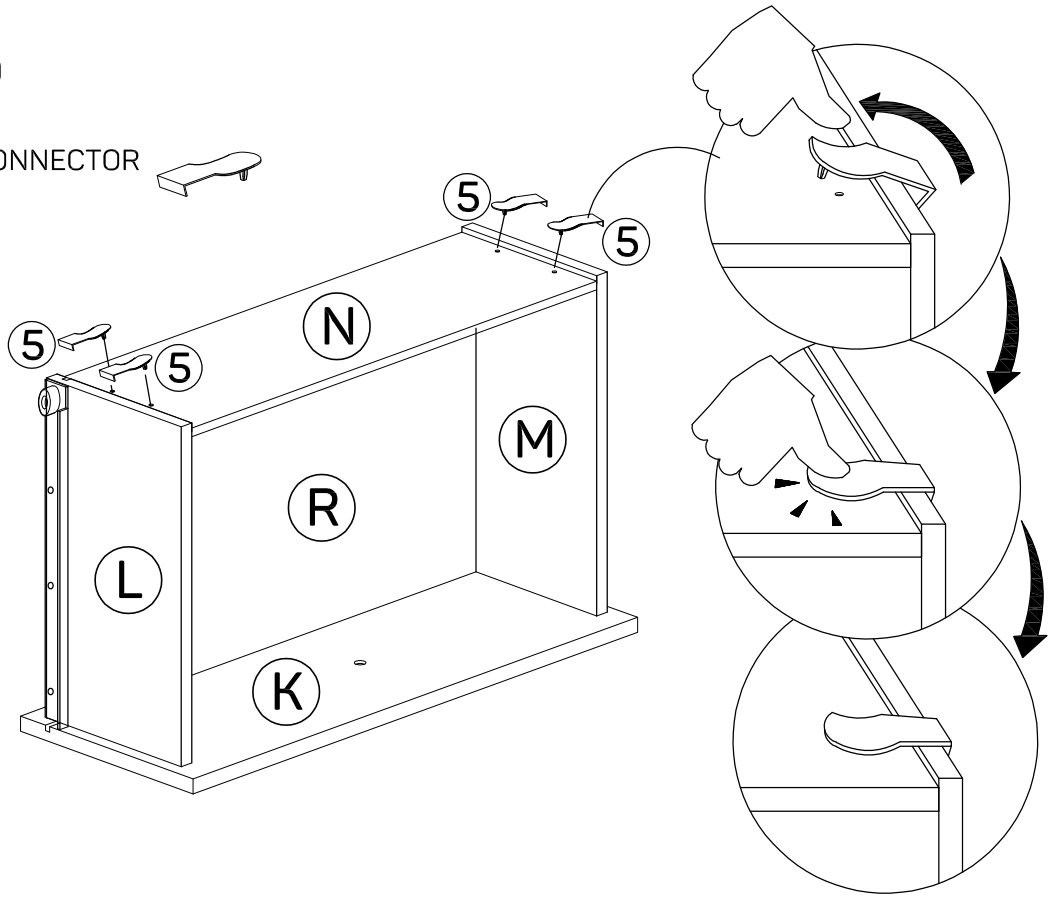

STEP 20

4 0.16'' x 0.98''
MACHINE SCREW
1pc

7 WOODEN KNOB
1pc

10 ALLEN KEY
1pc

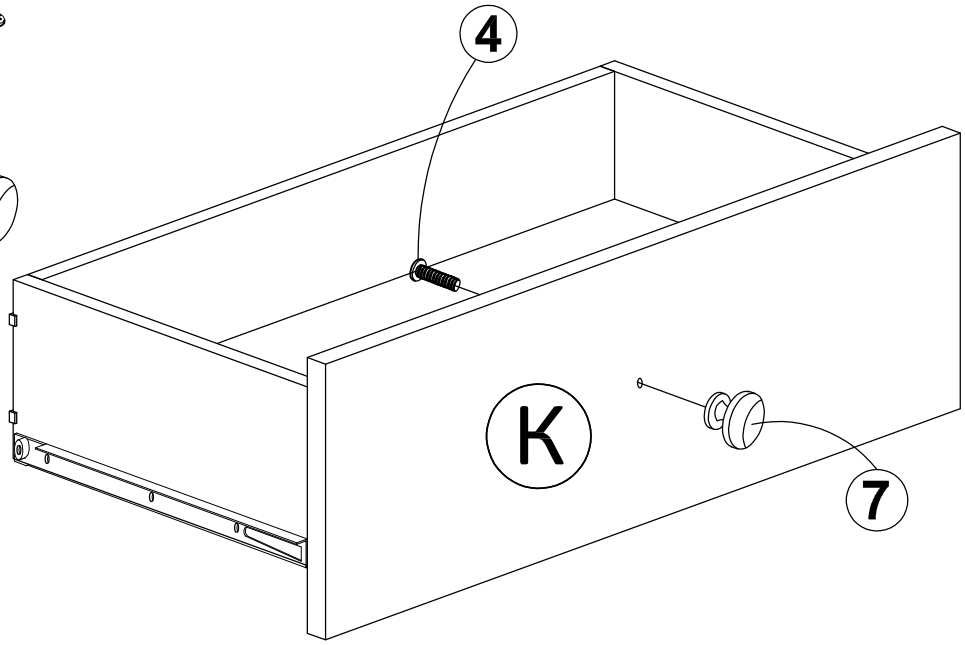

STEP 21

1 0.24'' x 1.18''
WOOD DOWEL
4pcs

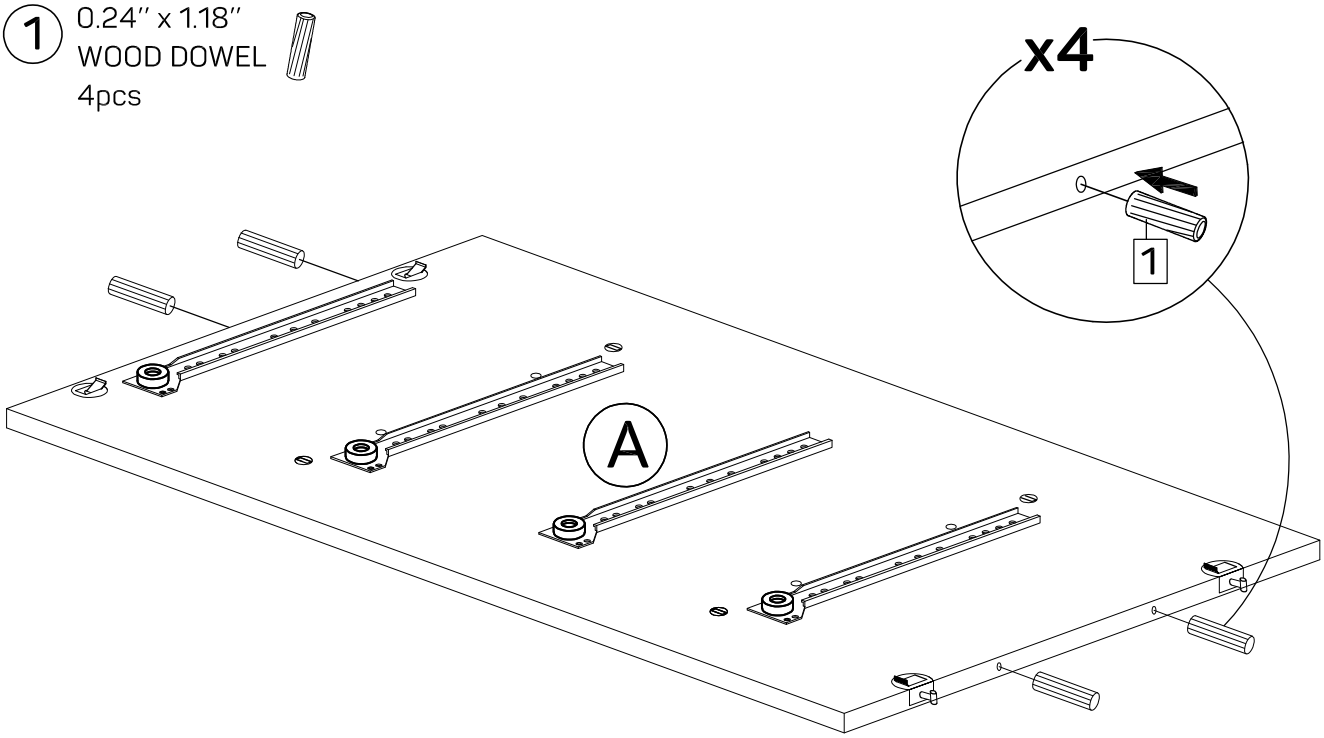

STEP 22

1 0.24'' x 1.18''
WOOD DOWEL
4pcs

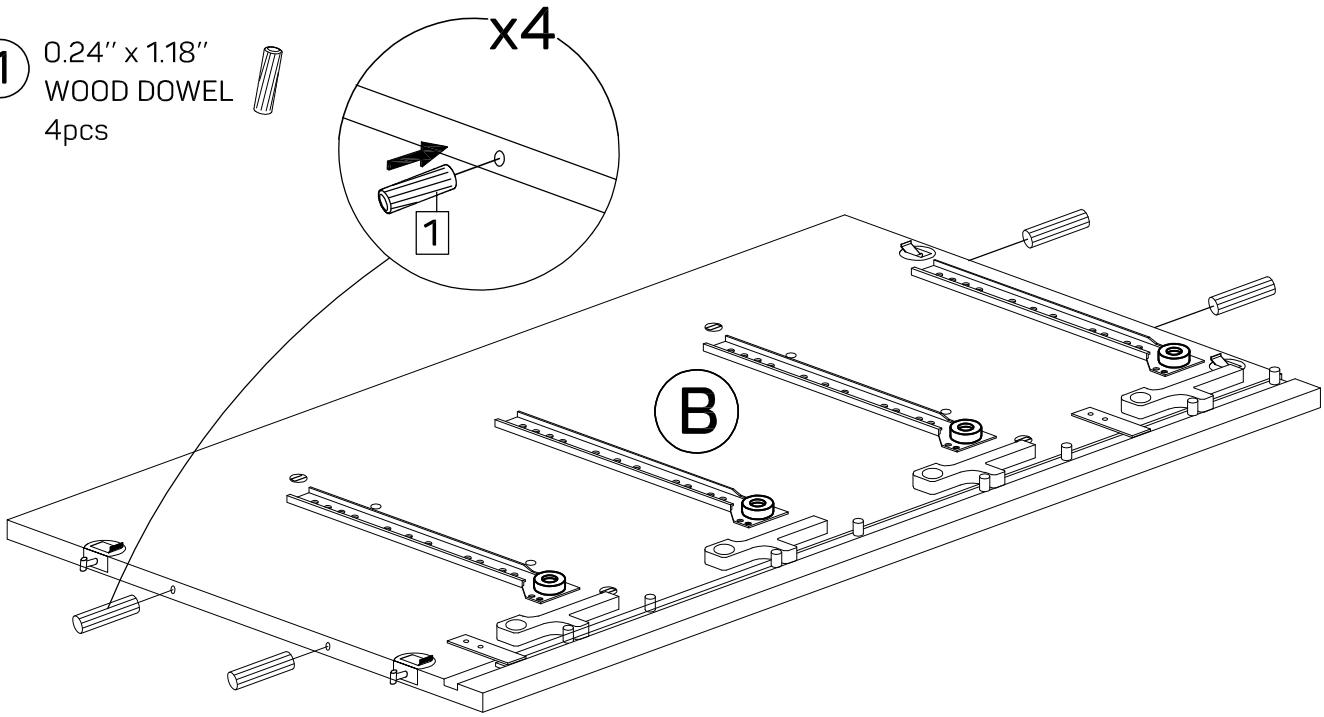

STEP 23

1 0.24'' x 1.18''
WOOD DOWEL
4pcs

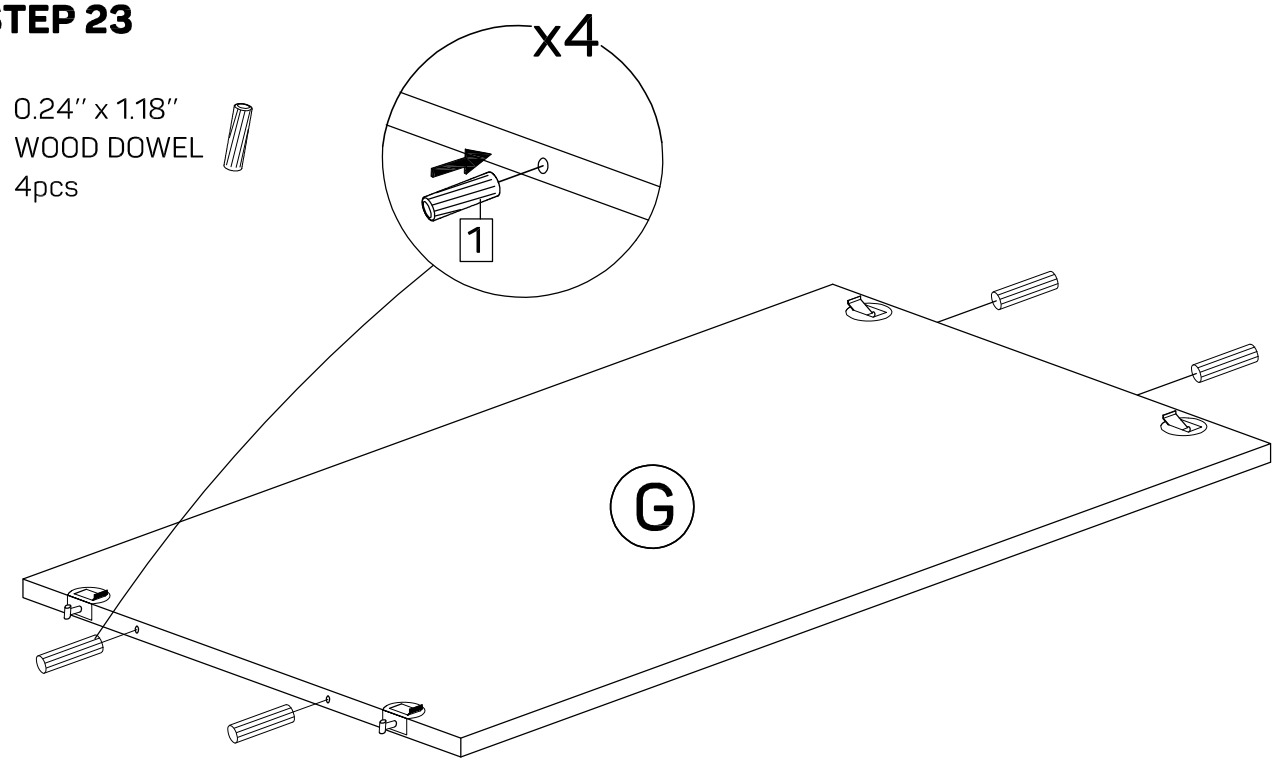

STEP 24

1 0.24'' x 1.18''
WOOD DOWEL
4pcs

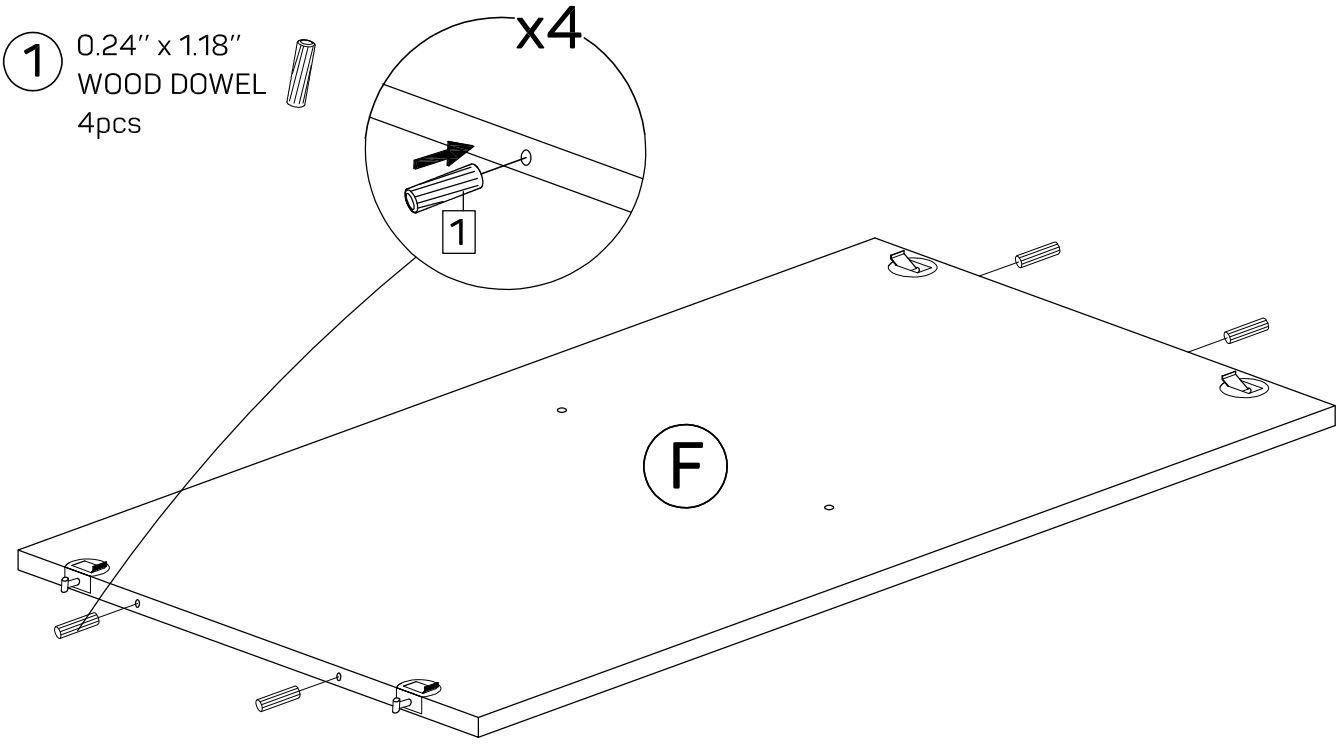

STEP 25

1 0.24'' x 1.18''
WOOD DOWEL
3pcs

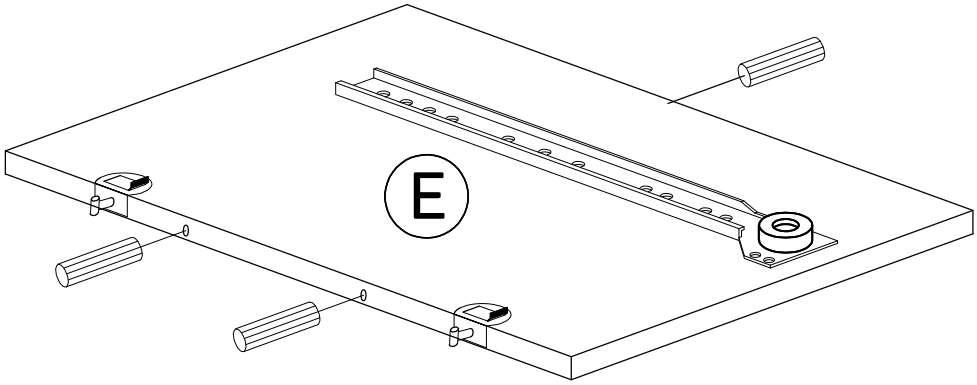

STEP 26

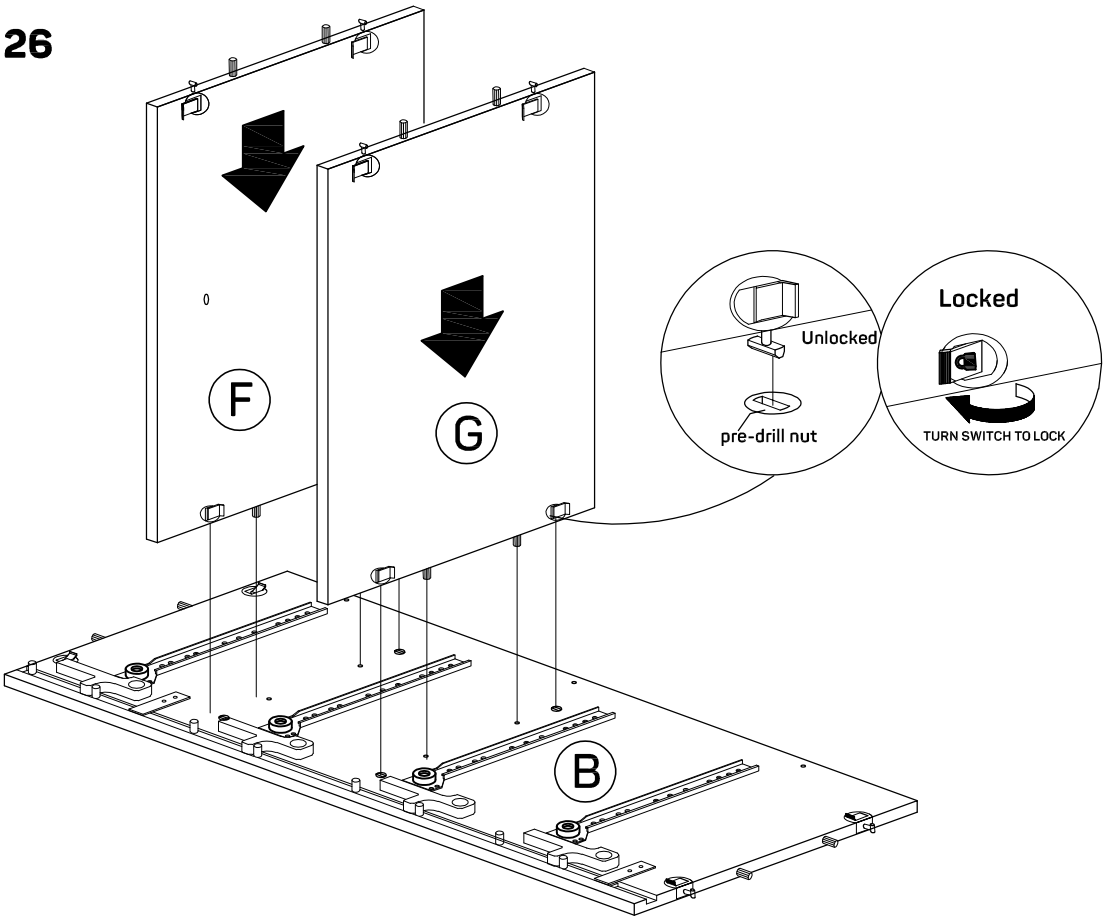

STEP 27

10 ALLEN KEY
1pc

11 0.24'' x 0.98''
SCREW
2pcs

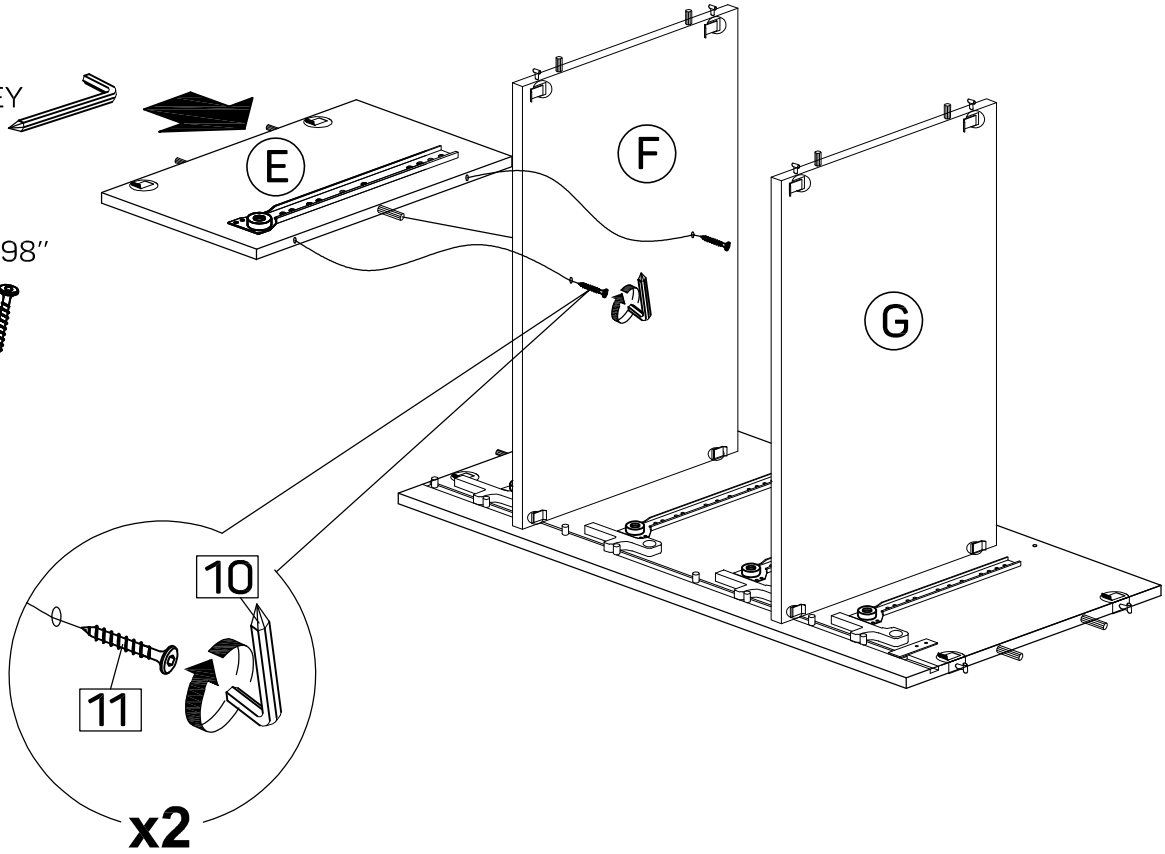

STEP 28

1 0.24'' x 1.18''
WOOD DOWEL
13pcs

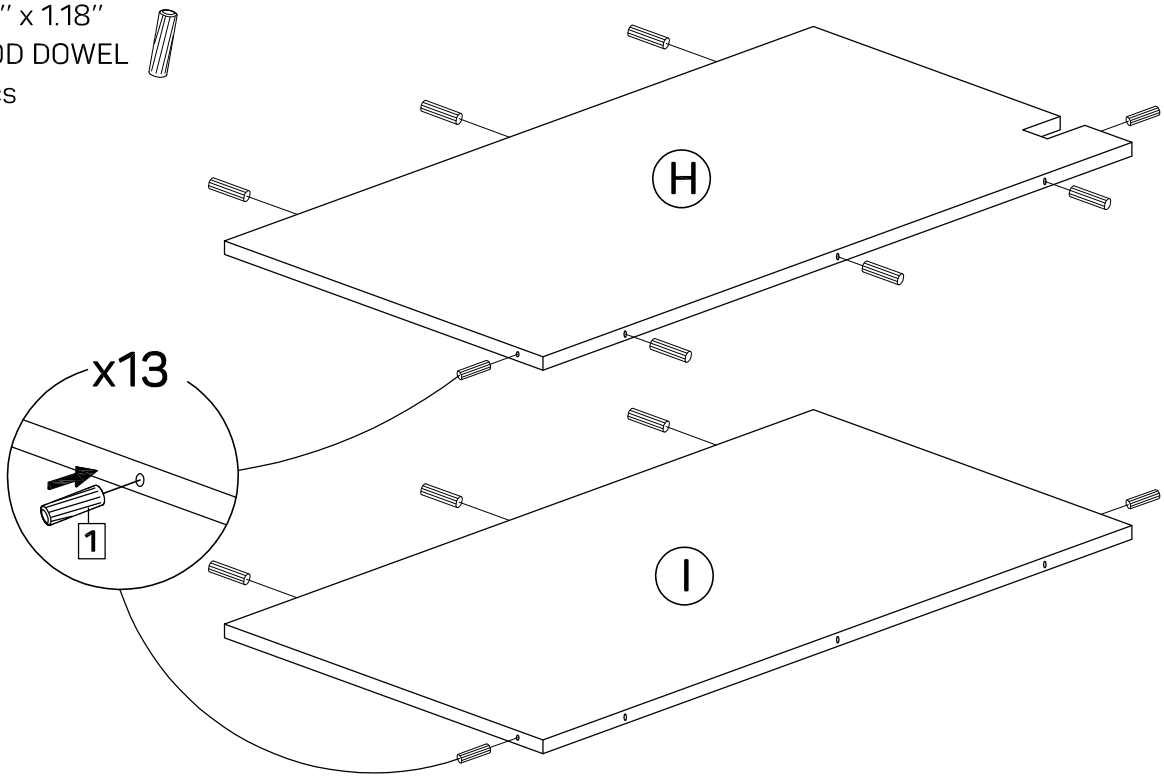

STEP 29

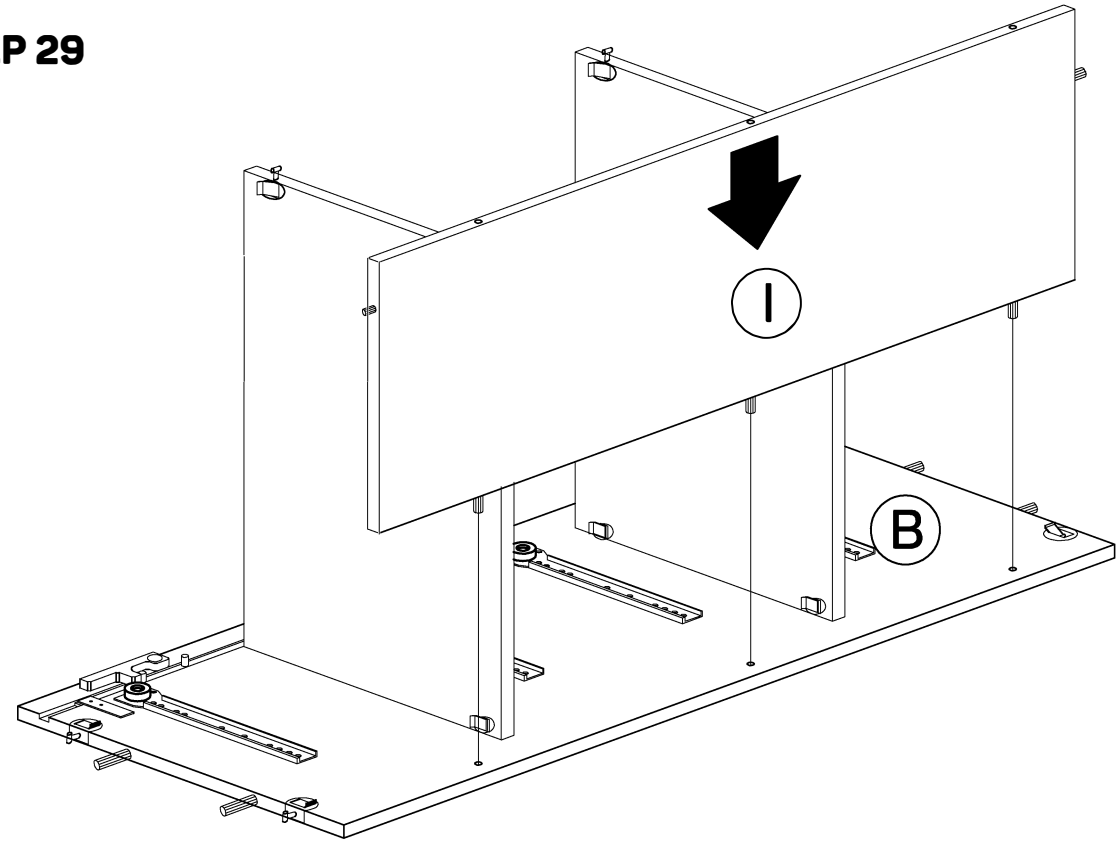

STEP 30

Note : Ensure notch in panel H is positioned correctly to accommodate safety bracket in Step 37.

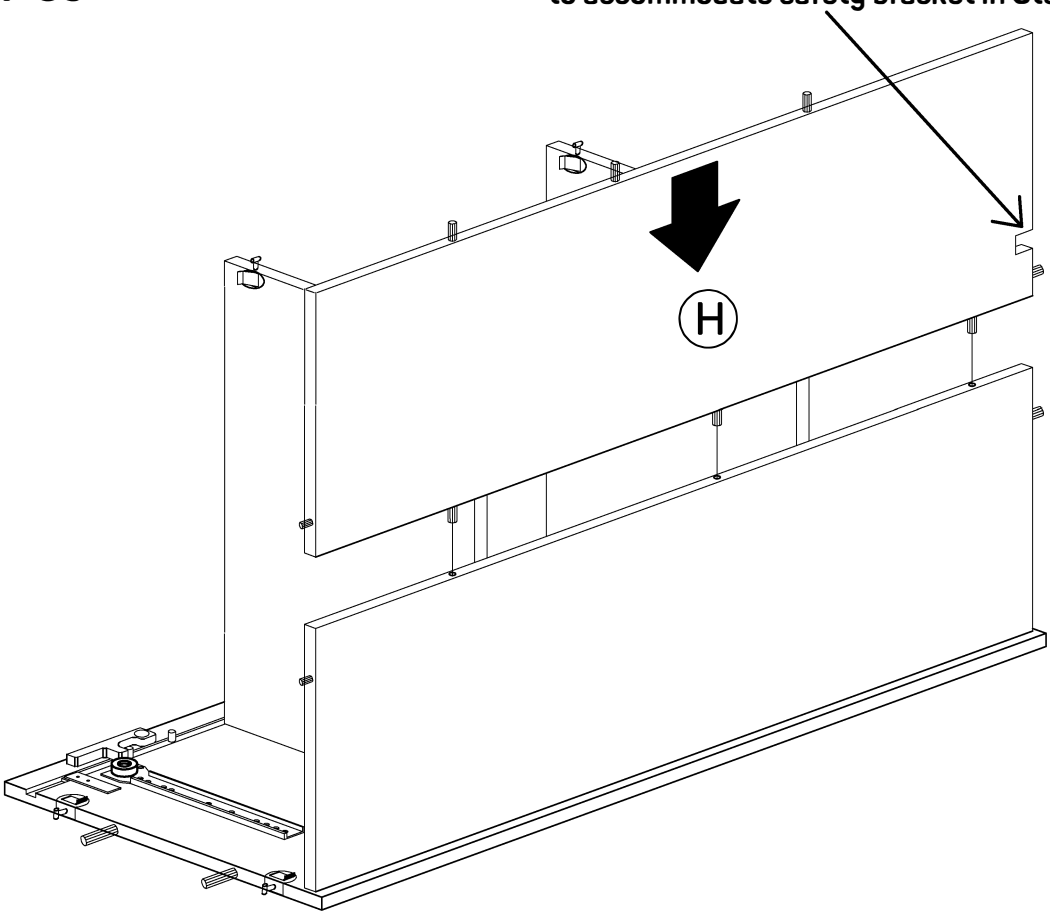

STEP 31

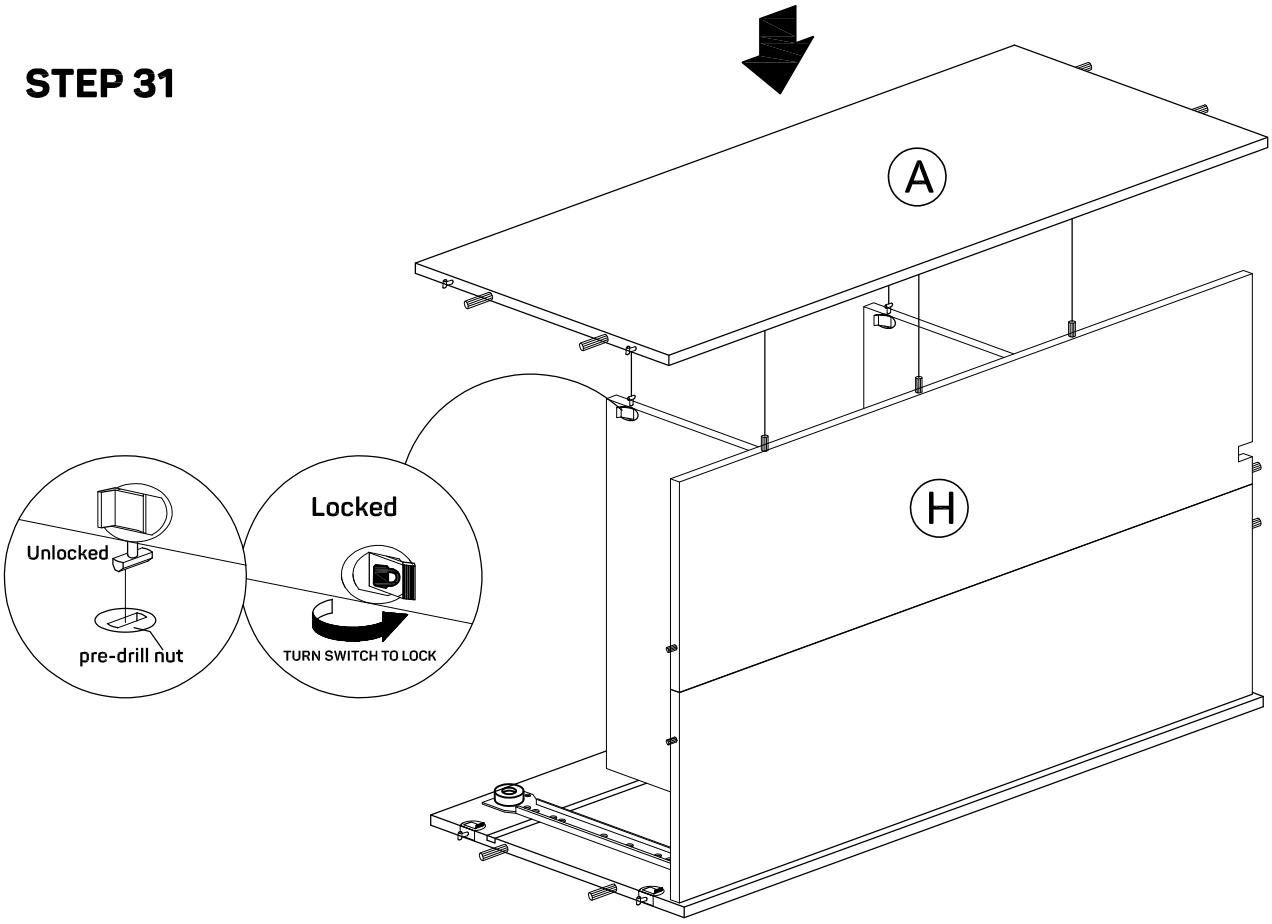

STEP 32

8 Ø34/58 x 5.9''
WOODEN LEG
4pcs

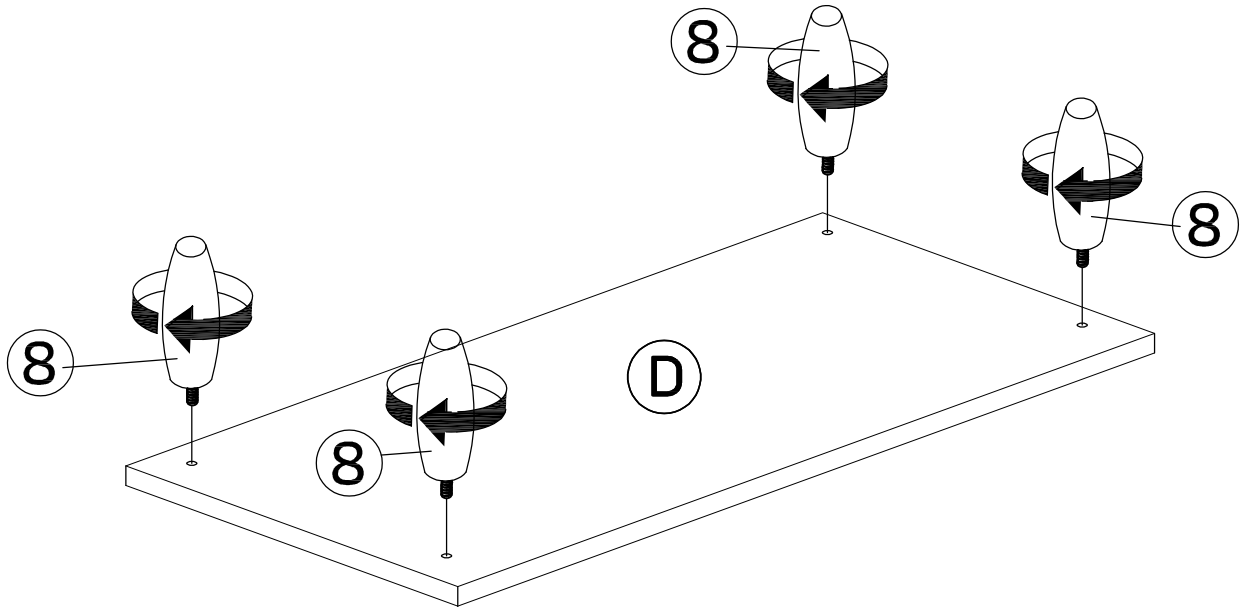

STEP 33

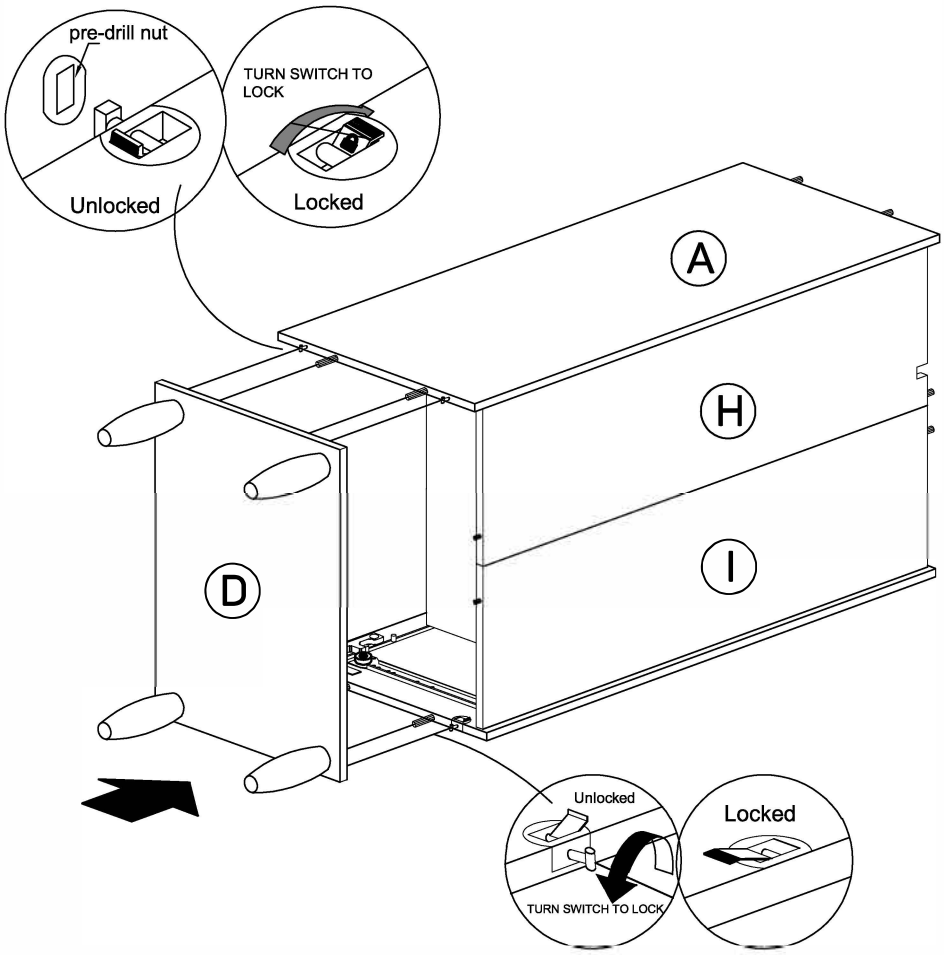

STEP 34

6 FLOOR GLIDE
4pcs

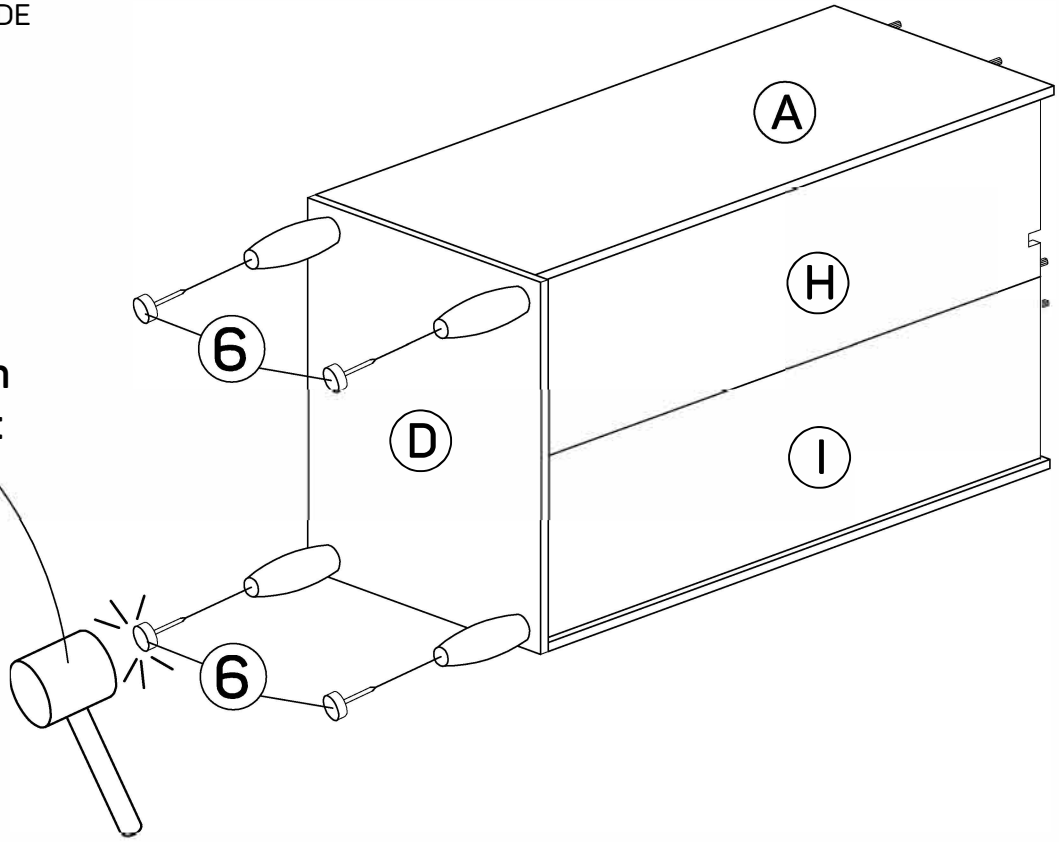

Gently tap the floor glides with a rubber mallet

STEP 35

9 SAFETY BRACKET KIT
1pc

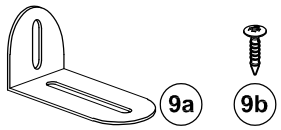

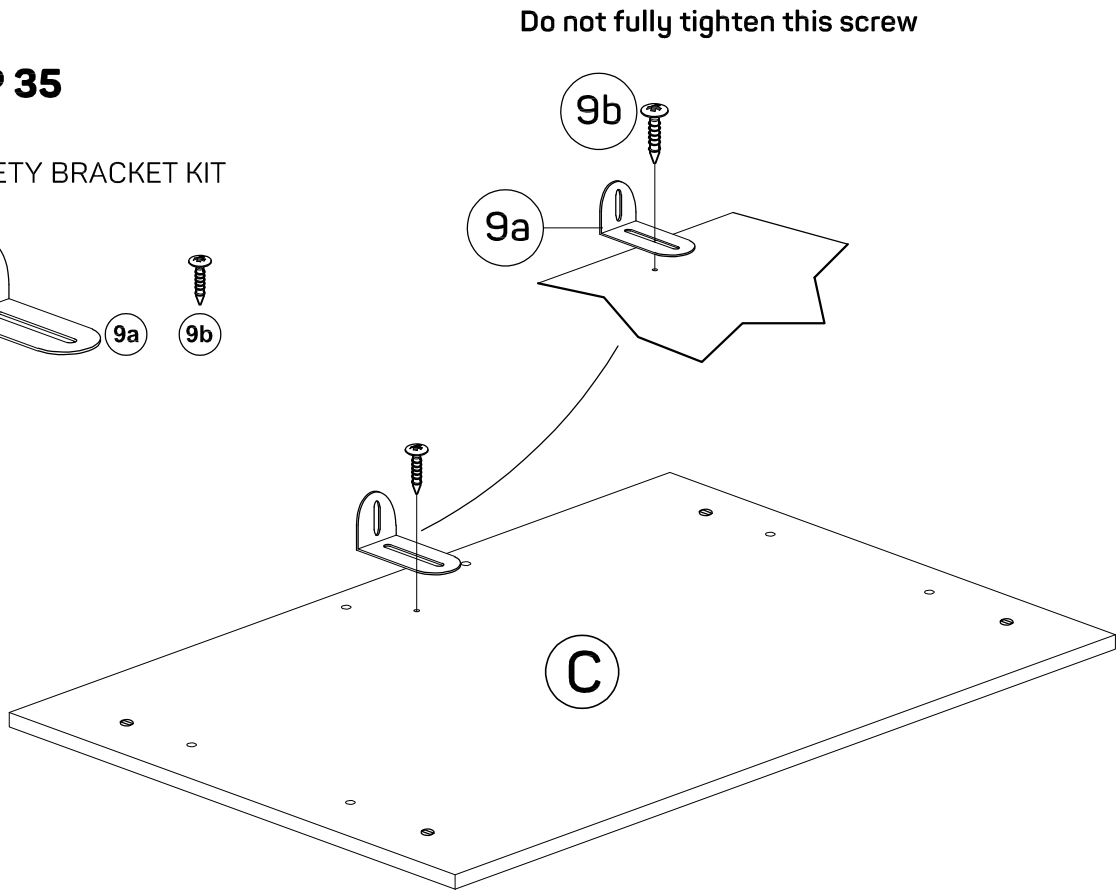

STEP 36

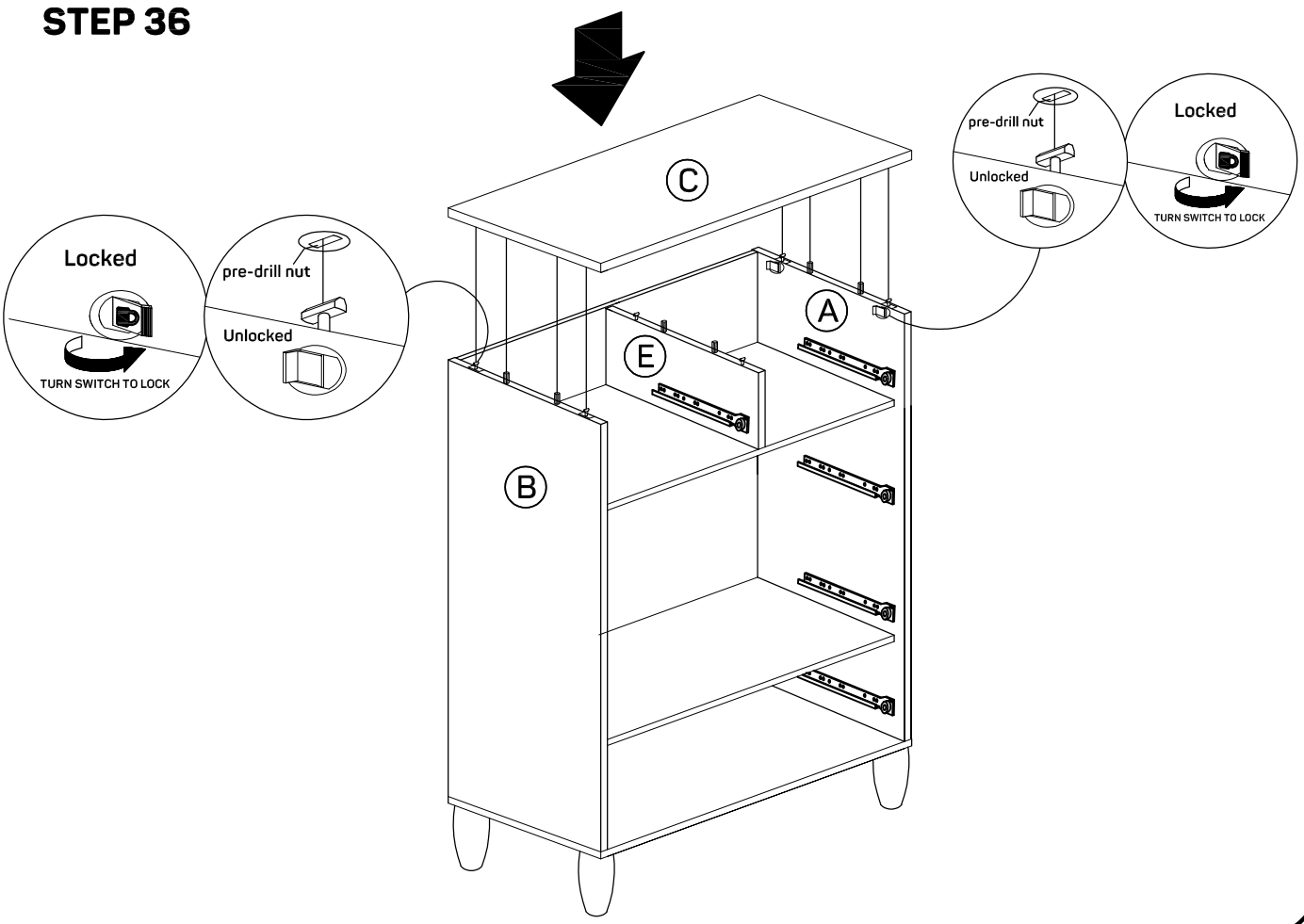

STEP 37

9 SAFETY BRACKET KIT
1pc

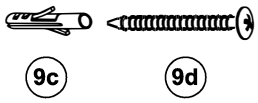

IMPORTANT: THIS UNIT MUST BE SECURE TO THE WALL TO HELP PREVENT TIPOVER. FOLLOW THESE INSTRUCTIONS TO INSTALL THE ANTI-TIPPING SAFETY BRACKET PROVIDED WITH THIS PRODUCT.

WARNING
Serious or fatal crushing injuries can occur from furniture tipover.
To prevent tipover:
- **Install tipover restraint provided**
- **Place heaviest items in the lowest drawers**
- **Unless specifically designed to accommodate, do not set TVs or other heavy objects on the top o this product**
- **Never allow children to climb or hang on drawers, doors or shelves**
- **Never open more than one drawer at a time**

Use or tipover restraints may only reduce, but not eliminate the risk of tipover.

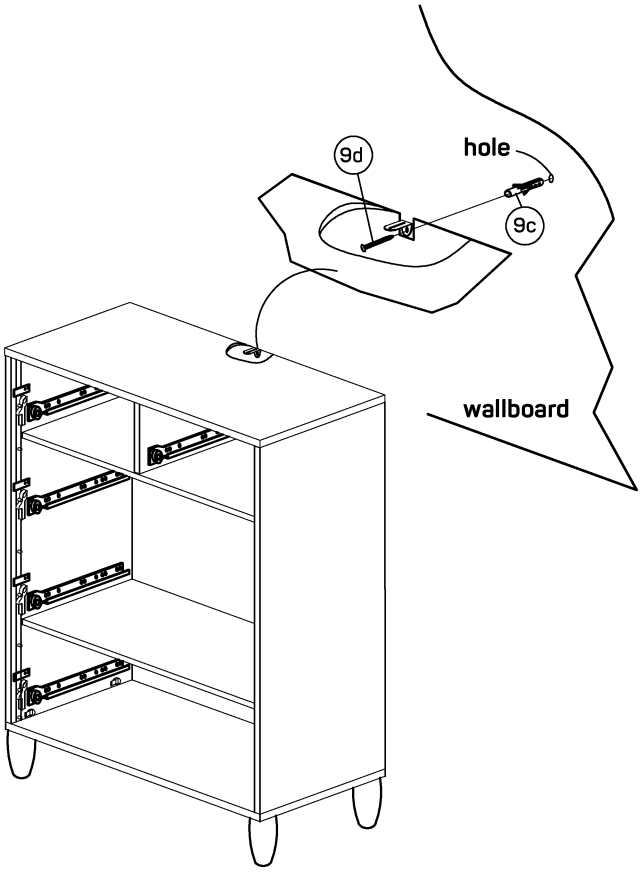

OPTION 1: Attachment into a wall stud (preferred method)
Using a stud finder, locate a stud in the wall. Place your unit against the wall, with the safety bracket aligned in this location. To make driving the screw easier, you can drill a 1/8" diameter pilot hole (3mm) through the safety bracket into the stud. Drive the screw through the safety bracket into the wall stud. Tighten the screw that was not fully tightened in step 35.

OPTION 2: Attachment into drywall
Locate your unit where desired against a wall and mark the wall through the safety bracket, then move your unit aside. Drill a 3/16" diameter hole (5mm) into the wallboard. Tap the wall anchor into the hole until it is flush. Move your unit into location and fasten the wall bracket to the wall anchor with the screw. Tighten the screw that was not fully tightened in step 35.

STEP 38

10 ALLEN KEY
1pc

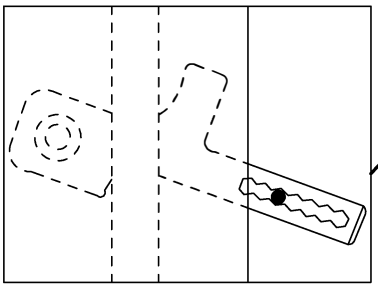

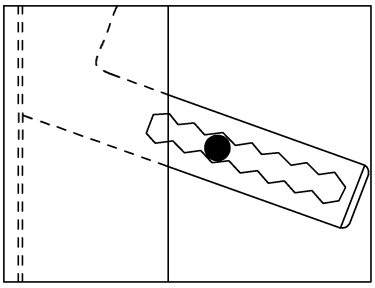

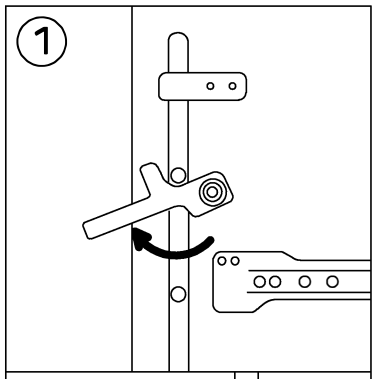

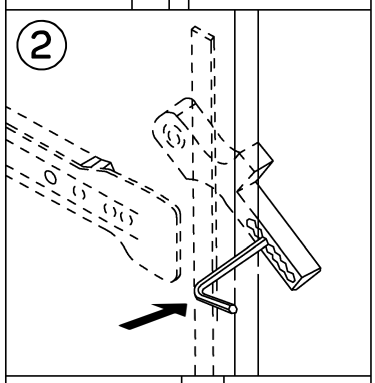

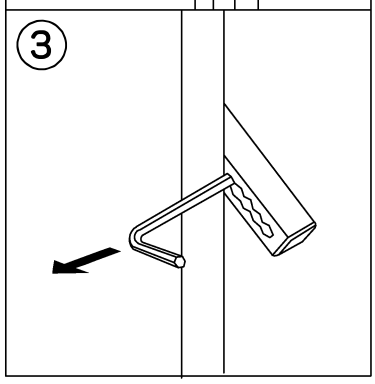

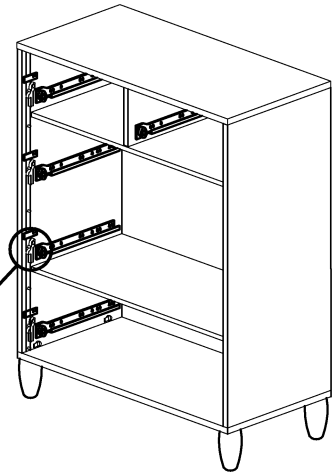

Note: Before inserting each drawer, lift the drawer lock on the inside of the left side panel and insert the Allen Key into the 5th hole. Partially insert drawer, remove the Allen Key from the lock and let it fall back into the cabinet then close the drawer.

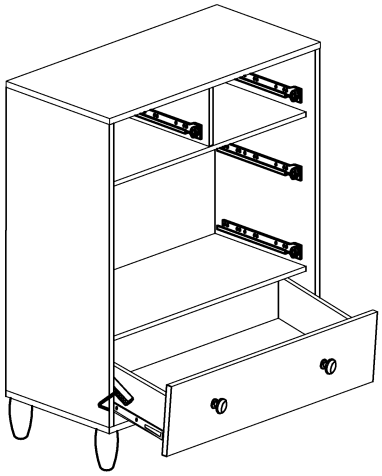

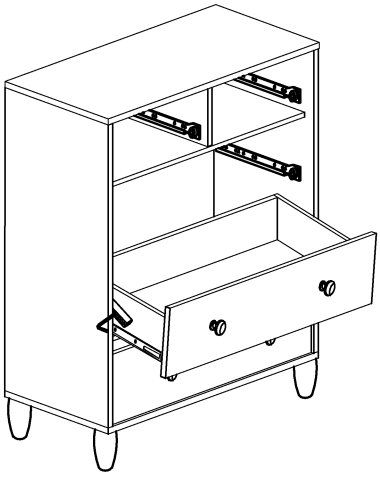

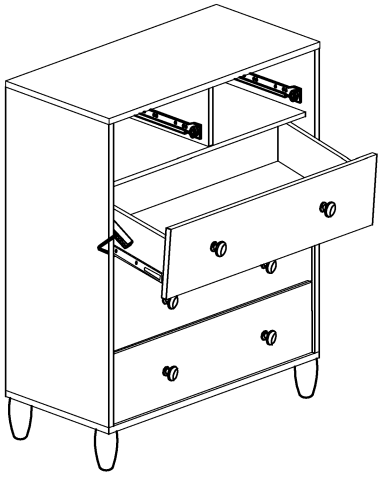

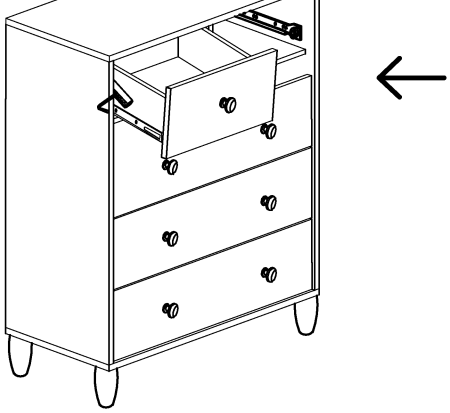

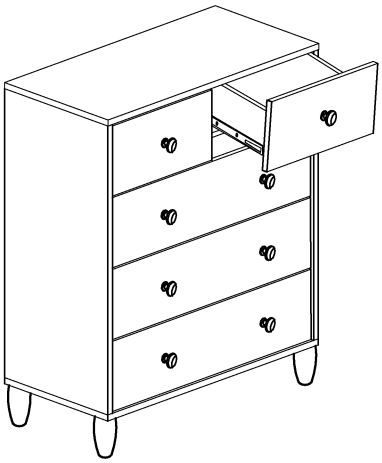

STEP 39

Quality and Safety Guidelines:

Please follow the static and dynamic weight capacity limits provided on this item. If you are unsure of the weight capacities for this product, email us at customerexperience@theubiguegroup.com or call 866-552-2810.

Please use this item on a stable, level surface only. All legs, feet and all parts of the base of this item should contact the flooring surface when in use. Do not use this item if any instability is detected.

Please install and use anti-tipping devices and wall anchor kits as instructed by the assembly instructions. Serious or fatal crushing injuries can occur from tipping furniture. The wall anchor kit is not a substitute for proper adult supervision. Use of the tip over restraints may only reduce, but not eliminate the risk of tip over.

The back panels must be used to make sure the unit is sturdy and safe.

Never push, pull or drag this product.

For maintenance instructions and replacement parts, please email us at customerexperience@theubiguegroup.com or call 866-552-2810.

This item is intended as a dresser only, do not climb, hang, stand or sit on this item. Do not climb, pull or hang on drawers. Do not use this item as a TV stand. Do not place heavy objects on top of this product. Never open more than one drawer at a time.

Keep fingers away from the hinge line clearance and away from all edges of the drawers when opening and closing the drawers to avoid pinching.

Place heaviest items in the lowest drawers.

The item is intended to be used indoors.

Please inspect this product regularly to make sure there are no damaged or worn parts. Also inspect to make sure all hardware is tightened correctly and securely. For inspection instructions, please email us at customerexperience@theubiguegroup.com or call 866-552-2810.

If any parts are damaged or worn, please stop using the product. Repair this product with manufacturer supplied parts only.

For product longevity, product safety and product integrity, protect from wet and humid weather or other wet, humid or moist conditions and store indoors in a dry location. For additional storage and usage instructions, please email us at customerexperience@theubiguegroup.com or call 866-552-2810.

Please visit www.theubiguegroup.com for our product warranty details or email us at customerexperience@theubiguegroup.com or call 866-552-2810.