Instruction Manual

Glass Door Base Cabinet

889142951124
889142949756

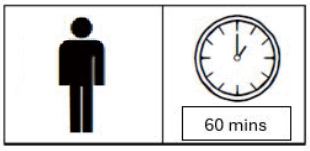

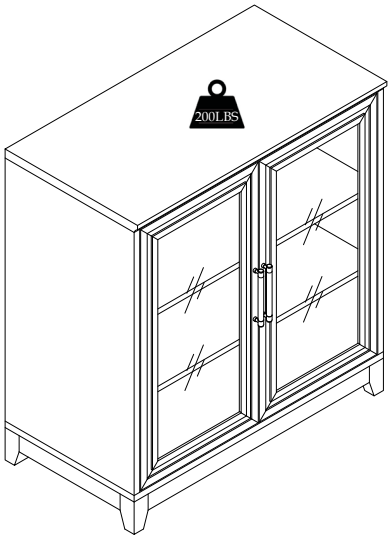

ASSEMBLY INSTRUCTIONS

Before You Begin: Phillips screwdriver required (Not Included).

Please identify all component parts and hardware pieces required before you begin. Carefully remove all of the components from the packaging and set aside for assembly. Assemble on a clean surface to prevent scratching during assembly.

Caution:

Tighten all components securely before use. Failure to do so may result in personal injury.
DO NOT use any sharp objects to open plastic wrapped components as damage to product or components may result.

Warning:

CHOKING HAZARD - Small Parts. Adult Assembly Required.

Serious or fatal injuries can occur from furniture tipping over. You must install Tipping Restraint Hardware (where included) to help prevent the unit from tipping and causing accidental injury, instability, death or damage. The tipping restraint is intended only as a safety measure, it is not a substitute for proper adult supervision. To help prevent furniture from tipping over it must be permanently attached to the wall. Anti-Tip Safety Wall Straps suitable for the unit weight and wall materials (if not included) should be purchased and installed.

Failure to detach this restraint before moving furniture may result in injury or damage.

DO NOT ALLOW CHILDREN TO CLIMB ON FURNITURE

Customer Service Email: CustomerExperience@theubiquegroup.com | Phone: 866-552-2810

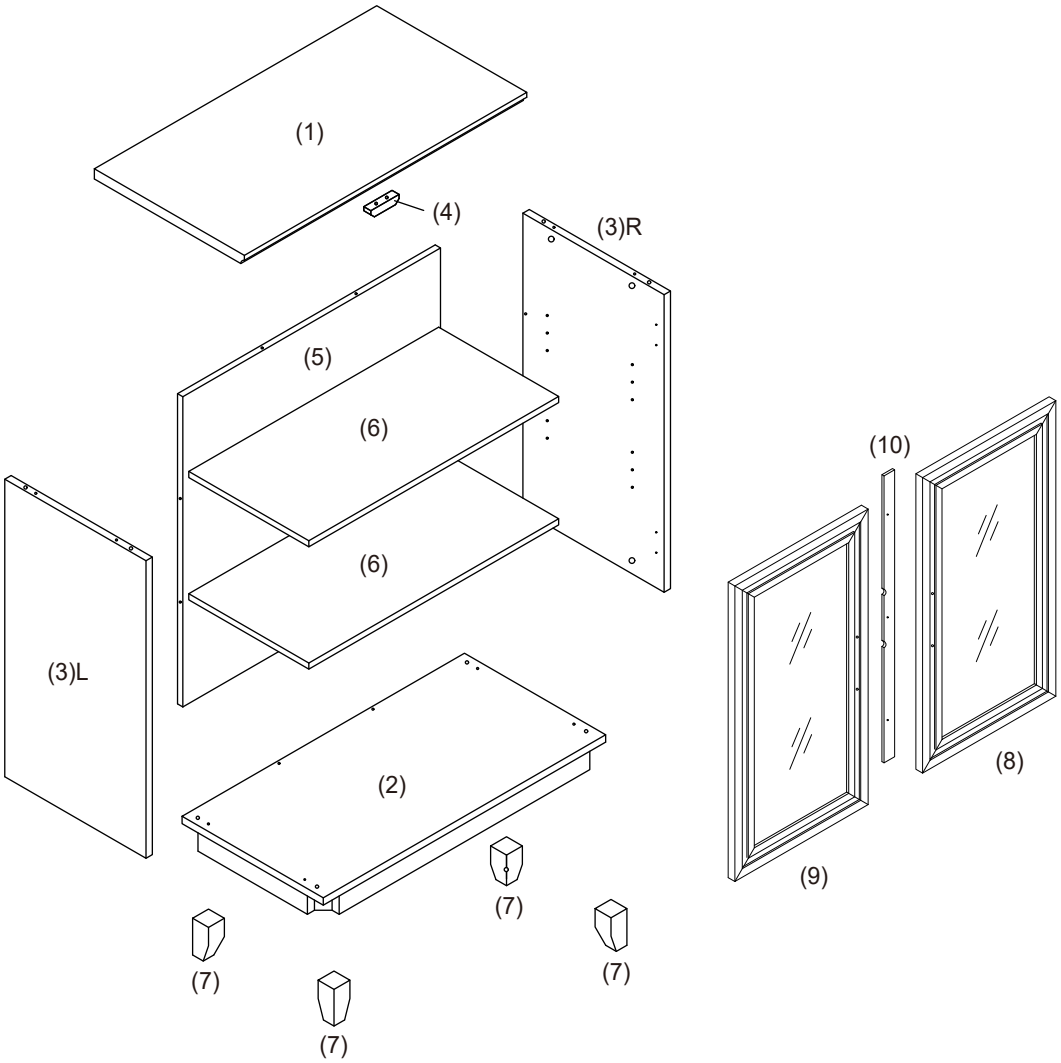

PARTS

(1)X1	(2)X1	(3)X2	(4)X1	(5)X1	(6)X2	(7)X4	(8)X1
Top Panel	Bottom Panel	L R Side Panel (L&R)	Door Stopper	Back Panel	Shelf	Leg	Right Door
(9)X1	(10)X1						
Left Door	Door Trim						

HARDWARE

(A)X8	(B) **Hardware Packet Contents**		(C)X8	(D)X2	(E) **Hardware Packet Contents**		
Wood Dowel M8 x 30mm	(B1)X16 Male Camlock	(B2)X16 Female Camlock	Metal Shelf Support	CSK Screw M4 x 32mm	(E1)X4 JCBB M8 x 60mm	(E2)X4 Spring Washer	(E3)X4 Flat Washer
(F)X1	(G)X4	(H)X27	(I) **Hardware Packet Contents**		Use if needed. See anti-tip kit packaging for instructions.		
Allen Wrench M5	Soft Close Hinges 7/8	CSK Screw M3.5 x 16mm	(I1)X2 Handle	(I2)X4 Handle Screw	Anti-Tip Hardware		

STEP 1

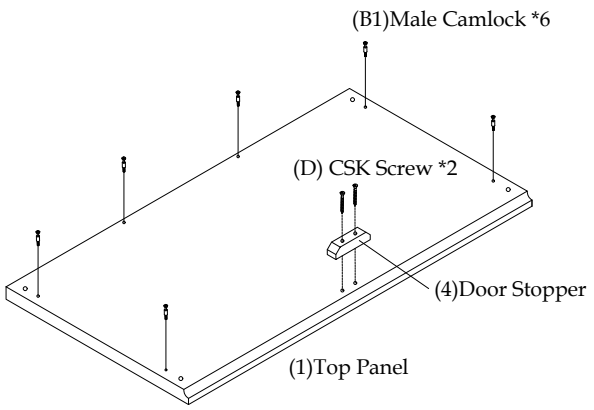

STEP 2

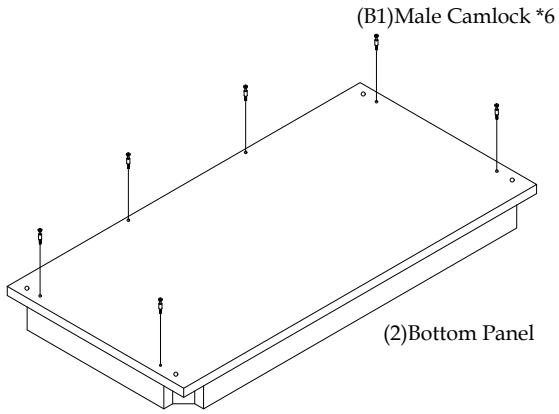

STEP 3

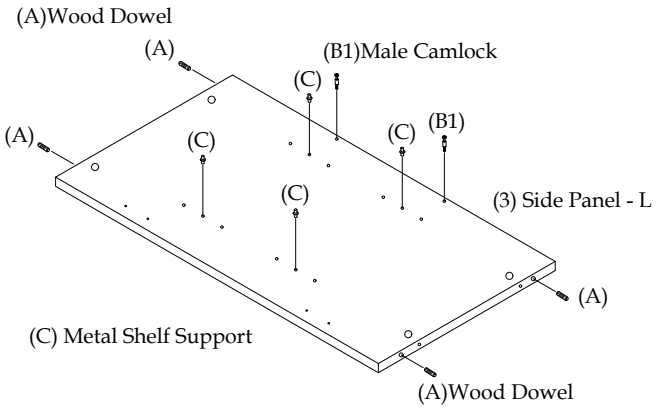

STEP 4

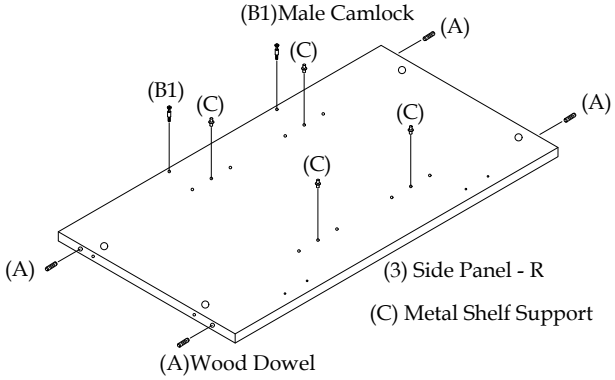

STEP 5

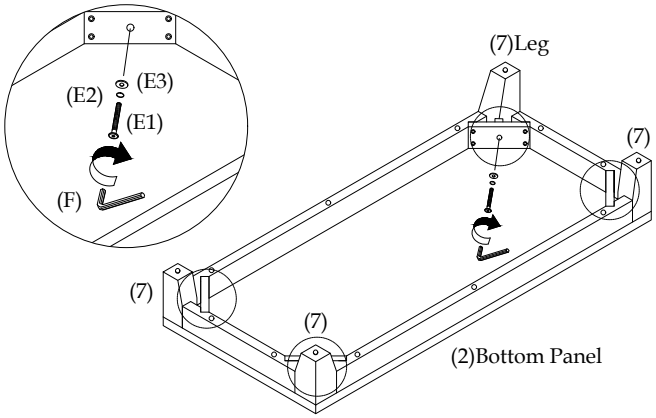

STEP 6

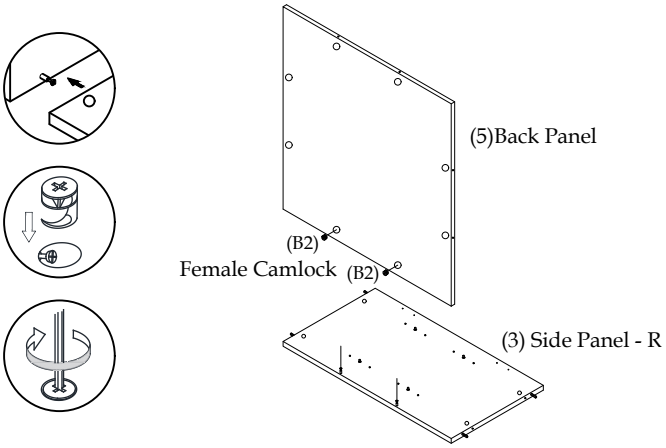

STEP 7

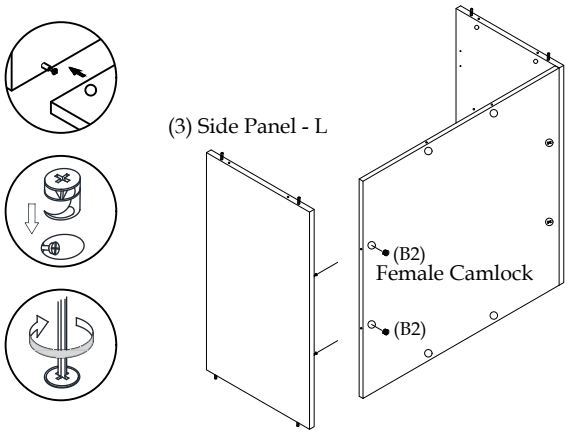

STEP 8

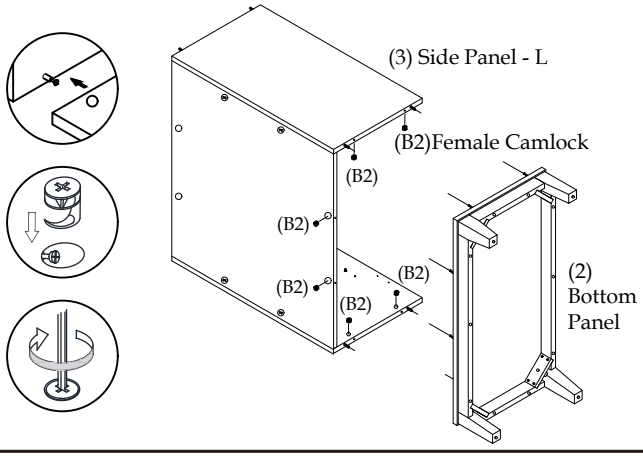

STEP 9

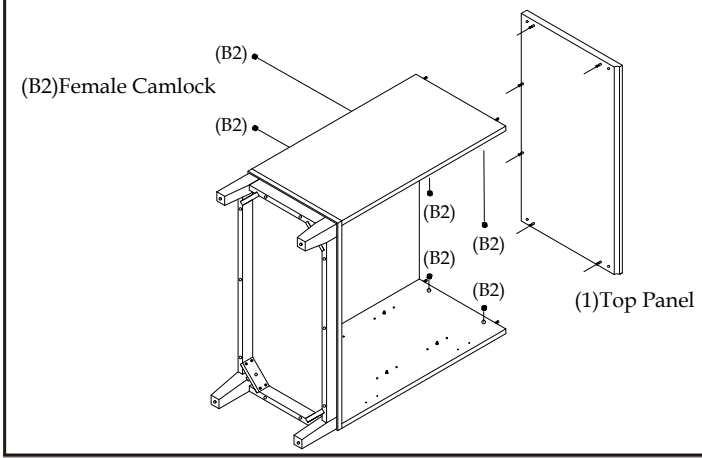

STEP 10

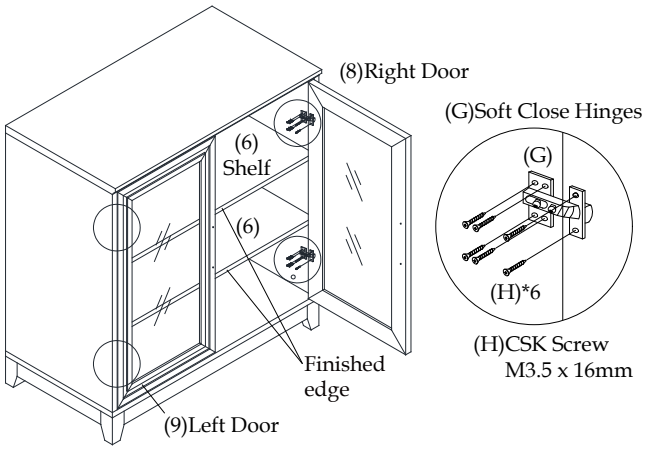

STEP 11

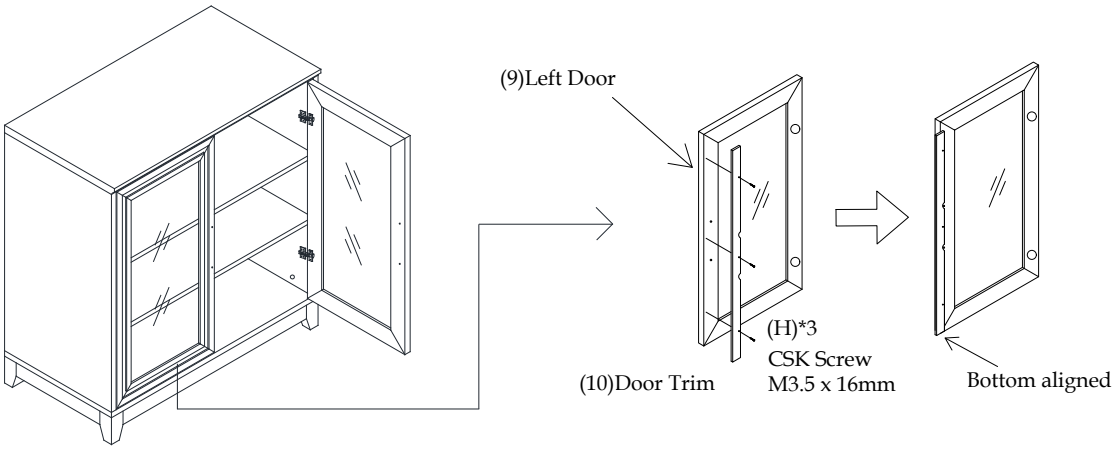

STEP 12

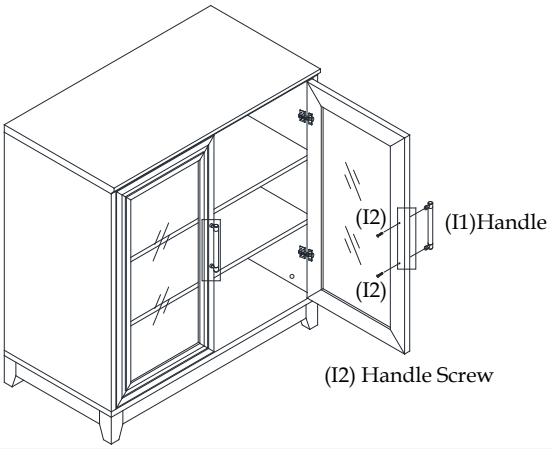

COMPLETED

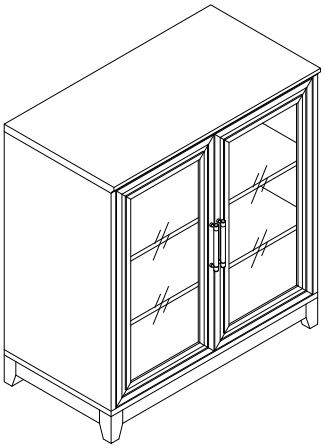

DOOR ADJUSTMENT

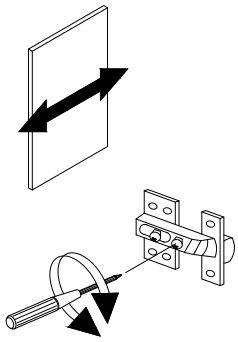

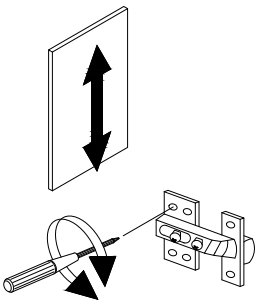

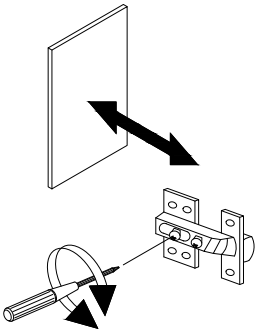

Important:

This furniture includes an anti-tipping kit to help prevent tip-over accidents.

Use is recommended for safety, especially if children are present.

Use the anti-tipping kit as seen in the diagram below. Choose a suitable wall fixing that matches your wall style and then fasten the strap to the wall as shown using appropriate fixings.

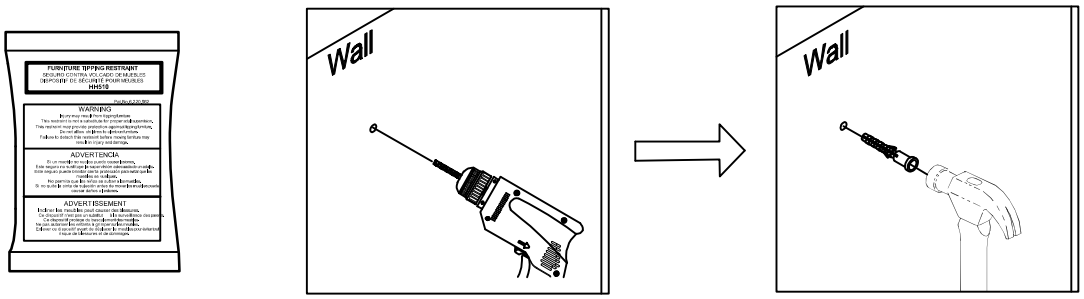

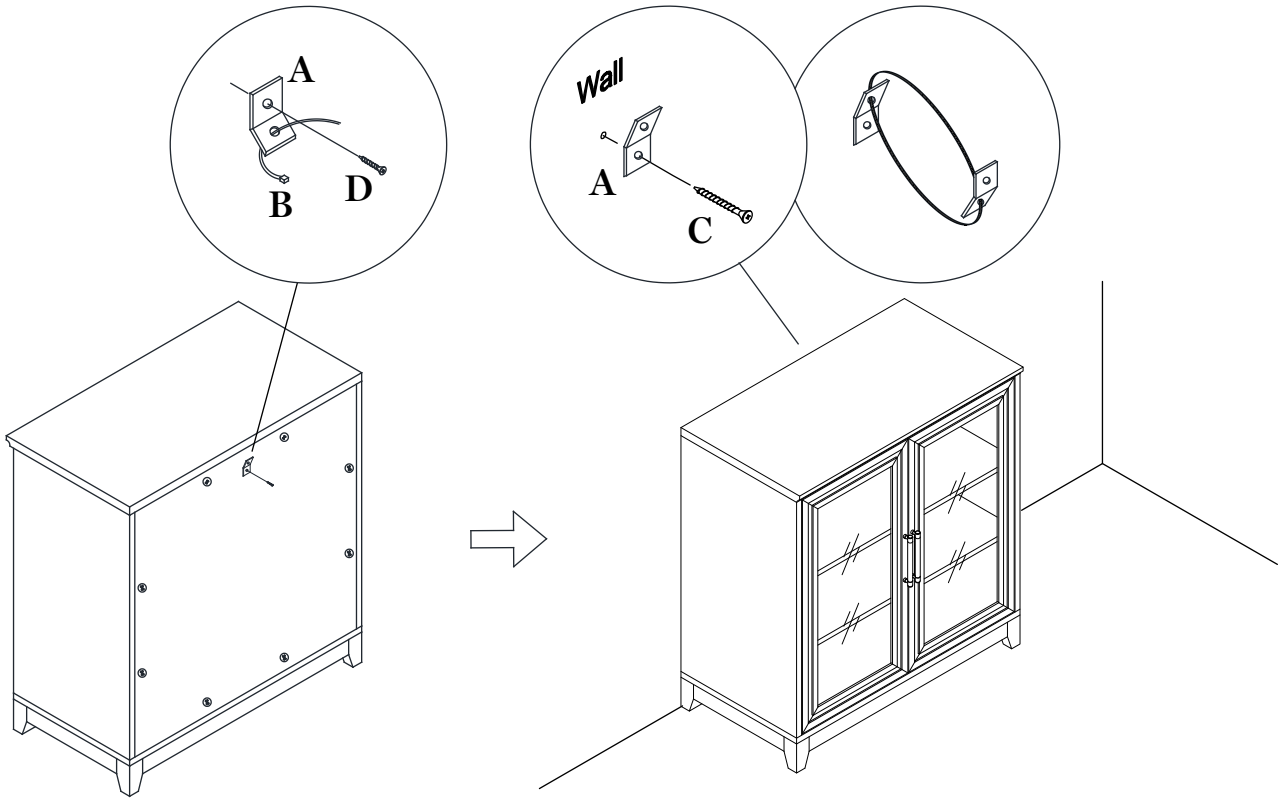

Quality and Safety Guidelines

• Please follow the static and dynamic weight capacity limits provided on this item. If you are unsure of the weight capacities for this product, email us at customerexperience@theubiquegroup.com or call 866-552-2810.

• Please use this item on a stable, level surface only. All parts of the base should contact the flooring surface when in use.

• Do not use this item if any instability is detected.

• This item is intended as a cabinet only, do not climb, stand or sit on this item.

• Do not use this item as a TV stand.

• To prevent pinching or crushing injuries, please ensure fingers are away from the sides of the doors when closing.

• Do not push or pull this item to move it, team lift to reposition.

• The item is intended to be used indoors.

• For maintenance instructions and replacement parts, please email us at customerexperience@theubiquegroup.com or call 866-552-2810.

• Please review and retain all assembly instructions, safety and quality guidelines and product warnings for future reference.

• For product longevity, product safety and product integrity, protect from wet or humid weather and store indoors in a dry location. For additional storage instructions, please email us at customerexperience@theubiquegroup.com or call 866-552-2810.

• Please visit www.theubiquegroup.com for our product warranty details or email us at customerexperience@theubiquegroup.com or call 866-552-2810.

• Please inspect this product regularly to make sure there are no damaged or worn parts. Also inspect to make sure all hardware is tightened correctly and securely. For inspection instructions, please email us at customerexperience@theubiquegroup.com or call 866-552-2810.

• If any parts are damaged or worn, please stop using the product. Repair this product with manufacturer supplied parts only.

Instruction Manual

3 Drawer Base Cabinet

889142951117
889142949657

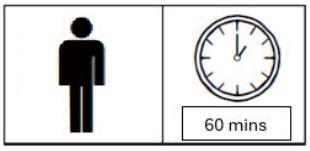

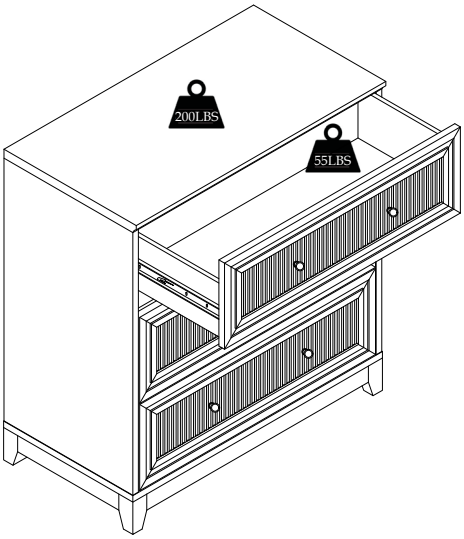

ASSEMBLY INSTRUCTIONS

Before You Begin: Phillips screwdriver required (Not Included).

Please identify all component parts and hardware pieces required before you begin. Carefully remove all of the components from the packaging and set aside for assembly. Assemble on a soft surface to prevent scratching during assembly.

Caution:

Tighten all components securely before use. Failure to do so may result in personal injury.
DO NOT use any sharp objects to open plastic wrapped components as damage to product or components may result.

Warning:

CHOKING HAZARD - Small Parts. Adult Assembly Required.

Serious or fatal injuries can occur from furniture tipping over. You must install Tipping Restraint Hardware (where included) to help prevent the unit from tipping and causing accidental injury, instability, death or damage. The tipping restraint is intended only as a safety measure, it is not a substitute for proper adult supervision. To help prevent furniture from tipping over it must be permanently attached to the wall. Anti-Tip Safety Wall Straps suitable for the unit weight and wall materials (if not included) should be purchased and installed.

Failure to detach this restraint before moving furniture may result in injury or damage.

DO NOT ALLOW CHILDREN TO CLIMB ON FURNITURE

Customer Service Email: CustomerExperience@theubiquegroup.com | Phone: 866-552-2810

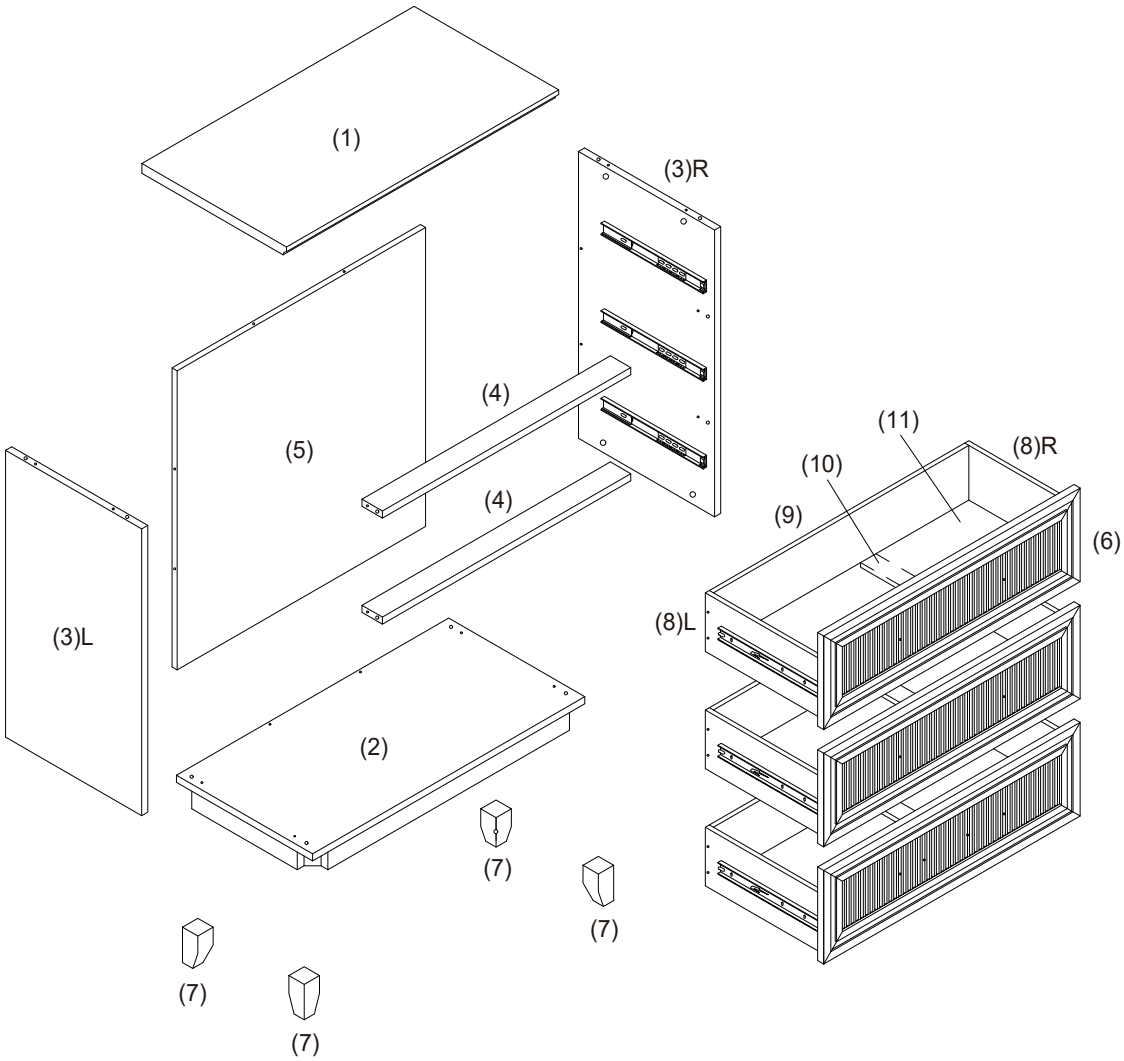

PARTS

(1)X1	(2)X1	(3)X2	(4)X2	(5)X1	(6)X3	(7)X4	(8)X6
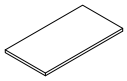	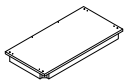	L R		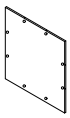			L R
Top Panel	Bottom Panel	Side Panel (L&R)	Support Rail	Back Panel	Drawer Front	Leg	Drawer Side (L&R)
(9)X3	(10)X3	(11)X3					
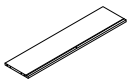		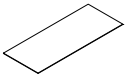					
Drawer Back	Drawer Base Support	Drawer Base					

HARDWARE

(A)X36	(B) **Hardware Packet Contents**		(C)X12	(D)X1	(E) **Hardware Packet Contents**
	(B1)X38	(B2)X38			(E1)X4 / (E2)X4 / (E3)X4
Wood Dowel M8 x 30mm	Male Camlock	Female Camlock	CSK Screw M4 x 32mm	Allen Wrench M5	JCBB M8 x 60mm / Spring Washer / Flat Washer

(F) **Hardware Packet Contents**	Use if needed. See anti-tip kit packaging for instructions.
(F1)X6 / (F2)X6	
	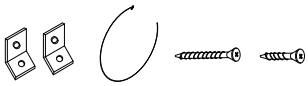
Handle / Handle Screw	Anti-Tip Hardware

STEP 1

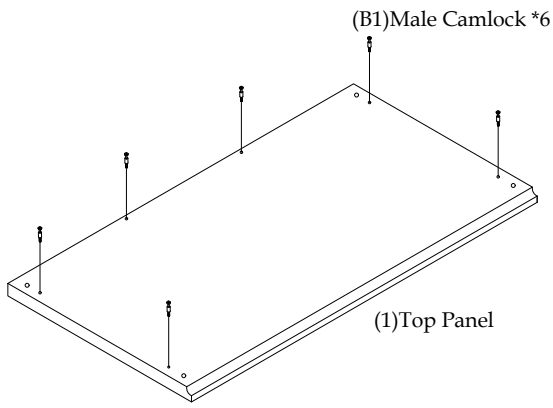

STEP 2

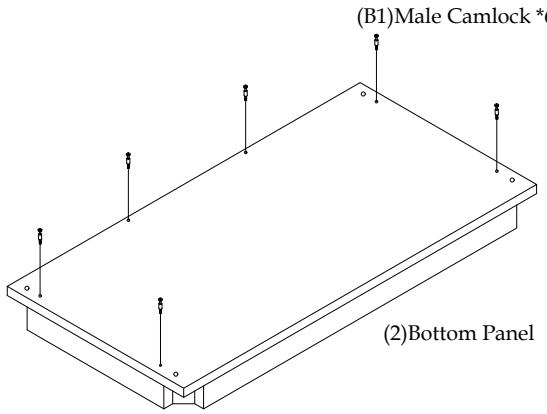

STEP 3

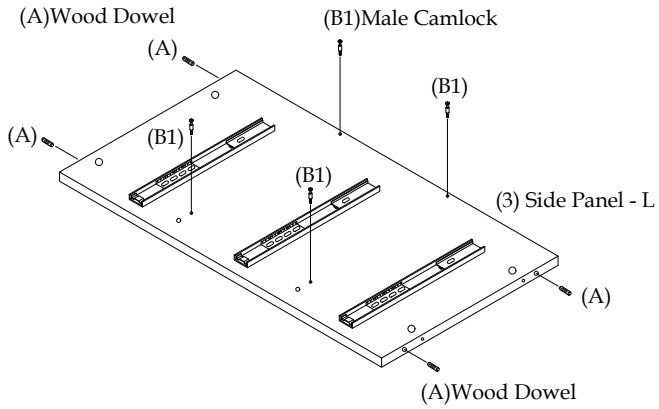

STEP 4

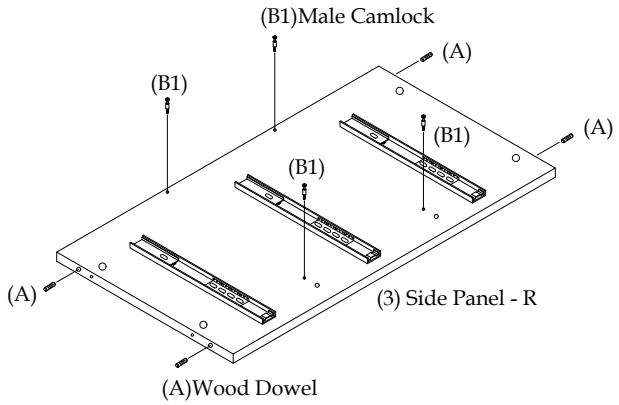

STEP 5

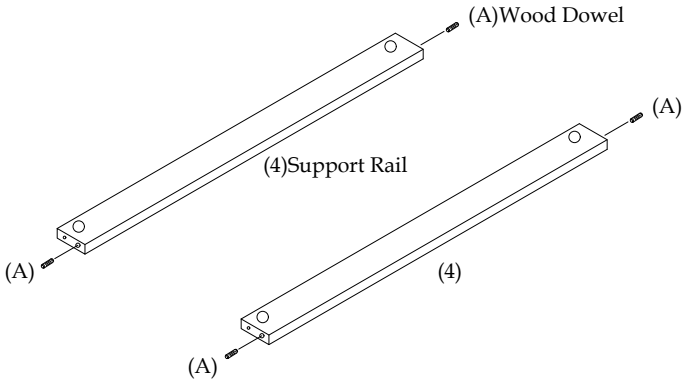

STEP 6

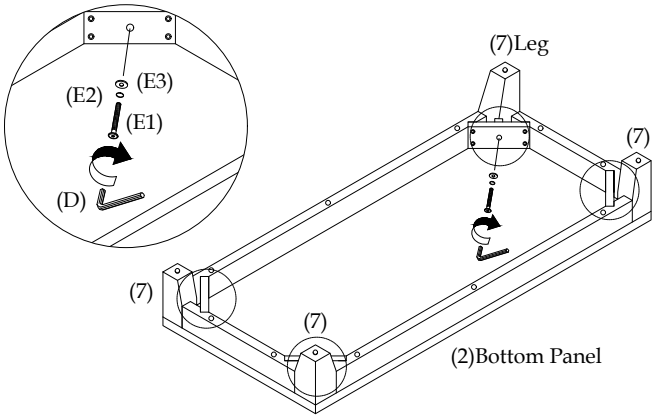

STEP 7

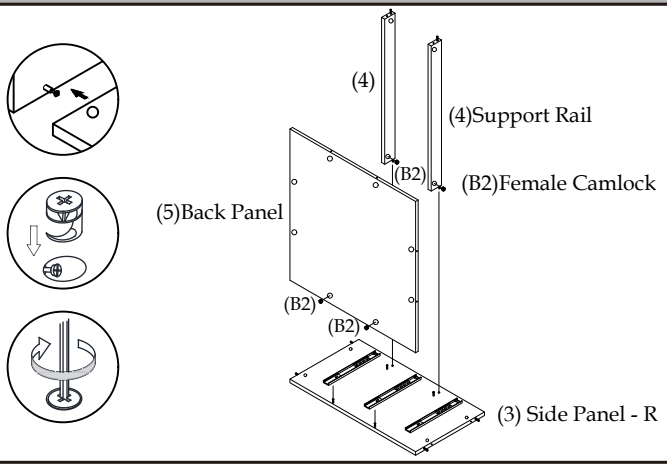

STEP 8

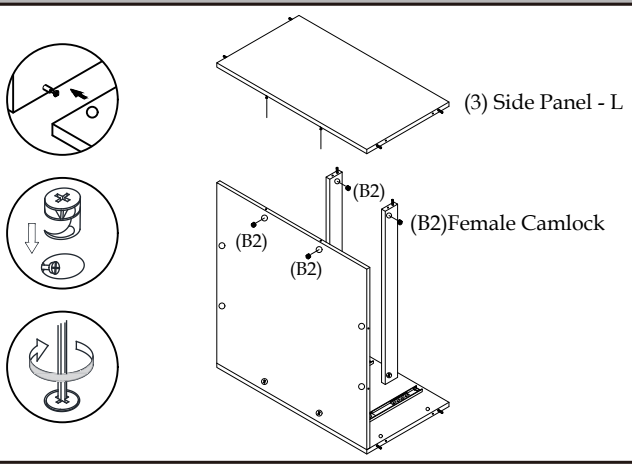

STEP 9

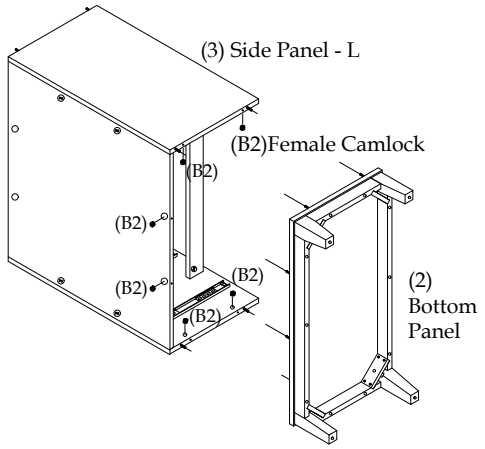

STEP 10

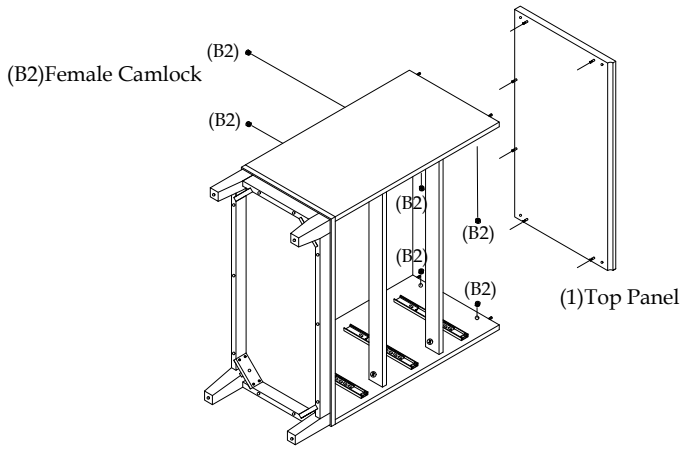

STEP 11

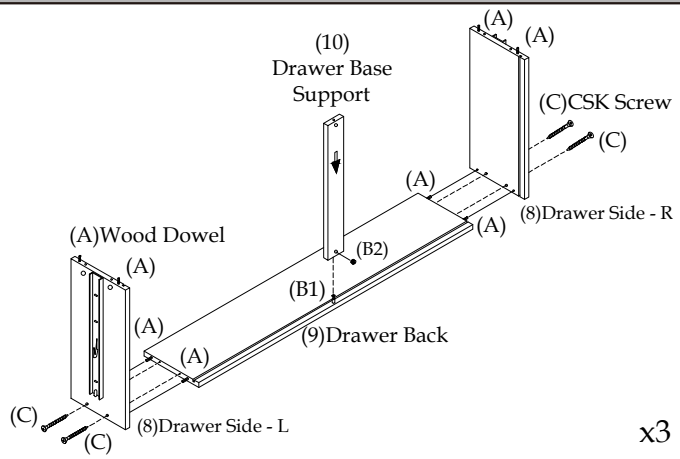

STEP 12

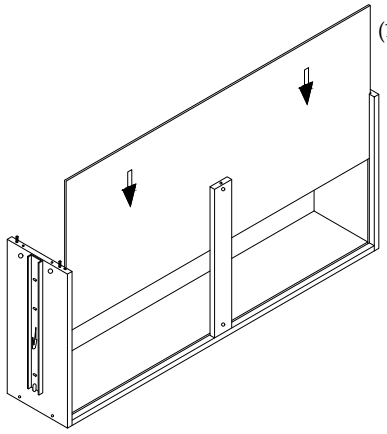

STEP 13

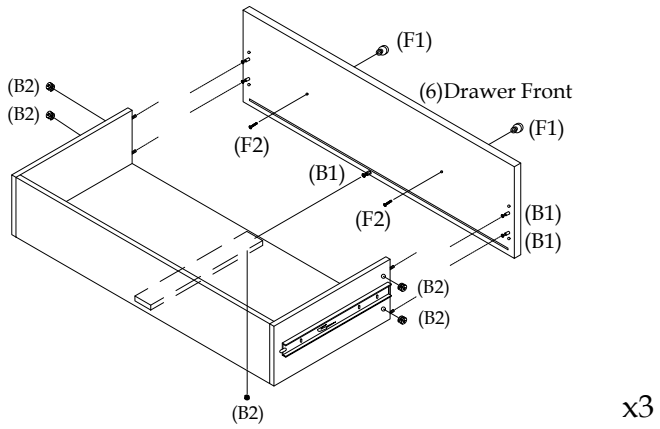

STEP 14

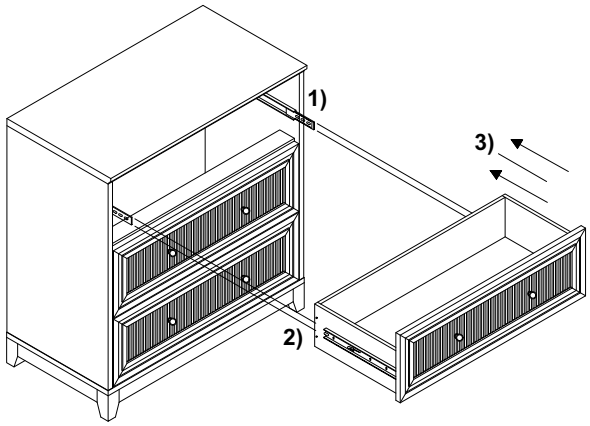

Insert Drawers into Cabinet

1) Bring the ball bearing retainer on cabinet forward.

2) With help from another person, carefully align and insert drawer slide into cabinet slide, guiding the drawer slide between the ball bearing retainer, as shown

3) Push the drawer into cabinet. You may experience a light resistance when pushing the drawer into cabinet, but once both slides are properly engaged, drawer should slide in and out smoothly.

Push forward to closed position and then back out again.

Note.

*Do not use excessive force to insert drawer as this may cause damage to the slides.

*Make sure the drawer with warning label is placed in top drawer position.

To Remove Drawer, If Needed

- **Pull the drawer fully open so levers are visible.**
- **Push UP on left side and DOWN on right side lever.**
- **Holding levers in place, pull drawer toward you.**

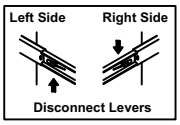

COMPLETED

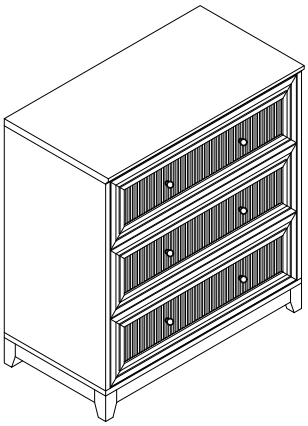

Important:

This furniture includes an anti-tipping kit to help prevent tip-over accidents.

Use is recommended for safety, especially if children are present.

Use the anti-tipping kit as seen in the diagram below. Choose a suitable wall fixing that matches your wall style and then fasten the strap to the wall as shown using appropriate fixings.

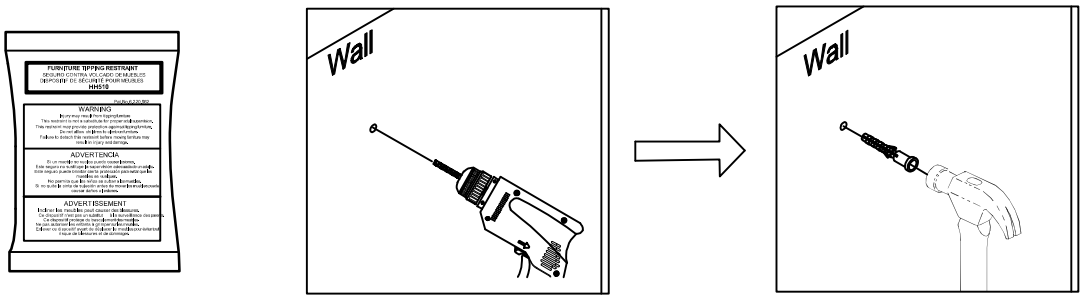

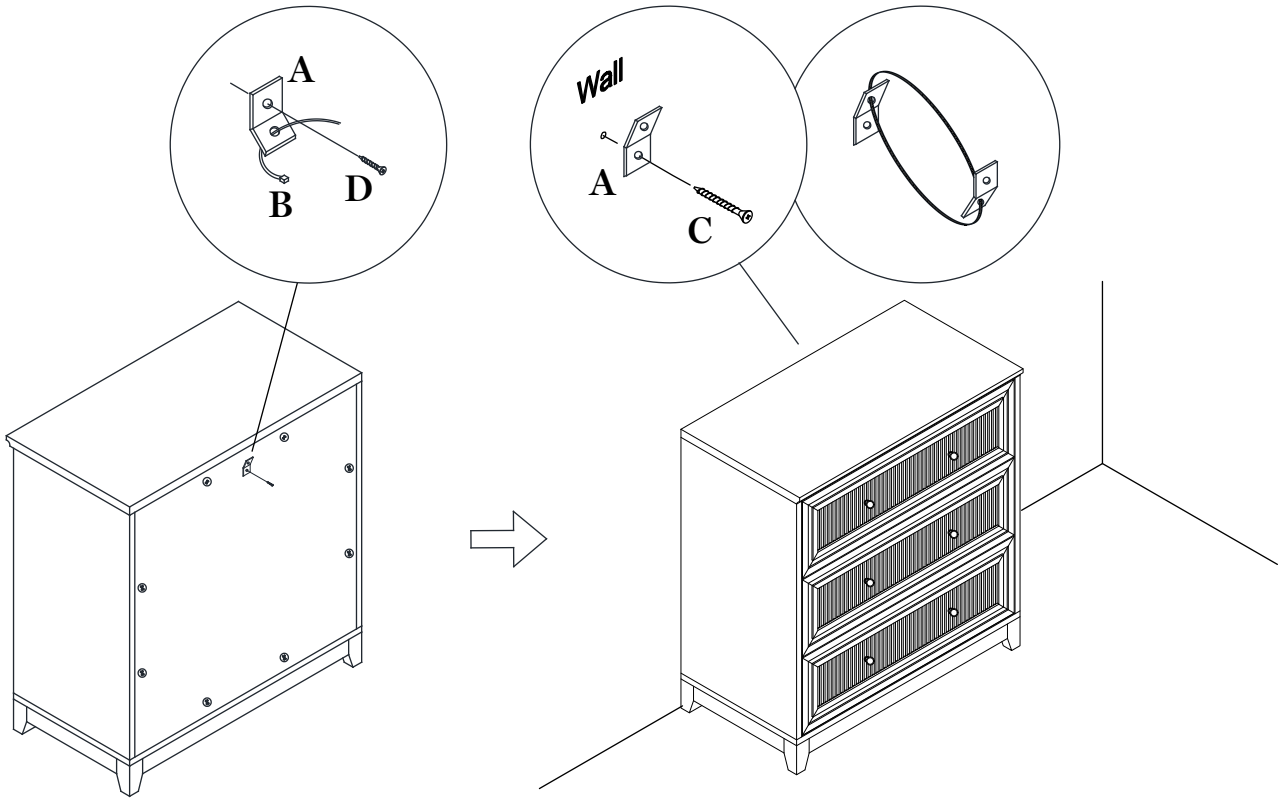

Quality and Safety Guidelines

• Please follow the static and dynamic weight capacity limits provided on this item. If you are unsure of the weight capacities for this product, email us at customerexperience@theubiquegroup.com or call 866-552-2810.

• Please use this item on a stable, level surface only. All parts of the base should contact the flooring surface when in use.

• Do not use this item if any instability is detected.

• This item is intended as a cabinet only, do not climb, stand or sit on this item.

• Do not use this item as a TV stand.

• To prevent pinching or crushing injuries, please ensure fingers are away from the drawer slides and interior spaces when shutting the drawers.

• Do not push or pull this item to move it, team lift to reposition.

• The item is intended to be used indoors.

• For maintenance instructions and replacement parts, please email us at customerexperience@theubiquegroup.com or call 866-552-2810.

• Please review and retain all assembly instructions, safety and quality guidelines and product warnings for future reference.

• For product longevity, product safety and product integrity, protect from wet or humid weather and store indoors in a dry location. For additional storage instructions, please email us at customerexperience@theubiquegroup.com or call 866-552-2810.

• Please visit www.theubiquegroup.com for our product warranty details or email us at customerexperience@theubiquegroup.com or call 866-552-2810.

• Please inspect this product regularly to make sure there are no damaged or worn parts. Also inspect to make sure all hardware is tightened correctly and securely. For inspection instructions, please email us at customerexperience@theubiquegroup.com or call 866-552-2810.

• If any parts are damaged or worn, please stop using the product. Repair this product with manufacturer supplied parts only.