

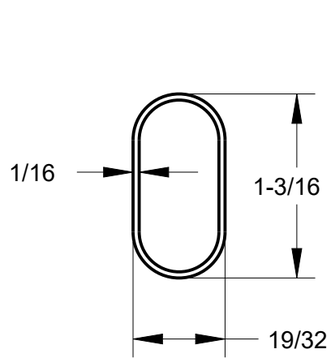

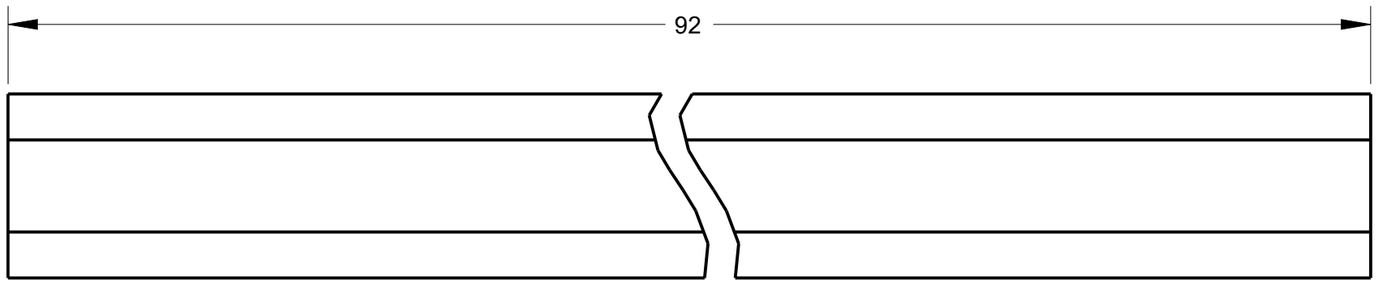

HR ITEM NUMBER	PRODUCT DESCRIPTION	FINISH
153092CH-10	CLOSET ROD, OVAL, 19/32in X 1-3/16in X 92in	CHROME
153092SN-10	CLOSET ROD, OVAL, 19/32in X 1-3/16in X 92in	SATIN NICKEL
153092MB-10	CLOSET ROD, OVAL, 19/32in X 1-3/16in x 92in	MATTE BLACK
153092GLD-10	CLOSET ROD, OVAL, 19/32in X 1-3/16in X 92in	GOLD

Hardware Resources™

HARDWARE RESOURCES RESERVES THE RIGHT TO CHANGE SPECIFICATIONS WITHOUT NOTICE. IN CASE OF A DISCREPENCY, ACTUAL PART GEOMETRY SUPERSEDES THIS DOCUMENT.

THE INFORMATION CONTAINED WITHIN THIS DRAWING IS THE SOLE PROPERTY OF HARDWARE RESOURCES INC. ANY REPRODUCTION IN PART OR WHOLE WITHOUT WRITTEN PERMISSION OF HARDWARE RESOURCES INC. IS PROHIBITED.

DOCUMENT STATUS **Released**

UNLESS OTHERWISE SPECIFIED DIMENSIONS ARE IN INCHES (IN)

MATERIAL	FINISH
STEEL	SEE TABLE

THIRD ANGLE PROJECTION

DATE 11MAR2024

DESCRIPTION: CLOSET ROD, OVAL, 92in

DRAWING NUMBER	REV
153092	**B**

SIZE	SCALE	SHEET
A3	1.000	1 / 1