CONTINENTAL

Owner's Manual

Original Instructions

Air Handlers

Models:

WPFX24A-C

WPFX36A-C

WPFX48A-C

WPFX60A-C

Thank you for choosing this product.
Please read this Owner's Manual carefully before operation and retain it for future reference.

To Users

Thank you for selecting our product. Please read this instruction manual carefully before installing and using the product, so as to master and correctly use the product. In order to guide you to correctly install and use our product and achieve expected operating effect, we hereby instruct as below:

(1) This appliance is not intended for use by persons (including children) with reduced physical, sensory or mental capabilities, or lack of experience and knowledge, unless they have been given supervision or instruction concerning use of the appliance by a person responsible for their safety. Children should be supervised to ensure that they do not play with the appliance.

(2) In order to ensure reliability of product, the product may consume some power under stand-by status for maintaining normal communication of system and preheating refrigerant and lubricant. If the product is not to be used for long, cut off the power supply; please energize and preheat the unit in advance before reusing it.

(3) Please properly select the model according to actual using environment, otherwise it may impact the using convenience.

(4) This product can't be installed at corrosive, inflammable or explosive environment or the place with special requirements, such as kitchen. Otherwise, it will affect the normal operation or shorten the service life of the unit, or even cause fire hazard or serious injury. As for above special places, please adopt special air conditioner with anti-corrosive or anti-explosion function.

(5) If the product needs to be installed, moved or maintained, please contact our designated dealer or local service center for professional support. Users should not disassemble or maintain the unit by themselves, otherwise it may cause relative damage, and our company will bear no responsibilities.

(6) All the illustrations and information in the instruction manual are only for reference. In order to make the product better, we will continuously conduct improvement and innovation. If there is adjustment in the product, please subject to actual product.

Exception Clauses

Manufacturer will bear no responsibilities when personal injury or property loss is caused by the following reasons:

(1) Damage the product due to improper use or misuse of the product.

(2) Alter, change, maintain or use the product with other equipment without abiding by the instruction manual of manufacturer.

(3) After verification, the defect of product is directly caused by corrosive gas.

(4) After verification, defects are due to improper operation during transportation of product.

(5) Operate, repair, maintain the unit without abiding by instruction manual or related regulations.

(6) After verification, the problem or dispute is caused by the quality specification or performance of parts and components that produced by other manufacturers.

(7) The damage is caused by natural calamities, bad using environment or force majeure.

Contents

1 Safety Precautions 1

2 Product Introduction 7

2.1 Product Description.....7

2.2 Operating Range.....7

2.3 Physical Dimension.....8

2.4 Names of Main Parts.....8

2.5 General Information 11

2.6 Refrigerant charge 11

2.7 Dip Switch Configuration.....12

2.8 Fan Performance Data.....13

3 Preparative for Installation..... 15

3.1 Pre-Installation Instruction.....15

3.2 Important Safety Instructions.....16

4 Installation..... 18

4.1 Unit Inspection 18

4.2 Location 18

4.3 Piping Work.....21

4.4 Condensate Removal.....23

4.5 Ductwork.....24

4.6 Electric Heater 24

4.7 Electrical Installation 27

5 Installation Check and Trial Run 36

5.1 Checking Items after Installation 36

5.2 Trial Run 37

6 Common Malfunction and Elimination 37

7 Maintenance and Care..... 41

7.1 Drain Pipe 41
7.2 Notice before Seasonal Use.....41
7.3 Maintenance after Seasonal Use 41
7.4 Parts Replacement.....41
7.5 Unventilated Areas 42
8 After-Sales Service 42
9 Qualification of Worker 43
10 Transportation, Marking and Storage for Units that Employ Flammable Refrigerants 43
10.1 General 43
10.2 Transport of Equipment Containing Flammable Refrigerants 43
10.3 Marking of Equipment Using Signs 43
10.4 Disposal of Equipment Using Flammable Refrigerants.....44
10.5 Storage of Equipment/Appliances 44
10.6 Storage of Packed (Unsold) Equipment 44
11 Information on Servicing..... 44
11.1 General 44
11.2 Checks to the Area 44
11.3 Work Procedure 44
11.4 General Work Area 45
11.5 Checking for Presence of Refrigerant.....45
11.6 Presence of Fire Extinguisher.....45
11.7 No Ignition Sources 45
11.8 Ventilated Area 45
11.9 Checks to the Refrigerating Equipment 46
11.10 Checks to Electrical Devices 46
11.11 Pipe Installation 47

12 Sealed Electrical Components shall be Replaced 47
13 Intrinsically Safe Components must be Replaced..... 47
14 Cabling 48
15 Detection of Flammable Refrigerants 48
16 Removal and Evacuation 49
17 Charging Procedures 50
18 Decommissioning..... 50
19 Labelling..... 51
20 Recovery..... 51

1 Safety Precautions

⚠WARNING

This product can't be installed at corrosive, inflammable or explosive environment or the place with special requirements, such as kitchen. Otherwise, it will affect the normal operation or shorten the service life of the unit, or even cause fire hazard or serious injury. As for above special places, please adopt special air conditioner with anti-corrosive or anti-explosion function.

Improper installation, adjustment, alteration, service, maintenance, abolish or use can cause explosion, fire, electrical shock, or other conditions which may cause death, personal injury, or property damage. Consult a qualified installer, service agency, or your distributor or branch for information or assistance. The qualified installer or agency must use factory--authorized kits or accessories when modifying this product. Refer to the individual instructions packaged with the kits or accessories when installing. Follow all safety codes. Wear safety glasses, protective clothing, and work gloves. Use quenching cloth for brazing operations. Have fire extinguisher available. Read these instructions thoroughly and follow all warnings or cautions included in literature and attached to the unit. Consult local building codes and National Electrical Code (NEC) for special requirements. Recognize safety information. In Canada, refer to the current editions of the Canadian Electrical Code CSA C22.1. This is the safety--alert symbol ⚠.

When you see this symbol on the unit and in instructions or manuals, be alert to the potential for personal injury. Understand these signal words: **DANGER**, **WARNING**, **CAUTION** and **NOTICE**. These words are used with the safety--alert symbol.

⚠ **DANGER**	Indicates a hazardous situation that, if not avoided, will result in death or serious injury.
⚠ **WARNING**	Indicates a hazardous situation that, if not avoided, could result in death or serious injury.
⚠ **CAUTION**	Indicates a hazardous situation that, if not avoided, may result in minor or moderate injury.
NOTICE	Indicates important but not hazard-related information, used to indicate risk of property damage.

Appliance filled with flammable magas R454B.

Before install the appliance, read the installation manual first.

Before use the appliance, read the owner's manual first.

Before repair the appliance, read the service manual first.

⚠ WARNING

Do not use means to accelerate the defrosting process or to clean，other than those recommended by the manufacturer.

The appliance shall be stored in the room without continuously operating ignition sources(for example: open flames, an operating gas appliance or an operating electric heater.)

Do not pierce burn.

Be aware that refrigerant may not contain an odor.

⚠ WARNING

Electric heating or the product need to be 5 feet away from other combustible materials or 1 foot away from the wall.

⚠ WARNING

Electrical shock hazard:

Failure to follow this warning could result in personal injury or death.

Before installing, modifying, or servicing system, main electrical disconnect switch must be in the OFF position. There may be more than 1 disconnect switch. Lock out and tag switch with a suitable warning label.

⚠ WARNING	
(1)	The air conditioner should be grounded to avoid electric shock. Do not connect the ground wire to gas pipe, water pipe, lightning arrester or telephone wire.
(2)	The appliance shall be stored in a well-ventilated area where the room size corresponds to the room area as specified for operation.
(3)	The appliance shall be stored in a room without continuously operating open flames (for example an operating gas appliance) and ignition sources (for example an operating electric heater).

⚠ WARNING
(4) According to federal/state/local laws and regulations, all packages and transportation materials, including nails, metal or wooden parts, and plastic packing material, must be treated in a safe way.
(5) Handle equipment with care during transportation. Team handling is required; use appropriate handling equipment. Never grasp the packaging straps; wear safety gloves during unpacking and handling to prevent injury. Do not lift by the bottom edge to avoid pinch point injuries to hands and fingers.

⚠ WARNING
(1) Please install according to this instruction manual. Installation must be performed in accordance with the requirement of NEC and CEC by authorized personnel only.
(2) Any person who is involved with working on or breaking into a refrigerant circuit should hold a current valid certificate from an industry-accredited assessment authority, which authorises their competence to handle refrigerants safely in accordance with an industry recognised assessment specification.
(3) Servicing shall only be performed as recommended by the equipment manufacturer.
(4) The appliance shall be installed in accordance with national wiring regulations.
(5) The fixed wires connecting to the appliance must be configured with all-pole disconnection device under voltage grade III according to wiring rules.
(6) Air conditioner should be stored with protective measures against mechanical damage caused by accident.
(7) If the installation space for air conditioner pipe is too small, adopt a protective measure to prevent the pipe from physical damage.
(8) During installation, use the specialized accessories and components, otherwise water leakage, electric shock or fire hazard may occur.
(9) Please install the air conditioner in a secure place that can withstand the weight of air conditioner. Insecure installation may cause the air conditioner falling down and lead to injury.
(10) Be sure to adopt independent power circuit. If the power cord is damaged, it must be repaired by the manufacturer, service agent or other professional agents.
(11) The air conditioner can be cleaned only after it is turned off and power-disconnected, otherwise electric shock may occur.
(12) The air conditioner is not intended to be cleaned or maintained by children without supervision.
(13) Do not alter the setting of pressure sensor or other protective devices. If the protective devices are short-circuited or changed against rules, fire hazard or even explosion may occur.

⚠ WARNING
(14) Do not operate the air conditioner with wet hands. Do not wash or sprinkle water on the air conditioner, otherwise malfunction or electric shock will occur.
(15) Do not dry the filter with naked flame or an air blower; otherwise the filter will be out of shape.
(16) If the unit is to be installed in a small space, please adopt protective measures to prevent the concentration of refrigerant from exceeding the allowable safety limit; excessive refrigerant leakage may lead to explosion.
(17) When installing or re-installing the air conditioner, please keep the refrigerant circuit away from substances other than the specified refrigerant, such as air. Any presence of foreign substances will cause abnormal pressure change or even explosion, resulting in injury.
(18) All external cables of the equipment shall be protected by insulated conduits with supplementary insulation. The electrical strength between power and signal cables shall be ≥2750 V.
(19) To prevent electrocution, do not touch electrical components immediately after power disconnection. Always wait a minimum of 10 minutes before handling electrical components.
(20) HVAC system failure in cold weather may cause frozen pipes to burst.
(21) When installing or moving the unit, do not charge refrigerant that does not match the nameplate identification. Mixing other refrigerants or air may cause refrigeration cycle failures, failure of unit protection, and serious damage. Leak detection additives must not be used, as mixing with refrigerant may cause damage to the unit. Refrigerant must comply with local regulations.
(22) Brazing must not be performed within the unit assembly.
(23) In the event of refrigerant leakage, immediately ventilate the affected room.
(24) If the nameplate and warning labels are visible in the installed state, the installer shall ensure that these labels are not covered after installation.

NOTICE
(1) Do not put a finger or other objects into the air inlet or return air grill.
(2) Please adopt safety protection measures before touching the refrigerant pipe; otherwise your hands may be hurt.
(3) Please arrange the drain pipe according to the instruction manual.
(4) Never stop the air conditioner by directly cutting off the power.
(5) Please select the proper copper pipe according to the requirement for pipe thickness.

NOTICE
(6) Never install the air conditioner in the following places: a) Places with oil smoke or volatile liquid: plastic parts may deteriorate and fall off or even cause water leakage. b) Places with corrosive gas: copper pipe or the welding parts may be corroded and cause refrigerant leakage.
(7) Adopt proper measures to protect the outdoor unit from small animals because they may damage the electric components and cause malfunction of the air conditioner.

NOTICE
(1) If thermostat is to be used, it should be connected first before powering up the unit, otherwise the thermostat may not be able to use.
(2) Only use soft dry cloth or slightly wet cloth with neutral detergent to clean the casing of the air conditioner. Combustible cleaning agents must not be used for air conditioner cleaning. Use of combustible cleaning agents may cause fire or component distortion.
(3) Before operating the unit under low temperature, connect it to power for 8 hours. If it is stopped for a short time, for example, one night, do not cut off the power (This is to protect the compressor).
(4) In order to ensure the reliability of the compressor, the unit force the compressor run for at least 6 minutes every time the compressor turns on, regardless of the room temperature. Therefore, it is necessary to select a thermostat having the minimum run time for the compressor or delaying a few minutes to turn the indoor unit off after the outdoor unit is shut down or stopped at the temperature point, in order to avoid that the indoor unit is turned off by the thermostat while the out unit is running which can result in the malfunction of the air conditioner.
(5) In order to avoid the abnormality of the unit caused by the high temperature of the pipe, it is forbidden to use gas auxiliary when the outdoor unit is turned on.
(6) Because the cut-off valve is connected by welding after sale, there is a hidden danger of O-ring in the cut-off valve that will affect the sealing leakage. Therefore, when welding the connecting pipe, the valve body of the cut-off valve should be wrapped with wet cloth for protection.
(7) This product cannot be used in combination with other products, otherwise it may cause performance, reliability and safety problems.
(8) HVAC systems may be affected by electromagnetic interference from medical equipment or broadcast signals, and conversely, inverter equipment, private generators, high-frequency medical devices, or radio communication equipment may also interfere with HVAC systems operation.

⚠ WARNING

PROPOSITION 65:

Respirable particles of fiberglass are known to State of California to cause cancer. This appliance contains fiberglass insulation.

California Proposition 65 warnings are required for certain products, which are not covered by the OSHA standards. All manufacturer products meet current federal OSHA Guidelines for safety.

Products that contain or produce any of the more than 600 listed chemicals known in California can cause cancer or birth defects, such as fiberglass insulation, lead in brass and natural gas combustion products. Warnings are issued for such products sold in California as required by California Proposition 65.

All “new equipment” shipped for sale in California will have labels stating that the product contains and /or produces Proposition 65 chemicals. We cannot always know “ when, or if ” products will be sold in the California market. Although we have not changed our processes, having the same label on all our products facilitates manufacturing and shipping.

⚠ WARNING

All phases of this installation must conform to NATIONAL, STATE AND LOCAL CODES. If it is required for additional information, please contact your local distributor.

⚠ WARNING

The unit must be permanently grounded. Failure to do so can lead to electrical shock causing personal injury or death.

⚠ WARNING

Refrigerant is denser than air and accumulates in low-lying areas (e.g. basements, interstitial spaces), creating hazardous zones. Excessive refrigerant leakage may cause oxygen deficiency in enclosed spaces, posing a life-threatening hazard.

⚠ WARNING

Use of incorrect refrigerant may cause equipment damage and present safety hazards to personnel.

⚠ WARNING

Do not touch heat exchanger fins to avoid finger cuts.

⚠ WARNING

The material of plenum and ductwork must meet the standard NFPA 90B.

The supply air plenum or duct must have a solid sheet metal bottom piece directly after the air handler unit with no openings, registers or flexible air ducts located in it. The first 6 inches of supply air plenum and ductwork must be constructed of sheet metal as required by NFPA 90B. Metal plenum of duct may be connected to the non-combustible floor base for downflow. Exposing combustible non-metal. material to the supply opening of a downflow unit can cause a fire resulting in property damage, personal injury or death. If flexible supply air ducts are used they may be located only in the side walls of the rectangular plenum, a minimum of 6 inches from the solid bottom.

2 Product Introduction

2.1 Product Description

The Continental air handler offer the perfect combination of superior product quality, operating efficiency, operating sound levels and value for money. The unit uses the environmentally friendly refrigerant R454B, which is chlorine-free to help prevent damage to the ozone layer. This product cannot be used in combination with other products, otherwise it may cause performance, reliability and safety problems.

2.2 Operating Range

—	Cooling	Heating
Indoor temperature	64.4°F(18°C)~89.6°F(32°C)	50°F(10°C)~80.6°F (27°C)

2.3 Physical Dimension

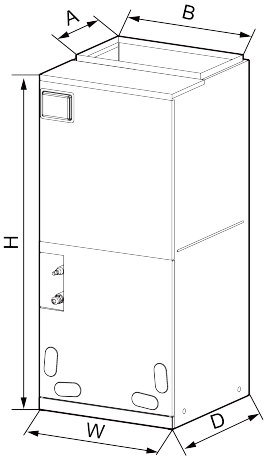

Unit: inch(mm)

Model	Dimension				
	W	D	H	A	B
WPFX24A-C	18-1/8 (460)	21-1/4 (540)	43-1/2 (1105)	11-5/8 (295)	16-3/4 (426)
WPFX36A-C	21-1/4 (540)	21-1/4 (540)	48-3/16 (1224)	11-5/8 (295)	20 (508)
WPFX48A-C	24-13/16 (630)	21-1/4 (540)	52 (1320)	11-5/8 (295)	20 (508)
WPFX60A-C					

NOTE: The outdoor unit models that can be matched with the indoor unit can be found on the AHRI website.

2.4 Names of Main Parts

2.4.1 Vertical installation

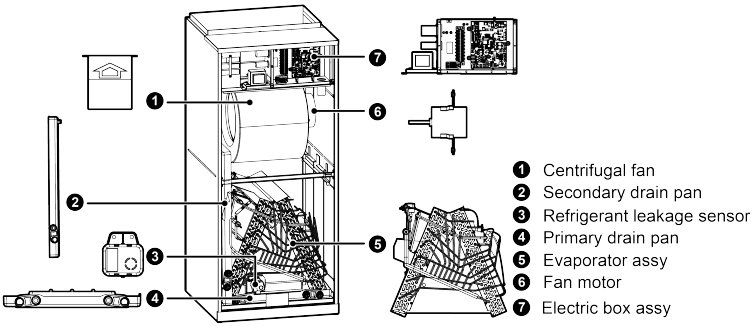

2.4.2 Horizontal installation

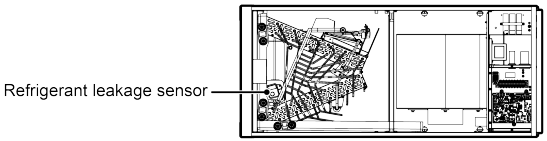

NOTES: When installing as shown in the figure, the refrigerant sensor needs to be installed in the position shown in the figure, remove the fixing screws of the refrigerant sensor and adjust the internal wiring to ensure that the internal wiring does not touch the sharp side, the wiring cannot exceed the drip pan and the wiring must not come into contact with water.

2.4.3 Downflow installation

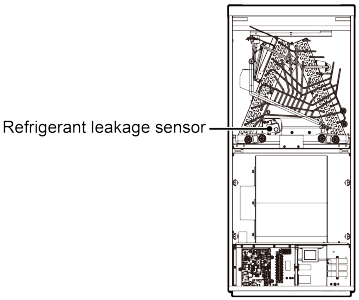

NOTE: When installing as shown in the figure, adjust the internal wiring to ensure that the inner wiring will not meet the sharp side.

The inverted device also needs to adjust the position of the return air temperature package, as shown below. Firstly, loosen the screw and remove the component. Then, remove the temperature sensor and install it in the new position. Finally, use aluminum foil or steel plate (accessories) for sealing.

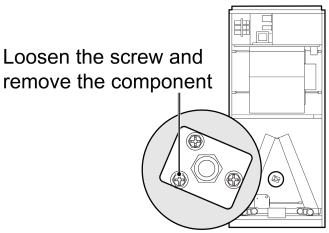

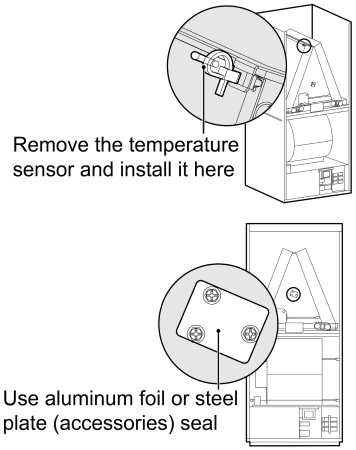

NOTES: If the refrigerant sensor is damaged, replace the refrigerant sensor as follows:

①. Remove the lower front side panel.

②. Remove the fixing screws of the refrigerant sensor.

③. Replace the refrigerant sensor with a new one.

The service life of the refrigerant sensor is fifteen years and the refrigerant sensor of the refrigerant detection system can only be replaced with the particular sensor which is specified by the manufacturer.

④. Where a single remote refrigerant sensor is used in a room with multiple units, all units in the room which do not have a dedicated refrigerant detection system shall take the same actions. When an ITE COOLING APPLIANCE or PARTIAL UNIT'S REFRIGERANT DETECTION SYSTEMS for an appliances refrigerant circuit resets to a safe condition the unit shall not be allowed to initiate NORMAL OPERATIONS until all REFRIGERANT DETECTION SYSTEM systems in the CIRCULATION AIRFLOW have been reset.

Where a single REMOTE REFRIGERANT DETECTION system sensor is used in a room with multiple units, this requirement shall apply to all units in the room which do not have a dedicated REFRIGERANT DETECTIONSYSTEM.

2.5 General Information

Unit: mm

Model	Filter Size
WPFX24A-C	420×516×15
WPFX36A-C	490×516×15
WPFX48A-C	585×516×15
WPFX60A-C	585×516×15

NOTE: When removing the air filter, wear appropriate eye protection. Include gas handling procedures to prevent exposure to toxic and hazardous gases.

2.6 Refrigerant charge

No.	Refrigerant Perfusion(kg)	Minimum Room Area(m²)	Minimum Room Area(ft²)
1	3.0	9.2	99.0
2	3.2	9.8	105.5
3	3.7	11.4	122.7
4	3.9	12.0	129.2
5	4.6	14.1	151.8
6	5.1	15.7	169.0
7	6.0	18.5	199.1

NOTES:

①. Based upon W/nominal tonnage, dry coil and filter should be installed.

②. Use 0.96 as approximate SCFM correction factor for wet coil.

③. The room area is calculated according to the height of 2.2m. Minimum room height is 2.2m.

④. This manual is only applicable to a single room.

⑤. Correct the minimum room area of the space Amin by multiplying by an altitude adjustment factor (AF) based on for building site ground level altitude (Halt) in meters.

Halt	0	200	400	600	800	1000	1200	1400	1600
AF	1.00	1.00	1.00	1.00	1.02	1.05	1.07	1.10	1.12
Halt	1600	1800	2000	2200	2400	2600	2800	3000	3200
AF	1.12	1.15	1.18	1.21	1.25	1.28	1.32	1.36	1.40

⑥. The minimum airflow corresponding to different products is as follows:

WPFX24A-C：467m³/h

WPFX36A-C：517m³/h

WPFX48A-C, WPFX60A-C: 609m³/h

"LEAK DETECTION SYSTEM installed. Unit must be powered except for service." If any remote located REFRIGERANT SENSOR is employed to detect leaked refrigerant, such a remote located REFRIGERANT SENSOR shall also apply to this marking or be accompanied by such instructions.

2.7 Dip Switch Configuration

2.7.1 Set Indoor Fan Speed

Set the indoor unit fan speed through the 4 DIP switches on the indoor unit's main control board labeled Heat (SA2). The higher level, the higher speed of the indoor unit fan. Operation Instruction is below:

Dip switch settings must be completed before power on the unit.

After the unit is shut down or stopped at the temperature point, the indoor unit will delay for a few minutes and then shut down. The refrigeration can realize the drying function, relieve the mold of the air duct, and the heating can blow the waste heat and relieve the heat accumulation in the air duct.

During installation and debugging, pay attention to check whether the thermostat has set the fan delay and shutdown time. If the thermostat has been set, the actual delay and shutdown time of the fan is equal to the thermostat setting time plus the fan delay time of the indoor unit.

Model	Level	Heat (SA2)				Cool (SA1)			
WPFX24A-C	Level 1	0	0	0	1	1	1	1	1
	Level 2	0	0	1	0	1	1	1	1
	Level 3-Default	0	0	1	1	1	1	1	1
	Level 4	0	1	1	0	1	1	1	1
	Level 5	0	1	1	1	1	1	1	1
WPFX36A-C	Level 1	0	0	0	1	1	1	1	1
	Level 2	0	0	1	0	1	1	1	1
	Level 3-Default	0	0	1	1	1	1	1	1
	Level 4	0	1	1	0	1	1	1	1
	Level 5	0	1	1	1	1	1	1	1
WPFX48A-C	Level 1	0	0	0	1	1	1	1	1
	Level 2	0	0	1	0	1	1	1	1
	Level 3-Default	0	0	1	1	1	1	1	1
	Level 4	0	1	1	0	1	1	1	1
	Level 5	0	1	1	1	1	1	1	1

Model	Level	Heat (SA2)				Cool (SA1)			
WPFX60A-C	Level 1	0	0	0	1	1	1	1	1
	Level 2	0	0	1	0	1	1	1	1
	Level 3-Default	0	0	1	1	1	1	1	1
	Level 4	0	1	1	0	1	1	1	1
	Level 5	0	1	1	1	1	1	1	1

NOTE: 0 means dip switch to ‘on’, 1 means dip switch to number.

2.7.2 DH/Y2 Terminal Function Selection

The third dip switch on the indoor unit’s main control board labeled Cool (SA1) is selecting the DH/Y2 terminal function. This dip switch is used to select between DH or Y2, factory default setting is DH.

Terminal Function	Cool (SA1)			
DH (Default)	1	1	1	1
Y2	1	1	0	1

NOTE:

0 means dip switch to ‘on’, 1 means dip switch to number.

DH means dehumidify signal. When the indoor unit receives a dehumidify signal, the indoor unit enters the dehumidify mode.

When the Y2 dip switch setting is valid, the indoor fan can automatically change the wind gear according to the room load variation.

2.8 Fan Performance Data

External static pressure should stay within the minimum and maximum limits shown in the table below in order to ensure proper operation of both cooling and heating operation.

Model	WPFX24A-C											
Level	Static pressure: inwg (Pa)											
	0 (0)	0.1 (25)	0.15 (37)	0.2 (50)	0.3 (75)	0.4 (100)	0.5 (125)	0.6 (150)	0.7 (175)	0.8 (200)	0.9 (225)	1 (250)
Speed 1(CFM)	1080	960	900	830	—	—	—	—	—	—	—	—
Speed 2(CFM)	1220	1120	1060	990	820	—	—	—	—	—	—	—
Speed 3(CFM)	1380	1250	1120	1070	1020	920	760	—	—	—	—	—
Speed 4(CFM)	1700	1630	1580	1530	1450	1400	1370	1270	1150	970	790	—

Model	WPFX24A-C											
Level	Static pressure: inwg (Pa)											
	0 (0)	0.1 (25)	0.15 (37)	0.2 (50)	0.3 (75)	0.4 (100)	0.5 (125)	0.6 (150)	0.7 (175)	0.8 (200)	0.9 (225)	1 (250)
Speed 5(CFM)	1750	1700	1650	1600	1590	1500	1420	1330	1200	1050	950	850

Model	WPFX36A-C											
Level	Static pressure: inwg (Pa)											
	0 (0)	0.1 (25)	0.15 (37)	0.2 (50)	0.3 (75)	0.4 (100)	0.5 (125)	0.6 (150)	0.7 (175)	0.8 (200)	0.9 (225)	1 (250)
Speed 1(CFM)	1220	1120	1020	960	—	—	—	—	—	—	—	—
Speed 2(CFM)	1380	1260	1200	1100	950	—	—	—	—	—	—	—
Speed 3(CFM)	1630	1580	1500	1430	1370	1200	1000	970	—	—	—	—
Speed 4(CFM)	1840	1800	1750	1710	1640	1590	1500	1420	1330	1220	1100	930
Speed 5(CFM)	1870	1830	1810	1800	1760	1690	1620	1520	1440	1350	1250	1150

Model	WPFX48A-C											
Level	Static pressure: inwg (Pa)											
	0 (0)	0.1 (25)	0.15 (37)	0.2 (50)	0.3 (75)	0.4 (100)	0.5 (125)	0.6 (150)	0.7 (175)	0.8 (200)	0.9 (225)	1 (250)
Speed 1(CFM)	1680	1560	1500	1350	—	—	—	—	—	—	—	—
Speed 2(CFM)	1810	1690	1620	1550	1380	—	—	—	—	—	—	—
Speed 3(CFM)	1930	1830	1770	1710	1580	1480	1200	—	—	—	—	—
Speed 4(CFM)	2280	2240	2200	2180	2130	2080	2000	1880	1750	1600	1400	1200
Speed 5(CFM)	2300	2260	2220	2190	2140	2090	2040	1980	1930	1800	1700	1550

Model	WPFX60A-C											
Level	Static pressure: inwg (Pa)											
	0 (0)	0.1 (25)	0.15 (37)	0.2 (50)	0.3 (75)	0.4 (100)	0.5 (125)	0.6 (150)	0.7 (175)	0.8 (200)	0.9 (225)	1 (250)
Speed 1CFM)	1850	1720	1650	1600	—	—	—	—	—	—	—	—
Speed 2(CFM)	1920	1800	1730	1650	1480	—	—	—	—	—	—	—

Model	WPFX60A-C											
Level	Static pressure: inwg (Pa)											
	0 (0)	0.1 (25)	0.15 (37)	0.2 (50)	0.3 (75)	0.4 (100)	0.5 (125)	0.6 (150)	0.7 (175)	0.8 (200)	0.9 (225)	1 (250)
Speed 3(CFM)	2110	2000	1950	1860	1760	1640	1500	—	—	—	—	—
Speed 4(CFM)	2300	2260	2230	2200	2150	2115	2050	1990	1920	1790	1650	1470
Speed 5(CFM)	2320	2280	2250	2230	2190	2140	2080	2040	2000	1950	1920	1890

NOTE: Please refer to above table for fan speed selection, and "—" indicates that the electric heater is not allowed to be used. Underline "__" indicates that electric heating is not allowed.

3 Preparative for Installation

3.1 Pre-Installation Instruction

3.1.1 Checking Product Received

After receiving the product, please check if there is any damage caused by transportation. Shipping damage is the responsibility of the carrier. Verify the model number, specifications and accessories are correct prior to installation. The distributor or manufacturer will not accept claims from dealers for transportation damage or installation of incorrectly shipped units.

3.1.2 Before Installation

Carefully read all instructions for the installation prior to installing product. Make sure each step or procedure is understood and any special considerations are taken into account before starting installation. Assemble all tools, hardware and supplies needed to complete the installation. Some items may need to be purchased locally. Make sure everything needed to install the product is on hand before starting.

3.1.3 Codes & Regulations

This product is designed and manufactured to comply with national codes. It is installer's responsibilities to install the product in accordance with such codes and/or any prevailing local codes/regulations. The manufacturer assumes no responsibilities for equipment installed in violation of any codes or regulations.

3.1.4 Replacement Parts

When reporting shortages or damages, or ordering repair parts, give the complete product model and serial numbers as stamped on the product. Replacement parts for this product are available through your contractor or local distributor.

3.2 Important Safety Instructions

Recognize safety symbols, words, and labels

The following symbols and labels are used throughout this manual to indicate immediate or potential hazards. It is the owner's responsibility to read and comply with all safety information and instructions accompanying these symbols. Failure to heed safety information increases the risk of serious personal injury or death, property damage and/or product damage.

⚠ DANGER Immediate hazards which will result in property damage, product damage, severe personal injury or death.

⚠ WARNING Hazards or unsafe practices could result in property damage, product damage, severe personal injury or death.

NOTICE Hazards or unsafe practices which may result in property damage, product damage, severe personal injury or death.

⚠ WARNING Before serving or installing this equipment. The electrical power to this unit must be in the "off" position. Caution, more than one disconnect may exist. Failure to observe this warning may result in an electrical shock that can cause personal injury or death.

⚠ WARNING

The United States Environmental Protection Agency ("EPA") has issued various regulations regarding the introduction and disposal of refrigerants introduced into this unit. Failure to follow these regulations may harm the environment and can lead to the imposition of substantial fines. These regulations may vary due to the passage of laws. A certified technician must perform the installation and service of this product. Should questions arise, contact your local EPA office.

⚠WARNING Due to high system pressure and electrical shock in potential, installation and service work can be dangerous. Only trained and qualified persons are permitted to install or service this equipment. Observe all warnings contained in this manual and labels/tags attached to the equipment.

⚠WARNING This product is factory shipped for use with a 208/230V-1Ph-60Hz electrical power supply. This air handler must not be reconfigured to operate with any other power supply.

⚠WARNING The unit must have an uninterrupted, unbroken electric grounding to minimize the possibility of personal injury if an electric fault occurs. The electric grounding circuit may consist of an appropriate sized power cord which connected with the grounding piece located in the unit control box and also connecting to the building electric service panel. Other methods of grounding are permitted if performed in accordance with the “National Electric Code” (NEC)/ “American National Standards Institute” (ANSI)/ “National Fire Protection Association” (NFPA) 70 and local/state codes. In Canada, electric grounding conforms to the Canadian electric code CSA c22.1. Failure to observe this warning can result in electrical shock that can cause personal injury.

CARBON MONOXIDE POISONING HAZARD

Special warning for installation of furnaces or air handling units in enclosed areas, such as garages, utility rooms or parking areas.

Carbon monoxide producing devices (such as an automobile, space heater, gas water heater, etc.) should not be operated in enclosed areas such as unventilated garages, utility rooms or parking areas because of the danger of carbon monoxide (CO) poisoning resulting from the exhaust emissions. If a furnace or air handler is installed in an enclosed area such as a garage, utility room or

parking area and a carbon monoxide producing device is operated therein, there must be adequate ventilation directly to outside.

This ventilation is necessary to avoid the danger of CO poisoning which can occur if a carbon monoxide producing device continues to operate in the enclosed area. Carbon monoxide emission can be (re)circulated throughout the building if the furnace or air handler is operating in any mode.

CO can cause serious illness including permanent brain damage or death.

⚠ WARNING

For appliances using FLAMMABLE REFRIGERANTS with safety features that depend upon the proper function of a leak detection system used for leak mitigation, the instructions and unit markings shall contain the substance of the following: "LEAK DETECTION SYSTEM installed. Unit must be powered except for service." If any remote located REFRIGERANT SENSOR is employed to detect leaked refrigerant, such a remote located REFRIGERANT SENSOR shall also apply to this marking or be accompanied by such instructions.

4 Installation

4.1 Unit Inspection

Upon delivery, inspect the unit for damage. Any damage must be reported immediately to the carrier. Do not install such an equipment damaged by freight which determines the integrity and safety of the unit.

Please check the equipment model number to ensure the unit is appropriately sized for the condensing unit.

Unit is supplied, it must not be installed and it is to be returned to the supplier. The manufacturer assumes no responsibility for the installation of incorrectly delivered units. The evaporator coil contains high-pressure inert gas for holding charge.

4.2 Location

⚠ WARNING
(1) The unit must be installed where strong enough to withstand the weight of the unit and fixed securely, otherwise the unit would topple or fall off.
(2) The mounting bracket shall remain structurally sound throughout its service life. Any degradation must be repaired immediately; failure to do so may cause equipment detachment, resulting in personal injury or property damage.

⚠ WARNING
(3) Do not install where there is the danger of combustible gas leakage.
(4) Do not install the unit at a place with leakage of inflammable gas.
(5) Sealant must be applied at all penetration points where wiring, refrigerant lines, and condensate drain lines enter the cabinet.

⚠ WARNING This air handler is designed for indoor installation only. Do not install it outdoors.

When installing the air handler, take consideration to minimize the length of refrigerant tubing as much as possible. Do not install the air handler in a location either above or below the condenser that violates the instructions provided with the condenser. Service clearance is to take precedence. Allow a minimum of 24" in front of the unit for service clearance. When installing the indoor unit, an external drain pan must be placed under the equipment to prevent condensate from entering the room. See local and state codes for requirements. When installing this unit in an area that may become wet, elevate the unit with a sturdy, non-porous material. In installations that may lead to physical damage (i.e. a garage) it is advised to install a protective barrier to prevent such damage. Incorrect installation of the indoor unit may result in inadequate drainage, potentially causing bacterial growth and associated health hazards. Inadequate drainage may also lead to corrosion of the unit. Vibration isolation, acoustic insulation, and noise control measures must be implemented during installation. In places with high noise requirements, sufficient noise reduction measures should be taken.

This air handler is designed for a complete supply and return ductwork system. Do not operate this product without all ductwork attached. The supply duct must be longer than 5 feet(1.524m).

Based upon the actual conditions, if air handler is installed as Fig. A, the air handler should be concealed in a specific room or space and make sure the air handler is not accessible to the general public. The height between the air handler and ground is above 19 in.

Based upon the actual conditions, if air handler is installed as Fig. B, make sure that there is enough space for care and maintenance and the height between the air handler and ground is above 2500mm. And the air handler is not accessible to the general public.

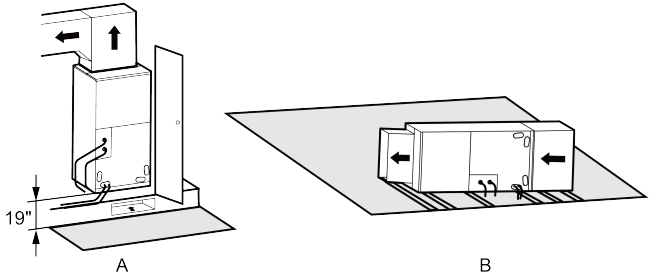

Measures should be reserved for easy disconnection and cleaning of the main drain pipe.

After installation, test the condensate pan and drain pipe. Pour sufficient water into the drain pan to fill the water seal and drain pipe. Check that the drain pan is completely emptied, there is no leakage at the drain pipe joints, and water is discharged from the end of the main drain pipe.

Make sure the unit is horizontal or slightly inclined towards the main drain so that the water in the drain pan can be completely drained. The unit shall be sloped at least 1/8 in./ft (10 mm/m) from the horizontal toward the drain outlet such that water drains freely from the pan. The following figure is for reference.

Vertical installation	Horizontal installation
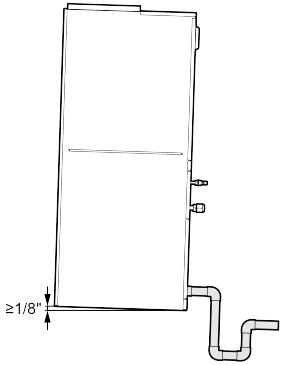	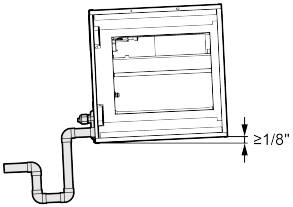

During cooling operation, condensation may form on the surface. An external drain pan must be installed, and the unit must be securely fastened to prevent falling. See the figure below.

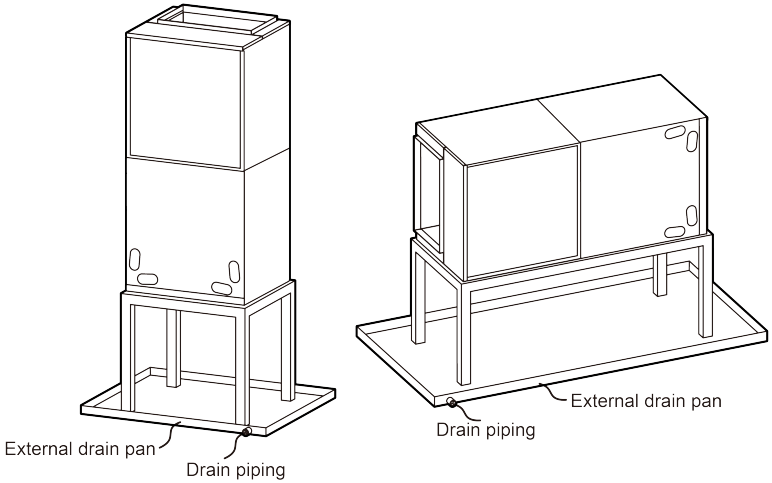

NOTE: The use of external drain pans shall comply with local regulatory requirements.

NOTICE The product may be filled with helium or other gas. Before any operating, please ensure the gas inside the unit has been totally released. Otherwise, it may cause property loss or personal injury.

4.3 Piping Work

4.3.1 Specification of Connection Pipe

Model	External Diameter (inch)	
	Gas Pipe	Liquid Pipe
WPFX24A-C WPFX36A-C WPFX48A-C WPFX60A-C	Φ3/4	Φ3/8

NOTE: Refrigerant lines must be adequately supported.

4.3.2 Piping Preparation

The connection of the gas pipe and the connection of the liquid pipe are screw connections. Prior to installation, the internal piping must be free of contaminants and protected against dust ingress. Any contamination may compromise the unit's operational integrity. The piping shall not contain any old refrigerant or old compressor oil.

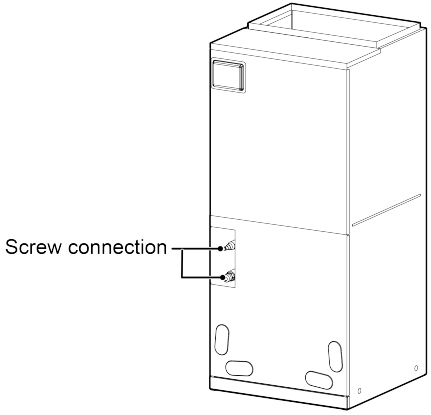

4.3.2.1 Screw Connection

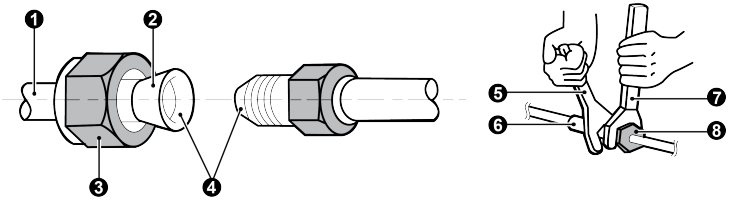

❶ Copper piping

❷ Oil applied
(To reduce friction with the flare nut)

❸ Flare nut

❹ Oil applied(Improves seal air-tightness)

❺ Spanner

❻ Piping union

❼ Torque wrench

❽ Flare nut

Pipe Diameter (inch)	Tightening Torque (N·m)
Φ1/4	15-30
Φ3/8	35-40
Φ1/2	45-50
Φ5/8	60-65
Φ3/4	70-75

Pipe Diameter (inch)	Tightening Torque (N·m)
Φ7/8	80-85

NOTE: Ensure the pipe is securely connected. Over-tightening may damage the bell mouth, while undertightening may result in refrigerant leakage.

4.4 Condensate Removal

(1) It is not allowed to connect the condensate drain pipe into waste pipe or other pipelines which are likely to produce corrosive or peculiar smell to prevent the smell from entering indoors or corrupt the unit.

(2) It is not allowed to connect the condensate drain pipe into rain pipe to prevent rain water from pouring in and cause property loss or personal injury.

(3) The unit shall be sloped at least 1/8 in./ft (10 mm/m) from the horizontal toward the drain outlet such that water drains freely from the pan whether the fan is ON or OFF.

(4) After the compressor stops, the indoor unit fan must be set with a delay of at least 3 minutes before shutting down by setting the thermostat.

(5) Condensate drain pipe should be connected into special drain system for air conditioner.

(6) Improper drainage may damage the house and property.

(7) The drain pan has primary and secondary drain connection. Condensate removal is performed by attaching a 3/4" PVC pipe to the evaporator coil pan and terminated in accordance with local or state Plumbing/HVAC codes. The installation must include a trap that is located closely to the evaporator coil. Do not over-tighten the drain connection in order to prevent possible damage to the evaporator drain pan. See the following figure for details of a typical condensate line trap.

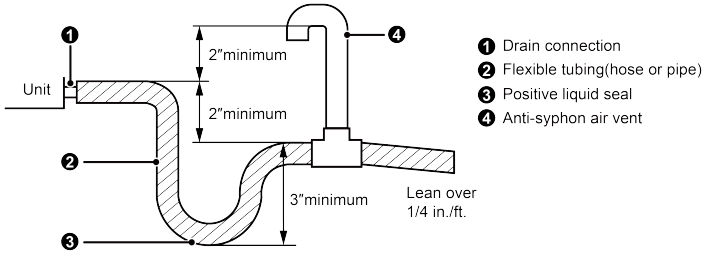

4.5 Ductwork

This air handler is designed for a complete supply and return ductwork system.

⚠ WARNING

Field ductwork must meet the National Fire Protection Association NFPA 90A, NFPA 90B and any applicable local ordinance.

Sheet metal ductwork run in unconditioned spaces must be insulated and covered with a vapor barrier. Fibrous ductwork may be used if constructed and installed in accordance with SMACNA Construction Standard on Fibrous Glass Ducts. Ductwork must comply with National Fire Protection Association as tested by U/L Standard 181 for Class I Air Ducts. Check local codes for requirements on ductwork and insulation.

Duct system must be designed within the range of external static pressure the unit is designed to operate against. It is important that the system airflow be adequate. Make sure supply and return ductwork, grills, special filters, accessories, etc. are accounted for in total resistance. See fan performance data in this manual.

Do not operate the unit without all ductwork completed.

Do not operate this product without all ductwork attached.

Inadequate ductwork that restricts airflow can result in improper performance and compressor or heater failure. Ductwork is to be constructed in a manner that limits restrictions and maintains suitable air velocity. Ductwork is to be sealed to the unit in a manner that will prevent leakage.

Return ductwork: Do not terminate the return ductwork in an area that can introduce toxic or objectionable fumes/odors into the ductwork. The return ductwork is to be introduced into the air handler bottom (up flow configuration).

Return Air Filters: Each installation must include a return air filter. This filtering may be performed at the air handler or externally such as a return air filter grille.

Do not install UV lights inside the unit or ductwork. UV lights can accelerate the aging of plastic and insulating materials, potentially causing water leaker, electrical short circuits, or fire hazards.

4.6 Electric Heater

The air handlers listed in this manual do not have factory installed electric heat. Electric heat is available as an accessory. Please refer to installation instructions

provided with heater kit for the correct installation procedure.

⚠WARNING Refer to the “Electric heater kits installation” section of this manual and the instructions provided with the heater kit for the correct installation procedure.

⚠WARNING The electrical characteristics of the air handler, the electric heater kit, and the supply power should be identical. This air handler does not have factory installed electric heater. Electric heater is available as an accessory. If installing this option, the only heater kits that can be used are the series as indicated below. It is forbidden to use the electric heater other than those recommended.

⚠WARNING Installation and debugging when attention to verify the switch sequence of electrical heating and fan, ensure the fan must be turned on when electric heating operation and ensure the electric heating is turned off before the fan to avoid unsafe. After turning off the electric heating, the indoor unit fan must be set with a delay of at least 3 minutes before shutdown by setting the thermostat.

⚠WARNING Refer to the “Fan Performance Data” section of this manual, otherwise it is possible to cause an exception and dry risk of electric heating.

⚠WARNING The supply ducts that are 5 feet away from electric heating must be at least 1 foot away from other combustibles or walls.

⚠WARNING Installation of the electric heater must strictly adhere to the manufacturer’s instructions. Unauthorized modification of the electric heating circuit is strictly prohibited, as it may cause fire hazards.

4.6.1 Electric Heater Kits Available

SN.	Kit1	Kit2	Description	Ref. Air Handler Use(ton)
1	LYQ-08-A 5000W/240V	21-4227-01 5000W/240V	Circuit breaker, 5kW heat strip	2.0/3.0/4.0/5.0
2	LYQ-08-C 10000W/240V	21-4216-03 10000W/240V	Circuit breaker, 10kW heat strip	2.0/3.0/4.0/5.0
3	LYQ-08-D 15000W/240V	21-4217-01 15000W/240V	Circuit breaker, 15kW heat strip	3.0/4.0/5.0
4	LYQ-08-E 20000W/240V	21-4228-01 20000W/240V	Circuit breaker, 20kW heat strip	4.0/5.0

Maximum air outlet temperature 114.9℃.

4.6.2 Electric Heater Kits Installation

⚠CAUTION

(1) Ensure that all power supply is disconnected prior to installing the heater kit.

(2) A means of strain relief and conductor protection must be provided at the supply wire entrance into cabinet.

(3) Use copper conductors only.

(4) Installation must follow national electric code and other applicable codes.

(5) If this appliance is installed in an enclosed area such as a garage or utility room with any carbon monoxide producing appliance, ensure the area is properly ventilated.

1) Refer to the Table for appropriate heater kit.
2) Check any physical damage, do not install damaged heater kit.
3) Remove the upper access panel from air handler.
4) Remove cover plate from air handler.
5) Slide the heater kit in to the slot and secure element plate with previously removed screws.
6) Before installing the electric heating, unplug the X1 terminal, and insert the plug-in terminals on the electric heating to the X1 and X2 terminals respectively. The power line of the unit is connected through an electrically heated circuit breaker.
7) Insert power leads into the circuit breaker lugs or stripped red and black wires (for heater kit without circuit breaker) and tighten.
8) Connect the grounding wire to the grounding terminal; when installing the electric heater, the grounding screw must use an M6 screw or larger grounding screw.
9) Knock off appropriate area of the plastic circuit breaker cover on the access panel of the air handler. Knock off the holes according to the actual installation number and positions of circuit breakers. If circuit breaker is not installed, do not knock off the holes; otherwise, electric shock may occur.
10) Replace access panel and check operation.

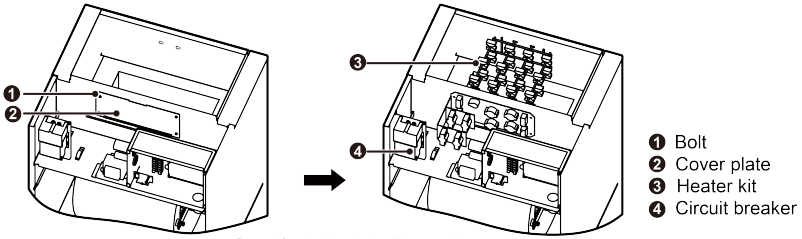

Specific in kind shall prevail

11) Connection of power cords and thermostat wires.

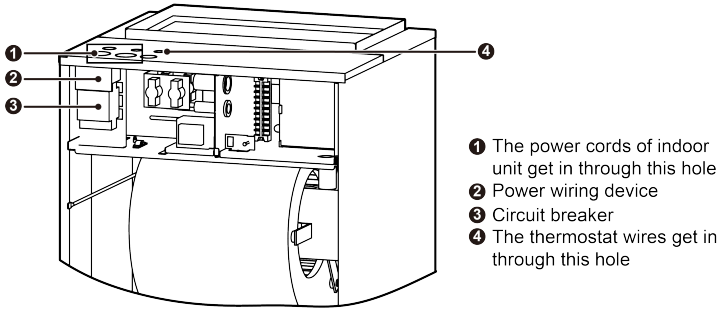

Specific in kind shall prevail

4.7 Electrical Installation

4.7.1 Requirement and Notice on Electrical Installation

⚠WARNING

The electrical installation for the air conditioner should observe the following requirements:

①. The electrical installation must be conducted by professionals in compliance with local laws and regulations and the instructions in this manual. Never extend the power cords. The electric circuit must be equipped with a circuit breaker and air switch both with sufficient capacity.

②. The unit's operating power must be within the nominal range stated in the instruction manual. Use a specialized power circuit for the air conditioner. Do not draw power from another power circuit.

③. The air conditioner circuit should be at least 1.5m away from any inflammable surface.

④. The external power cords, the thermostat wires and thermostat must be effectively fixed.

⑤. The external power cords, the thermostat wires and thermostat can't directly contact any hot objects. For example: they must not contact chimney pipes, warm gas pipes or other hot objects.

⑥. The external power cords, the thermostat wires and thermostat must not be squeezed. Never pull, stretch or bend the wires.

⑦. The external power cords, the thermostat wires and thermostat must not collide with any metal beam or edge on the ceiling, or touch any metal burrs or sharp metal edge around.

⑧. Connect wires correspondingly by referring to the circuit diagram labeled on the unit or electric box. Screws must be tightened up. Slipped screws must be replaced by specialized flat-head screws.

⑨. Wiring terminals should be connected firmly to the terminal board. Loose connection is forbidden. All wiring must be firmly secured. Loose terminal connections may result in terminal overheating, leading to equipment failure or fire hazards.

⑩. After the electrical installation is finished, please use wire clamps to secure the power cords and the thermostat wires. Make sure the wires are not clamped too tight.

⑪. The wire gauge of power cord should be large enough. Damaged power cords or other wires must be replaced by specialized wires. Wiring work must be done according to national wiring rules and regulations.

⑫. Wiring must not contact or rest against refrigerant lines or any moving parts within the equipment.

⑬. Electrical wiring must not cross signal wiring. Crossing may cause signal distortion, electromagnetic interference (EMI), or circuit board damage.

⑭. Power or signal cables must be protected in metal conduit to prevent rodent and mechanical damage.

⑮. The electrical box cover must be securely closed.

4.7.2 Electrical Parameters

Model	Power Supply	Minimum Circuit Ampacity (A)	Maximum Overcurrent Protection (A)	Fuse Capacity (A)
WPFX24A-C	208/230V-1Ph-60Hz	4.7	15	3.15
WPFX36A-C		5.3		
WPFX48A-C		7.1		
WPFX60A-C		7.7		

NOTICE

①. Fuse is located on the main board.

②. Install a circuit breaker at every power terminal near the units (indoor unit and thermostat) with at least 3mm contact gap. The units must be able to be plugged or unplugged.

③. Circuit breaker and power cord specifications listed in the above table are determined based on the maximum power input of the units.

④. Specifications of circuit breaker are based on a working condition where the working temperature is 40℃. If working condition changes, please adjust the specifications according to national standards.

⑤. Adopt 5pc of AWG18 power cords to be the communication cords between indoor unit and thermostat. The maximum length is 30m. Please select a proper length according to local conditions. Communication cords must not be twisted together.

⑥. The wire gauge of communication cord should not be less than AWG18. It's recommended to use AWG18 power cords as the communication cords.

⑦. Continuous air circulation required for proper functioning. Unit must be powered except for service.

⑧. All wires must go through the tube.

⑨. Wiring through the holes on the cover of the electronic control box must be armored cable to prevent abrasion.

4.7.3 Connection of Power Cords and Thermostat Wires

(1) For solid wires (as shown below):

1) Use wire cutters to cut off the wire end and then peel away about 25mm of the insulation layer.

2) Use a screwdriver to unscrew the terminal screw on the terminal board.
3) Use nippers to bend the solid wire into a ring that fits the terminal screw.
4) Form a proper ring and then put it on the terminal board. Use a screwdriver to tighten up the terminal screw.

(2) For strand wires (as shown below):

1) Use wire cutters to cut off the wire end and then peel away about 10mm of the insulation layer.
2) Use a screwdriver to unscrew the terminal screw on the terminal board.
3) Use a round terminal fastener or clamp to fix the round terminal firmly on the peeled wire end.
4) Locate the round terminal conduit. Use a screwdriver to replace it and tighten up the terminal screw (as shown below).

Unit: mm(inch)

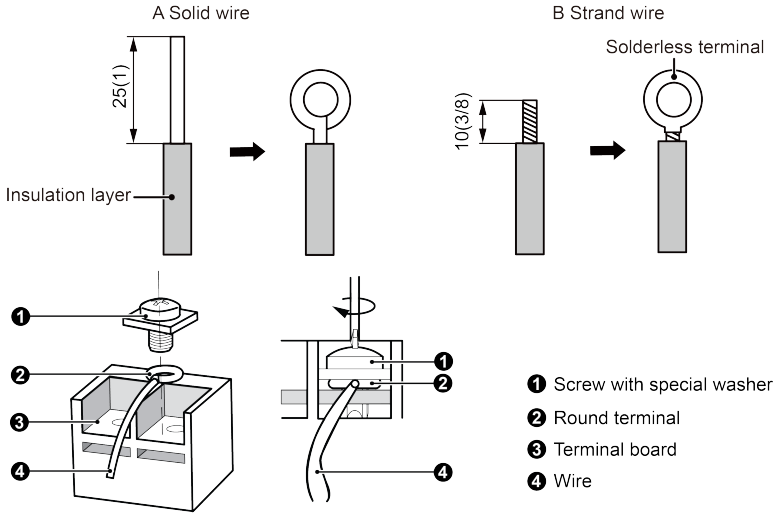

(3) How to connect the thermostat wires and power cords.

Lead the thermostat wires and power cords through the insulation tube. Then fix the wires with wire clamps (as shown in the following figure.)

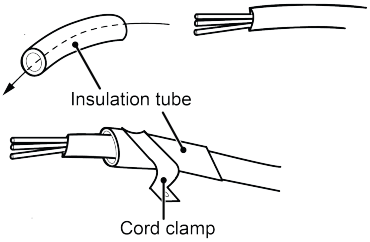

⚠ WARNING

①. Before working, please check whether the indoor unit and thermostat are powered on.

②. Match the terminal numbers and wire colors with the colors indicated in the indoor unit.

③. Wrong wire connection may burn the electrical components.

④. Connect the wires firmly to the wiring box. Incomplete installation may lead to fire hazard.

⑤. Please use wire clamps to secure the external covers of connecting wires. (Insulators must be clamped securely; otherwise, electric leakage may occur.)

⑥. Ground wire should be connected.

Electrical wiring 1

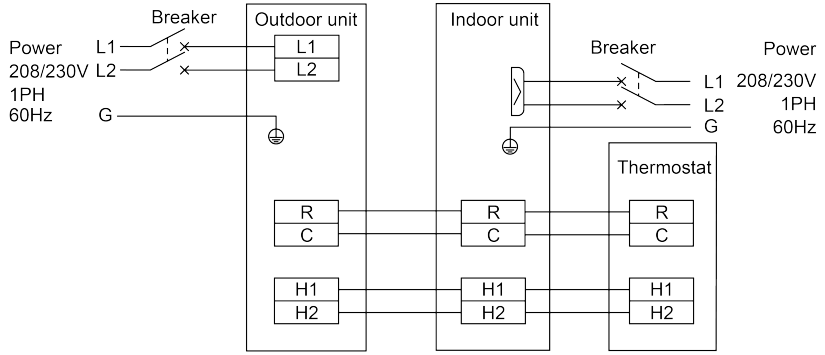

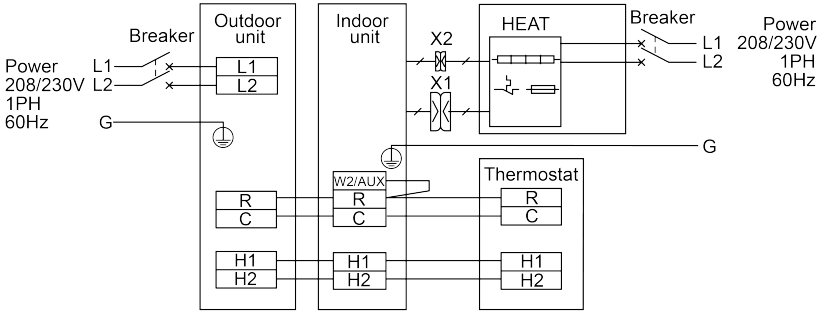

NOTE: In the first wiring configuration, if electric heating is selected, W2/AUX and R need to be shorted together.

Electrical wiring 2

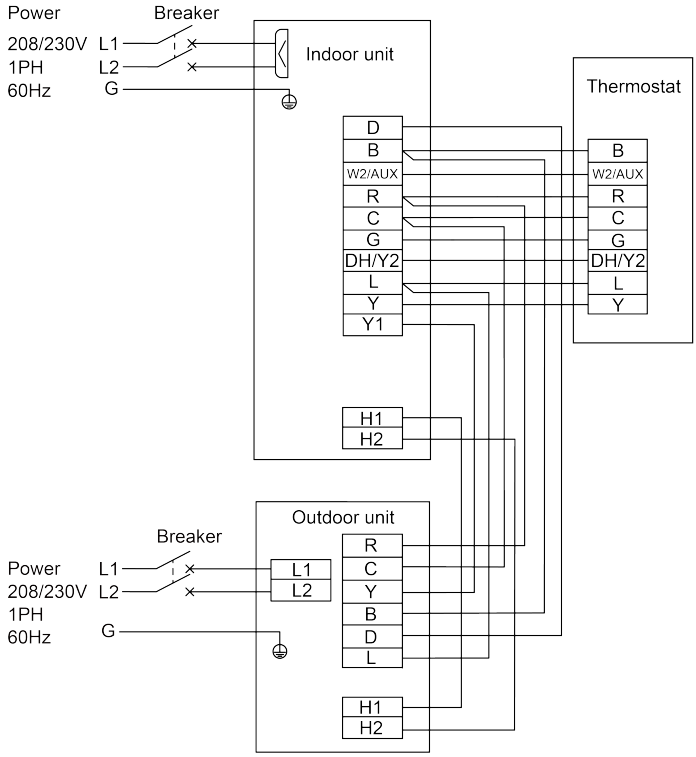

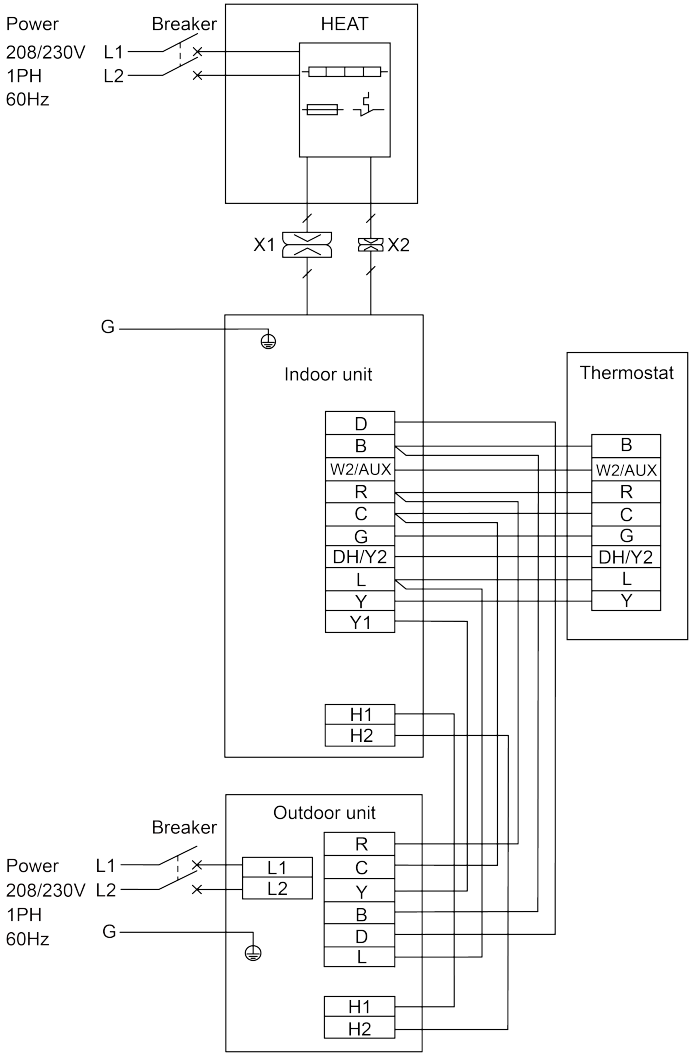

NOTE:

Y means Compressor control signal for the outdoor unit.

B which is energized under the heating mode means 4-way valve control signal.

D means defrosting signal.

R means 24V AC power supply.

C means 24V common.

G means indoor unit fan signal for the indoor unit.

W2/AUX means heater control signal.

L means refrigerant leakage protection signal.

DH means dehumidify signal. (The third DIP switch marked Cool (SA1) on the indoor unit's main control board is in the number position)

Y2 means high demand signal. (The third DIP switch marked Cool (SA1) on the indoor unit's main control board is in the 'on' position)

Y1 means thermostat and compressor output signals.

H1/H2 means RS485 communication.

NOTE: For cooling only unit, there is no need to connect the B and D terminals.

NOTE: When outdoor defrosts, D of outdoor unit will send 24V signal to avoid cold winds.

NOTE: L must be connected and connected to the outdoor unit.

NOTE: Breaker must be incorporated in the fixed wiring in accordance with the wiring rules.

NOTE: When installing electric heating, M6 screws are required for grounding screws.

NOTE: The unit must be used with a specific thermostat, the thermostat model is WK-010WC1.

⚠ WARNING

①. High and low voltage wires should be led through different rubber rings of the electric box cover.

②. Do not bundle up the thermostat wires or lay them side by side, otherwise errors will occur.

③. High and low voltage wires should be secured separately. Secure the former ones with big clamps and the latter ones with small clamps.

④. Use screws to tighten up the thermostat wires and power cords of unit on the terminal board. Wrong connection may lead to fire hazard.

⑤. If the thermostat wires of unit and power cords are not correctly connected, the air conditioner may get damaged.

⑥. Ground the unit through connecting the ground wire.

⑦. The units should comply with applicable local and national rules and regulations on power consumption.

⑧. When connecting the power cords, make sure the phase sequence of the power supply matches with the corresponding terminals, otherwise the compressor will get reversed and operate abnormally.

5 Installation Check and Trial Run

5.1 Checking Items after Installation

Items to be checked	Problems might happen due to improper installation	Check
Check if each part of the unit have been installed reliably.	The unit might fall off, vibrate or emit noise.	
Check if the unit has passed through leakage test.	It may cause deficiency of cooling (heating) capacity.	
Check if the unit has been insulated properly.	It may cause condensation and water drop.	
Check if the water can be drained fluently.	It may cause condensation and water drop.	
Check if the power voltage accords with that on the nameplate.	Malfunction might happen and parts might be burned.	
Check if the wiring and pipe line has been installed correctly.	Malfunction might happen and parts might be burned.	
Check if the unit has been earthed soundly.	Hazard of electricity leakage.	
Check if the wiring conforms to the wire gage.	Malfunction might happen and parts might be burned.	
Check if there is obstruction blocking the air inlet/outlet.	It may cause deficiency of cooling (heating) capacity.	
Check if the piping length and refrigeration charging volume has been recorded.	Uncertain about the refrigerant charging volume.	
Check if the piping connection and valves have been set properly.	It may cause unit abnormality and damage the unit.	
Make sure there is no crack among air return and supply pipe.	It may cause air leak, vibration and noise.	
Check if the panel is mounted firmly.	It may cause air leak, vibration and condensation.	

5.2 Trial Run

5.2.1 Preparative for Trial Run

(1) Never power on the unit until all the installation work has been done.

(2) All the control circuit and wiring has been connected correctly and soundly. Valves on the gas and liquid line should be completely open.

(3) All the scattered objects should be removed, especially metal filing, thrum and clip.

(4) Check if the unit appearance and piping system has been damaged during transportation or handling.

(5) Check if the terminals are loose and the phases are correct.

5.2.2 Trial Run

(1) Trial run can be operated by professional personnel only after above items have been checked (items to be checked as per actual condition).

(2) Power on the unit and press ON/OFF button to activate.

(3) After compressor starting up, please immediately stop the unit when abnormal sound emits.

(4) Trial run under several modes and check if the unit operates normally.

6 Common Malfunction and Elimination

⚠ WARNING
(1) If abnormal things (for example, awful smell) occur, please stop the unit immediately and disconnect power. Then contact Continental authorized service center. If the unit continues to run in abnormal situations, it may get damaged and cause electric shock or fire hazard.
(2) Do not repair the air conditioner by yourself. Improper maintenance will cause electric shock or fire hazard. Please contact Continental authorized service center and send for professional service staff to repair.

If the unit doesn't run normally, please check the following items before ask for service.

Phenomenon	Reason	Treatment
The unit can not be activated.	The unit doesn't connect with power supply.	Connect with power supply.
	Low voltage.	Check if circuit voltage is within rated scope.
	Fuse broken or breaker trips off.	Replace fuse or connect breaker.
The unit operates but stops immediately.	Air inlet/outlet of indoor unit is blocked.	Remove obstacles.
Abnormal cooling or heating.	Air inlet/outlet of indoor unit is blocked.	Remove obstacles.
	Inappropriate temperature setting.	Adjust setting at thermostat.
	Doors or windows are opened.	Close the door or windows.
	Direct sunshine.	Draw curtain or louver.
	Too much heat source in the room.	Reduce heat source.
	Filter screen is blocked by dirt.	Clean the filter.

NOTE: If reasons are still unclear after checking above items, please contact Continental service center and show phenomena and models.

Following circumstances are not malfunction.

“Malfunction”		Reason
Unit doesn’t run.	When unit is started immediately after it is just turned off.	Overload protection switch makes it run after 3 minutes delay.
	When power is turned on.	Standby operating for about 1 minute.
Mist comes from the unit.	Under cooling.	Indoor high humidity air is cooled rapidly.
The unit emits noise.	Slight cracking sound is heard when just turned on.	It is noise when electronic expansion valve initialization.
	There is consecutive sound when cooling.	That's sound for gas refrigerant flowing in the unit.
	There is sound when unit starts or stops.	That's sound for gas refrigerant stops flowing.
	There is slight and consecutive sound when unit is running or after running.	That's sound for operation of drainage system.
The unit blows out dust.	When unit runs after no operation for a long period.	Dust in indoor unit is blew out.
The unit emits odor.	Operating.	The room odor absorbed by the unit is blew out again.
Indoor unit still runs after switch off.	After every indoor unit receive "stop" signal, fan will keep running.	Indoor fan can be set as “ON” or “AUTO” mode. Under “ON” mode, indoor fan will keep running after switch off the unit.

There are LED indicators on the main board of the indoor unit, which are used to display the operating status and malfunction information of the unit.

LED indicator	Color	Function
Power Indicator	Red	Indoor unit main board is powered on, Power Indicator is on.
Running Indicator	Green	After detecting the indoor fan turn-on signal, the running indicator light is on, when detecting the indoor fan turning-off signal, the running indicator light is off. When detecting a system failure, the running indicator light flashes.

LED indicator	Color	Function
Refrigerant Leakage Indicator	Orange	When detecting the refrigerant leakage protection, refrigerant sensor failure and refrigerant sensor communication failure, the Refrigerant Leakage Indicator light displays the fault type. Otherwise it will always flash.
Communication Indicator	Yellow	Flash when receiving the communication data, otherwise it will be steady on to display the fault type.

Different running indicator flashing light means different system failure.

Malfunction	LED indicator	Running Indicator status	Remark
Indoor unit refrigerant leakage protection	Refrigerant Leakage Indicator	Light out 3S then flash once	Flash means light on 0.5S then light out 0.5S
Refrigerant sensor error		Light out 3S then flash twice	
Refrigerant sensor communication error		Light out	-
Communication error	Communication Indicator	Steady on	Indoor unit and outdoor unit communication error
Indoor Jumper cap failure	Running Indicator	Light out 3S then flash once	Flash means light on 0.5S then light out 0.5S
Indoor fan failure		Light out 3S then flash twice	
Adhesion protection by electric heating		Light out 3S then flash three times.	
Indoor ambient temperature sensor error		Light out 6S then flash once	
Indoor pipe temperature sensor error		Light out 6S then flash twice	
Indoor air outlet temperature sensor error		Light out 6S then flash three times.	
Evaporator inlet pipe temperature sensor error		Light out 6S then flash four times.	
Evaporator outlet pipe temperature sensor error		Light out 6S then flash five times.	

NOTE: When the indoor unit has indoor unit refrigerant leakage protection, refrigerant sensor error or refrigerant sensor communication error, the buzzer will ring for 2s and stop for 5s, and the fan of the indoor unit will be forced to open, and the Y signal will be disconnected to stop the outdoor unit.

7 Maintenance and Care

Regular check, maintenance and care should be performed by professional personnel, which will prolong the unit life span.

7.1 Drain Pipe

Regularly check if the drain pipe is clogged in order to drain condensate smoothly.

7.2 Notice before Seasonal Use

(1) Check if the inlet/outlet of the indoor unit is clogged.

(2) Check if the ground wire is earthed reliably.

(3) Check if the filter screen has been set soundly.

(4) Check if the unit is installed firmly. If there is something abnormal, please contact the local appointed service center.

7.3 Maintenance after Seasonal Use

(1) Cut off main power supply of the unit.

(2) Clean filter screen of indoor units.

(3) Clean the dust of sundries on the indoor units.

(4) In the event of rusting, use the anti-rust paint to stop spreading of rust.

7.4 Parts Replacement

⚠ WARNING

Do not use means to accelerate the defrosting process or to clean, other than those recommended by the manufacturer. The appliance shall be stored in a room without continuously operating ignition sources (for example: open flames, an operating gas appliance or an operating electric heater. Do not pierce or burn. Be aware that refrigerants may not contain an odor.

7.5 Unventilated Areas

⚠WARNING

If appliances with A2L REFRIGERANTS connected via an air duct system to one or more rooms are installed in a room with an area less than Amin, that room shall be without continuously operating open flames (for example an operating gas appliance) or other POTENTIAL IGNITION SOURCES (for example an operating electric heater, hot surfaces). A flame-producing device may be installed in the same space if the device is provided with an effective flame arrest;

⚠WARNING

"Auxiliary devices which may be a POTENTIAL IGNITION SOURCE shall not be installed in the duct work. Examples of such POTENTIAL IGNITION SOURCES are hot surfaces with a temperature exceeding 648℃ and electric switching devices";

⚠WARNING

That only auxiliary devices approved by the appliance manufacturer or declared suitable with the refrigerant shall be installed in connecting ductwork.

8 After-Sales Service

In case the air-conditioning unit you bought has any quality problem or you have any inquiry, please contact the local after-sales service agency designated by factory.

Warranty should meet the following requirements:

(1) First run of the unit should be operated by professional personnel from factory appointed service center.

(2) Only factory manufactured accessories can be used on the machine.

(3) All the instructions listed in this manual should be followed.

(4) Warranty will be automatically invalid if fails to obey any item mentioned above.

9 Qualification of Worker

The manual shall contain specific information about the required qualification of the working personnel for maintenance, service and repair operations. Every working procedure that affects safety means shall only be carried out by competent persons. The training of these procedures is carried out by national training organisations or manufacturers that are accredited to teach the relevant national competency standards that may be set in legislation. The achieved competence should be documented by a certificate.

Examples for such working procedures are:

(1) breaking into the refrigerating circuit;

(2) opening of sealed components;

(3) opening of ventilated enclosures.

10 Transportation, Marking and Storage for Units that Employ Flammable Refrigerants

10.1 General

The following information is provided for units that employ FLAMMABLE REFRIGERANTS.

10.2 Transport of Equipment Containing Flammable Refrigerants

Attention is drawn to the fact that additional transportation regulations may exist with respect to equipment containing flammable gas. The maximum number of pieces of equipment or the configuration of the equipment permitted to be transported together will be determined by the applicable transport regulations.

10.3 Marking of Equipment Using Signs

Signs for similar appliances used in a work area are generally addressed by local regulations and give the minimum requirements for the provision of safety and/ or health signs for a work location.

All required signs are to be maintained and employers should ensure that employees receive suitable and sufficient instruction and training on the meaning of appropriate safety signs and the actions that need to be taken in connection with these signs.

The effectiveness of signs should not be diminished by too many signs being placed together.

Any pictograms used should be as simple as possible and contain only essential details.

10.4 Disposal of Equipment Using Flammable Refrigerants

See national regulations.

10.5 Storage of Equipment/Appliances

The storage of the appliance should be in accordance with the applicable regulations or instructions, whichever is more stringent.

10.6 Storage of Packed (Unsold) Equipment

Storage package protection should be constructed in such a way that mechanical damage to the equipment inside the package will not cause a leak of the REFRIGERANT CHARGE.

The maximum number of pieces of equipment permitted to be stored together will be determined by local regulations

11 Information on Servicing

11.1 General

The manual shall contain specific information for service personnel according to 11.2 to 11.10.

11.2 Checks to the Area

Prior to beginning work on systems containing FLAMMABLE REFRIGERANTS, safety checks are necessary to ensure that the risk of ignition is minimised. For repair to the REFRIGERATING SYSTEM,11.3 to 11.7 shall be completed prior to conducting work on the system.

11.3 Work Procedure

Work shall be undertaken under a controlled procedure so as to minimise the risk of a flammable gas or vapour being present while the work is being performed.

11.4 General Work Area

All maintenance staff and others working in the local area shall be instructed on the nature of work being carried out. Work in confined spaces shall be avoided.

11.5 Checking for Presence of Refrigerant

The area shall be checked with an appropriate refrigerant detector prior to and during work, to ensure the technician is aware of potentially toxic or flammable atmospheres. Ensure that the leak detection equipment being used is suitable for use with all applicable refrigerants, i.e. non-sparking, adequately sealed or intrinsically safe.

11.6 Presence of Fire Extinguisher

If any hot work is to be conducted on the refrigerating equipment or any associated parts, appropriate fire extinguishing equipment shall be available to hand. Have a dry powder or CO2 fire extinguisher adjacent to the charging area.

11.7 No Ignition Sources

No person carrying out work in relation to a REFRIGERATING SYSTEM which involves exposing any pipe work shall use any sources of ignition in such a manner that it may lead to the risk of fire or explosion. All possible ignition sources, including cigarette smoking, should be kept sufficiently far away from the site of installation, repairing, removing and disposal, during which refrigerant can possibly be released to the surrounding space. Prior to work taking place, the area around the equipment is to be surveyed to make sure that there are no flammable hazards or ignition risks. “No Smoking” signs shall be displayed.

11.8 Ventilated Area

Ensure that the area is in the open or that it is adequately ventilated before breaking into the system or conducting any hot work. A degree of ventilation shall continue during the period that the work is carried out. The ventilation should safely disperse any released refrigerant and preferably expel it externally into the atmosphere.

11.9 Checks to the Refrigerating Equipment

Where electrical components are being changed, they shall be fit for the purpose and to the correct specification. At all times the manufacturer's maintenance and service guidelines shall be followed. If in doubt, consult the manufacturer's technical department for assistance. The following checks shall be applied to installations using FLAMMABLE REFRIGERANTS:

(1) The actual REFRIGERANT CHARGE is in accordance with the room size within which the refrigerant containing parts are installed;

(2) The ventilation machinery and outlets are operating adequately and are not obstructed;

(3) If an indirect refrigerating circuit is being used, the secondary circuit shall be checked for the presence of refrigerant;

(4) Marking to the equipment continues to be visible and legible. Markings and signs that are illegible shall be corrected;

(5) Refrigerating pipe or components are installed in a position where they are unlikely to be exposed to any substance which may corrode refrigerant containing components, unless the components are constructed of materials which are inherently resistant to being corroded or are suitably protected against being so corroded.

11.10 Checks to Electrical Devices

Repair and maintenance to electrical components shall include initial safety checks and component inspection procedures. If a fault exists that could compromise safety, then no electrical supply shall be connected to the circuit until it is satisfactorily dealt with. If the fault cannot be corrected immediately but it is necessary to continue operation, an adequate temporary solution shall be used. This shall be reported to the owner of the equipment so all parties are advised. Initial safety checks shall include:

(1) That capacitors are discharged: this shall be done in a safe manner to avoid possibility of sparking;

(2) That no live electrical components and wiring are exposed while charging, recovering or purging the system;

(3) That there is continuity of earth bonding.

⚠ WARNING

Only auxiliary devices approved by the appliance manufacturer or declared suitable with the refrigerant shall be installed in connecting ductwork for duct connected appliances, false ceilings or drop ceilings may be used as a return air plenum if a REFRIGERANT DETECTION SYSTEM is provided in the appliance and any external connections are also provided with a sensor immediately below the return air plenum duct joint.

11.11 Pipe Installation

That pipe-work including piping material, pipe routing, and installation shall include protection from physical damage in operation and service, and be in compliance with national and local codes and standards, such as ASHRAE 15, ASHRAE 15.2, IAPMO Uniform Mechanical Code, ICC International Mechanical Code, or CSA B52. All field joints shall be accessible for inspection prior to being covered or enclosed.

That after completion of field piping for split systems, the field pipework shall be pressure tested with an inert gas and then vacuum tested prior to refrigerant charging, according to the following requirements field-made refrigerant joints indoors shall be tightness tested. The test method shall have a sensitivity of 5 grams per year of refrigerant or better under a pressure of at least 0,25 times the maximum allowable pressure. No leak shall be detected.

The minimum test pressure for the low side of the system shall be the low side design pressure and the minimum test pressure for the high side of the system shall be the high side design pressure, unless the high side of the system, cannot be isolated from the low side of the system in which case the entire system shall be pressure tested to the low side design pressure.

12 Sealed Electrical Components shall be Replaced

13 Intrinsically Safe Components must be Replaced

14 Cabling

Check that cabling will not be subject to wear, corrosion, excessive pressure, vibration, sharp edges or any other adverse environmental effects. The check shall also take into account the effects of aging or continual vibration from sources such as compressors or fans.

15 Detection of Flammable Refrigerants

Under no circumstances shall potential sources of ignition be used in the searching for or detection of refrigerant leaks. A halide torch (or any other detector using a naked flame) shall not be used.

The following leak detection methods are deemed acceptable for all refrigerant systems.

Electronic leak detectors may be used to detect refrigerant leaks but, in the case of FLAMMABLE REFRIGERANTS, the sensitivity may not be adequate, or may need re-calibration. (Detection equipment shall be calibrated in a refrigerant-free area.) Ensure that the detector is not a potential source of ignition and is suitable for the refrigerant used. Leak detection equipment shall be set at a percentage of the LFL of the refrigerant and shall be calibrated to the refrigerant employed, and the appropriate percentage of gas (25 % maximum) is confirmed.

Leak detection fluids are also suitable for use with most refrigerants but the use of detergents containing chlorine shall be avoided as the chlorine may react with the refrigerant and corrode the copper pipe-work.

NOTE Examples of leak detection fluids are

(1) Bubble method.

(2) Fluorescent method agents.

If a leak is suspected, all naked flames shall be removed/extinguished.

If a leakage of refrigerant is found which requires brazing, all of the refrigerant shall be recovered from the system, or isolated (by means of shut off valves) in a part of the system remote from the leak. Removal of refrigerant shall be according to Clause 16.

16 Removal and Evacuation

When breaking into the refrigerant circuit to make repairs - or for any other purpose - conventional procedures shall be used. However, for flammable refrigerants it is important that best practice be followed, since flammability is a consideration. The following procedure shall be adhered to: The refrigerant charge shall be recovered into the correct recovery cylinders if venting is not allowed by local and national codes. For appliances containing flammable refrigerants, the system shall be purged with oxygen-free nitrogen to render the appliance safe for flammable refrigerants. This process might need to be repeated several times.

- safely remove refrigerant following local and national regulations;
- evacuate;
- purge the circuit with inert gas (optional for A2L);
- evacuate (optional for A2L);
- continuously flush or purge with inert gas when using flame to open circuit;
- open the circuit.

Compressed air or oxygen shall not be used for purging refrigerant systems.

For appliances containing flammable refrigerants, refrigerants purging shall be achieved by breaking the vacuum in the system with oxygen-free nitrogen and continuing to fill until the working pressure is achieved, then venting to atmosphere, and finally pulling down to a vacuum (optional for A2L). This process shall be repeated until no refrigerant is within the system (optional for A2L). When the final oxygen-free nitrogen charge is used, the system shall be vented down to atmospheric pressure to enable work to take place.

The outlet for the vacuum pump shall not be close to any potential ignition sources, and ventilation shall be available.

17 Charging Procedures

In addition to conventional charging procedures, the following requirements shall be followed.

(1) Ensure that contamination of different refrigerants does not occur when using charging equipment.

(2) Hoses or lines shall be as short as possible to minimise the amount of refrigerant contained in them.

(3) Cylinders shall be kept in an appropriate position according to the instructions.

(4) Ensure that the REFRIGERATING SYSTEM is earthed prior to charging the system with refrigerant.

(5) Label the system when charging is complete (if not already).

(6) Extreme care shall be taken not to overfill the REFRIGERATING SYSTEM.

Prior to recharging the system, it shall be pressure-tested with the appropriate purging gas. The system shall be leak-tested on completion of charging but prior to commissioning. A follow up leak test shall be carried out prior to leaving the site.

18 Decommissioning

Before carrying out this procedure, it is essential that the technician is completely familiar with the equipment and all its detail. It is recommended good practice that all refrigerants are recovered safely.

Prior to the task being carried out, an oil and refrigerant sample shall be taken in case analysis is required prior to re-use of recovered refrigerant. It is essential that electrical power is available before the task is commenced.

(1) Become familiar with the equipment and its operation) Isolate system electrically.

(2) Before attempting the procedure, ensure that:

  1) Mechanical handling equipment is available, if required, for handling refrigerant cylinders;
  2) All personal protective equipment is available and being used correctly;
  3) The recovery process is supervised at all times by a competent person;
  4) Recovery equipment and cylinders conform to the appropriate standards.

(3) Pump down refrigerant system, if possible.

(4) If a vacuum is not possible, make a manifold so that refrigerant can be removed from various parts of the system.

(5) Make sure that cylinder is situated on the scales before recovery takes place.

(6) Start the recovery machine and operate in accordance with instructions.

(7) Do not overfill cylinders (no more than 80 % volume liquid charge).

(8) Do not exceed the maximum working pressure of the cylinder, even temporarily.

(9) When the cylinders have been filled correctly and the process completed, make sure that the cylinders and the equipment are removed from site promptly and all isolation valves on the equipment are closed off.

(10) Recovered refrigerant shall not be charged into another REFRIGERATING SYSTEM unless it has been cleaned and checked.

19 Labelling

Equipment shall be labelled stating that it has been decommissioned and emptied of refrigerant. The label shall be dated and signed. For appliances containing FLAMMABLE REFRIGERANTS, ensure that there are labels on the equipment stating the equipment contains FLAMMABLE REFRIGERANT.

20 Recovery

When removing refrigerant from a system, either for servicing or decommissioning, it is recommended good practice that all refrigerants are removed safely.

When transferring refrigerant into cylinders, ensure that only appropriate refrigerant recovery cylinders are employed. Ensure that the correct number of cylinders for holding the total system charge is available. All cylinders to be used are designated for the recovered refrigerant and labelled for that refrigerant (i.e.special cylinders for the recovery of refrigerant). Cylinders shall be complete with pressure-relief valve and associated shut-off valves in good working order. Empty recovery cylinders are evacuated and, if possible, cooled before recovery occurs.

The recovery equipment shall be in good working order with a set of instructions concerning the equipment that is at hand and shall be suitable for the recovery of the flammable refrigerant. If in doubt, the manufacturer should be consulted. In addition, a set of calibrated weighing scales shall be available and in good working order. Hoses shall be complete with leak-free disconnect couplings and in good condition.

The recovered refrigerant shall be processed according to local legislation in the correct recovery cylinder, and the relevant waste transfer note arranged. Do not mix refrigerants in recovery units and especially not in cylinders. If compressors or compressor oils are to be removed, ensure that they have been evacuated to an acceptable level to make certain that flammable refrigerant does not remain within the lubricant. The compressor body shall not be heated by an open flame or other ignition sources to accelerate this process. When oil is drained from a system, it shall be carried out safely.

CONTINENTAL

Address | Adresse

Wolf Steel Ltd.

24 Napoleon Road, Barrie, Ontario, L4M 0G8, Canada

103 Miller Drive, Crittenden, Kentucky, 41030, USA

7200, Route Transcanadienne, Montréal, Québec
Canada H4T 1A3P

Phone | Téléphone

Canada

1-866-820-8686

Online | En ligne

continentalcomfort.com

hvac@napoleon.com

66139915513