Honeywell

3G SmartVFD Three Contactor and Three Contactor Auto-Bypass Assemblies

INSTALLATION INSTRUCTIONS

APPLICATION

Three Contactor Bypass

The 3G SmartVFD Two Contactor Bypass Assemblies channel electrical power either through or around the variable frequency drive (VFD).

INSTALLATION

When Installing This Product

1. Read these instructions carefully. Failure to follow them could damage the product or cause a hazardous condition.
2. Check the ratings given in the instructions, Honeywell 3G SmartVFD manual, and on the product to make sure the product is suitable for your application.
3. Verify bypass model is correct; no damage has been incurred; no screws, connections, or terminations are loose.
4. Installer must be a trained, experienced service Technician, with VFD operation experience.
5. After installation is complete, check out product operation as provided in these instructions.

⚠ WARNING

Can Cause Serious Injury or Death.

1. Installation requires work with voltages that may cause serious injury or death.
2. This instruction manual is intended as a guide only. End user is responsible for proper application of this assembly, insuring proper conformance, directives, intended use and maintaining all safety practices as described in Honeywell 3G SmartVFD manual, local codes, local safety authorities.
3. Disconnect power supply before installation, and before any servicing.

⚠ CAUTION

Equipment Damage Hazard.
Can short equipment circuitry.
Disconnect power supply before installation.

Location and Mounting

Locate the device in a clean, dry, well-ventilated area with an ambient temperature below 113°F (45C).

Refer to 3G SmartVFD manual Chapter 3 "MECHANICAL INSTALLATION" for free air space requirements above and to the sides of 3G SmartVFD's.

WIRING

IMPORTANT

All wiring must agree with applicable codes, ordinances and regulations.
Variable frequency drive can store energy. Refer to 3G SmartVFD manual *for safe work practices and appropriate wait times before servicing after equipment power has been De-energized.*

All safety, warning and caution information located in Honeywell 3G SmartVFD Installation and User Guide must be read, understood and followed.

1. Ensure that bypass panel voltage corresponds with that of the power supply.
2. To access the disconnect panel wiring compartment:
   a. Ensure the main disconnect handle is in the OFF position.
   b. Open the cover.
   c. Test for power.
3. Refer to Honeywell 3G SmartVFD manual Chapter 4 "ELECTRICAL INSTALLATION" for proper power and control wire sizing information
4. Terminate input three phase power wiring to line terminals:"L1", "L2", and "L3" on main disconnect. Refer to bypass panel schematic
5. Terminate three phase motor wiring to motor terminals "T1", "T2", and "T3". Refer to schematic.
6. Terminate all VFD control wiring to the proper terminals in the VFD/bypass panel. Refer to bypass panel schematic.
7. Leave jumper J1 on bypass panel terminals 1 & 3 if fire/smoke/safety shutdown is not used. If this shutdown is used, remove jumper J1 and terminate to bypass panel terminals 1 & 3.
8. If equipped with Auto bypass, leave jumper J2 on bypass panel terminals 4&5 for auto bypass operation. Remove jumper J2 for manual bypass operation.

Refer to Fig 2.0, 3 Contactor Wiring Diagram and Fig 3.0, 3 Contactor Auto Bypass Wiring Diagram

***IMPORTANT**. Use only copper wire with 167°F (75°C) minimum.*

PRE-OPERATION CHECK

Refer to Honeywell 3G SmartVFD manual Chapter 5 "COMMISSIONING" before applying power.

1. Make sure bypass panel and motor are properly grounded.
2. Make sure all connection points are tight, including all bypass panel connection points
3. Make sure all safeties (customer options) are connected and in working order.
4. Double check correct voltage is being applied and power and motor wiring are terminated in the correct place.
5. Verify motor FLA does not exceed VFD output amp rating and bypass contactor overload relay setting dial.
6. Set bypass contactor overload relay adjustment dial to motor FLA.
7. Verify building automation system is ready for start , stop, and speed command . Verify all wires are terminated in the correct location.
8. Make sure all personnel, debris, etc are clear.

UNINTENDED START

When the variable frequency drive is connected to AC line power, the motor may start at any time, causing the risk of death, serious injury, equipment, or property damage. The motor can start by means of an external switch, a serial bus command, an input reference signal from the LCP, or after a cleared fault condition.

OPERATION

Before applying power, make sure all personnel, debris , etc. are clear. Verify main input disconnect handle is in the "OFF" position; " Bypass/Off/Test/VFD" selector switch is in the "OFF" position.

1. Apply input power by turning disconnect handle to the "ON" position.
2. Check three phase voltage on line terminals: "L 1 ", "L 2", and "L3". Note Voltage . Confirm the voltage is balanced within 3%. If not correct voltage balance before proceeding.

NOTE: The following steps require the User to read and understand the use of the LCP. Refer to Honeywell 3G SmartVFD Installation and User Guide to program correct parameters using local keypad control pad.

OPERATION (CONTINUED)

3. Turn "Bypass/Off/Test/VFD" selector switch to " Test" position. Enter all appropriate parameters and all motor nameplate data. See Honeywell 3G SmartVFD Installation and User manual.

IMPORTANT
Switching the bypass panel to VFD may immediately turn the motor on.

4. Turn "Bypass/Off/Test/VFD" selector switch to "VFD" position. Press "Main Menu" button multiple times as necessary to return to main menu screen (look for " Main Menu" title in upper left of screen). Index the VFD for operation using the keypad. Check motor rotation. Note rotation. Turn "Bypass/Off/ Test/VFD" selector switch to "OFF" position. Wait for motor to stop

IMPORTANT
Switching the bypass panel to BYPASS will immediately turn the motor on.

5. Turn selector switch to " BYPASS" position. Check motor rotation. Note rotation. Turn "Bypass/Off/ VFD" selector switch to "OFF" position. Wait for motor to stop. Proceed forward based upon noted conditions and following choices:
   a. **VFD and BYPASS position both operate forward**. If both operate as intended in forward rotation, no power wiring changes are needed. Proceed with commissioning drive and setup as needed.
   b. **VFD and BYPASS position both operate backward**. If motor is rotating backwards in VFD mode and Bypass mode, shut down power, lock out power source, test incoming voltage on incoming line power wiring on line terminals "L1", "L2", "L3". Once it is established that power is shut down, swap incoming wires on terminals "L1" and "L2". Re - energize power and check rotation again . Once proper rotation is confirmed in both modes proceed with commissioning drive and setup as needed.

NOTE

Every bypass unit is tested in the factory. Unit is shipped with factory paper work indicating performed test routines with testing results. The following options labeled "c" and "d" should not normally be encountered in field conditions. However, instructions are given herein, so if the user encounters these conditions, a field change can be made allowing unit to operate normally. Please alert the factory if these conditions are encountered.

OPERATION continued on next page

OPERATION (CONTINUED)

c. **VFD operates backward, BYPASS operates forward**. (*If motor is rotating backward in VFD mode and forward in Bypass mode there may be an issue with the internal factory wiring*). Shut down power , lock out power source , test incoming voltage on incoming line power wiring on line terminals "L1", "L2", "L3". Once it is established that power is shut down , open the VFD cover and locate terminals "91"(L1) and "92"(L2) on the drive. Swap wires on terminals "91"(L1) and "92"(L2). *(Refer to Fig . 1.0 3 Contactor Wiring Diagram*). Re - energize power and check rotation again . Verify the motor rotation in VFD mode is forward . Once verified , switch to BYPASS mode and verify rotation in BYPASS mode is forward . Once proper rotation is confirmed in both modes proceed with commissioning drive and setup as needed . If problems persist call J&L factory staff for technical support.

d. **VFD operates forward , BYPASS operates backward** . *If motor is rotating forward in VFD mode and backward in Bypass mode there may be an issue with the internal factory wiring*). Shut down power , lock out power source , test incoming voltage on incoming line power wiring on line terminals "L1", "L2", "L3". Once it is established that power is shut down , locate the overload relay within the bypass enclosure . Find terminals "T1 " and "T2 " on the overload relay . Swap wires on terminals "T 1 " and "T 2 ". *(Refer to Fig . 1 .0 3 Contactor Wiring Diagram*). Re - energize power and check rotation again . Verify the motor rotation in VFD mode is forward . Once verified , switch to BYPASS mode and verify rotation in BYPASS mode is forward . Once proper rotation is confirmed in both modes proceed with commissioning drive and setup as needed . If problems persist call J&L factory staff for technical support.

Modes of Operation

Bypass panel "Bypass/Off/Test/VFD" selector switch has four operating positions:

1. ***BYPASS*** : Device directs power to motor only. No power reaches the VFD. The motor operates at full speed with full power.
2. ***OFF***: Device stops power. Power reaches neither the motor nor the VFD.
3. ***TEST*** : Device directs power to VFD only. This allows for VFD calibration, adjustments, and diagnostics.
4. ***VFD***: Device directs power to VFD first, then to the motor. VFD controls the motor as it would without the bypass panel

Auto Bypass Equipped Models

An Auto-Bypass model number will end with HVFD 3...Gxx**3**B or HVFD3....Gxx**4**B. The digit before the last Digit will be "3" or "4".

1. With Auto Bypass, panel will automatically switch motor over to bypass starter if VFD faults.
2. VFD is pre-programmed at bypass manufacturing facility for "Auto Bypass" operation. This feature includes several options:

   a. ***REMOTE BYPASS ENABLE***: Bypass mode can be selected remotely via contact closure on bypass panel TB terminals 6 & 7.

   b. ***REMOTE BYPASS STATUS***: Bypass contactor status can be monitored via TB terminals 9 & 10 using a hardwired contact closure. **NOTE: this function is not available if the Bypass Contactor Status via BACnet option is chosen.**

   c. **DISABLE *AUTO BYPASS CONTROL***: (Field modification if needed). Jumper J2 on bypass panel terminals 4 & 5 must remain in place for auto bypass operation. Removing jumper J2 sets bypass panel to: "Manual Bypass" – will not automatically switch to bypass upon a VFD fault. Bypass would need to be selected by turning " Bypass/Off/Test/VFD" selector switch to "Bypass " position

IMPORTANT:

If you have had a need to perform a factory reset of Smart VFD HVAC parameters, then you also need to reprogram the **VFD Relay 1 Output** *to allow Auto-Bypass function to operate. Refer to Honeywell 3G SmartVFD Installation and User Guide for instructions on programming VFD.*

Bypass Contactor Status Operation via BACnet Option

(Testing of bypass contactor status is only required if this option if selected when ordered and factory installed)

With Switch in BYPASS position:

1. Refer to Honeywell 3G SmartVFD Installation and User Guide . Navigate to the screen displaying the status of Digital Input (terminal 19) and verify the status of the input reads "true ". If value does not read "true " verify the VFD has been programmed for this operation.

Bypass Contactor Status Operation vis BACnet continued on next page

Bypass Contactor Status Operation via BACnet Option (CONTINUED)

Rotate the Switch to VFD position:

2. Refer to Honeywell 3G SmartVFD Installation and User Guide. Navigate to the screen displaying the status of Digital Input (terminal 19) and verify the status of the input reads "false". If value does not read "false" verify the VFD has been programmed for this operation.

3. The user should now be able to read the bypass contactor status via the BACnet communications bus.

***IMPORTANT*:**

If you have had a need to perform a factory reset of Smart VFD HVAC parameters, then you also need to reprogram the **VFD Digital Input 19** *to allow BACnet Contactor Status monitor operation. Refer to Honeywell3G SmartVFD Installation and User Guide for instructions on programming VFD.*

Enclosure Heater

1. When ordered, a factory installed heater will maintain conditions within the enclosure to help maintain humidity and acceptable operating conditions for VFD. The heater contains a built-in thermostat which can be adjusted if needed. Under normal conditions adjustment is not needed.

Enclosure Exhaust Fan(s)

1. When ordered, a factory installed exhaust fan will provide ventilation within the enclosure to help maintain acceptable operating conditions for VFD. The enclosure contains a thermostat which can be adjusted if needed. Under normal conditions adjustment is not needed.

Soft Start Equipped

A Soft Start model number will end with HVFD2...Gxx**2**B or HVFD3....Gxx**4**B. The digit before the last Digit will be "2" or "4".

1. ***SOFT START IN BYPASS CONTROL***: When ordered, a factory installed soft starter will replace the bypass contactor. When the assembly is switched to BYPASS (either manually or automatically), the soft start will ramp the motor up to full speed over a time period.

   a. Test the bypass operation by turning " Bypass/ Off / Test/VFD" selector switch to "Bypass" position. Motor should slowly ramp up to full speed.
   b. To test the ramp down function, turn the " Bypass/ Off/Test/VFD" selector switch to "Off position. Motor should slowly ramp down to a full stop.

2. User may adjust settings on the soft start for the ramp up, ramp down, and initial voltage settings. Refer to the manufacturers operating guide included in the literature package when this option is selected. Refer to diagram below for factory settings.

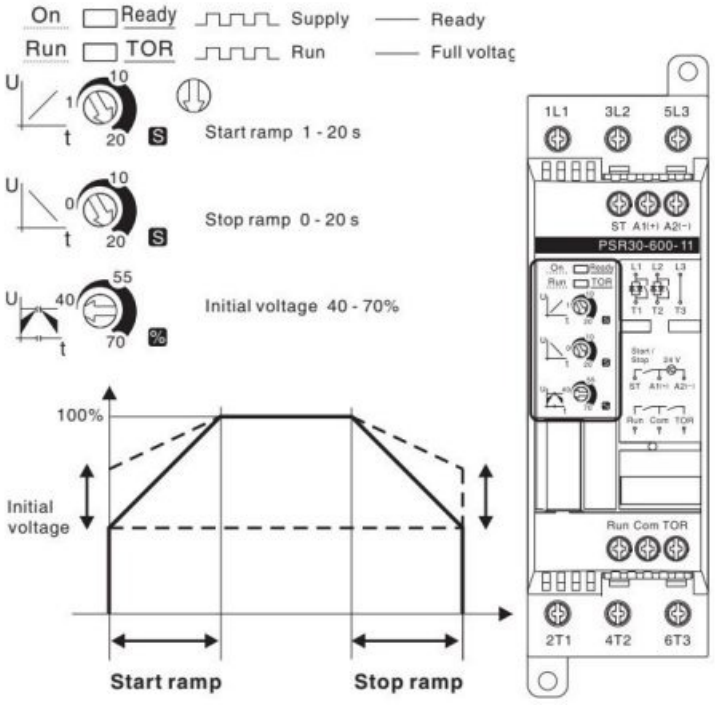

Fig. 1.0 Soft Start Factory Settings Diagram

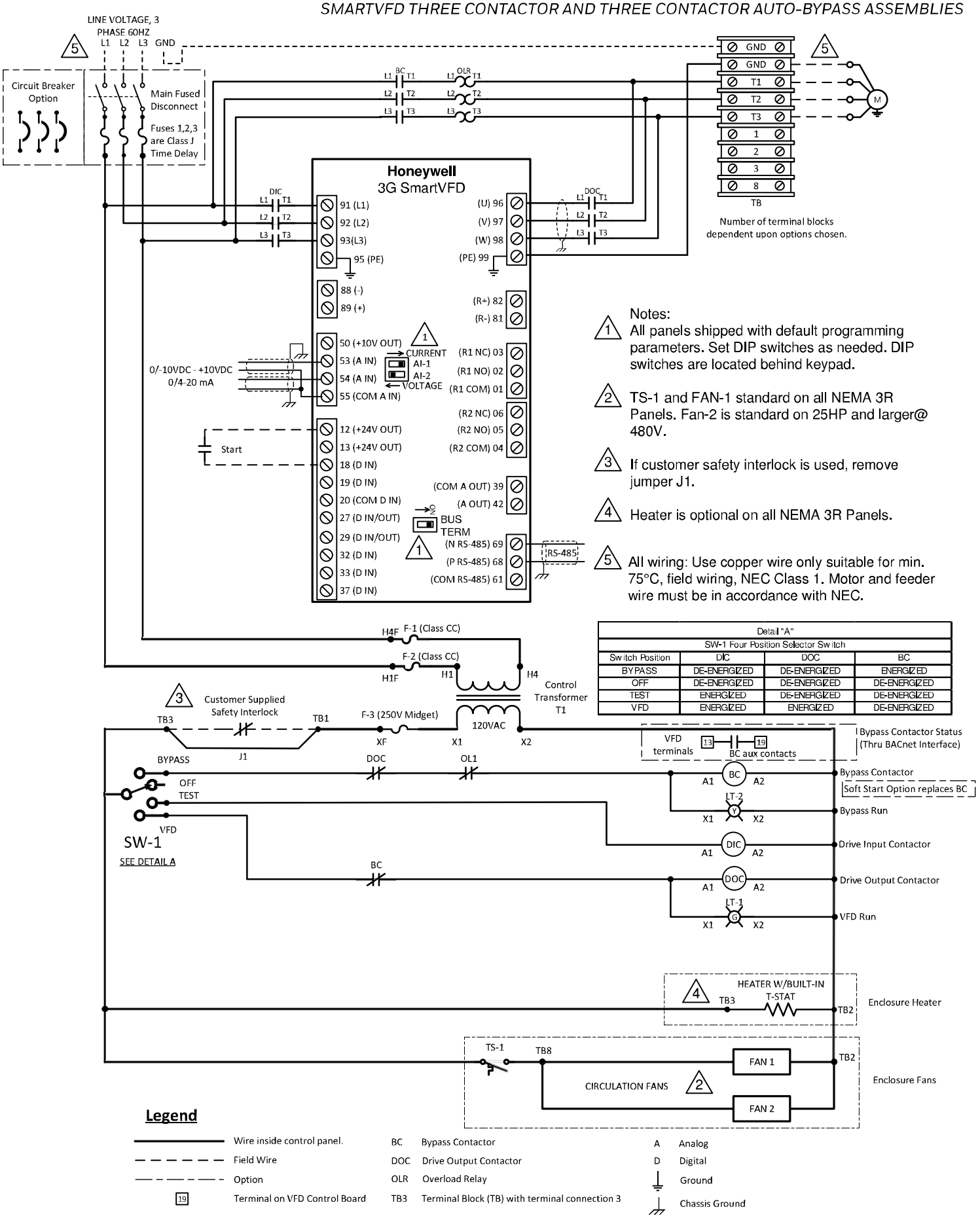

Detail "A"
SW-1 Four Position Selector Switch

Switch Position	DIC	DOC	BC
BYPASS	DE-ENERGIZED	DE-ENERGIZED	ENERGIZED
OFF	DE-ENERGIZED	DE-ENERGIZED	DE-ENERGIZED
TEST	ENERGIZED	DE-ENERGIZED	DE-ENERGIZED
VFD	ENERGIZED	ENERGIZED	DE-ENERGIZED

Fig. 2.0 3 Contactor Wiring Diagram

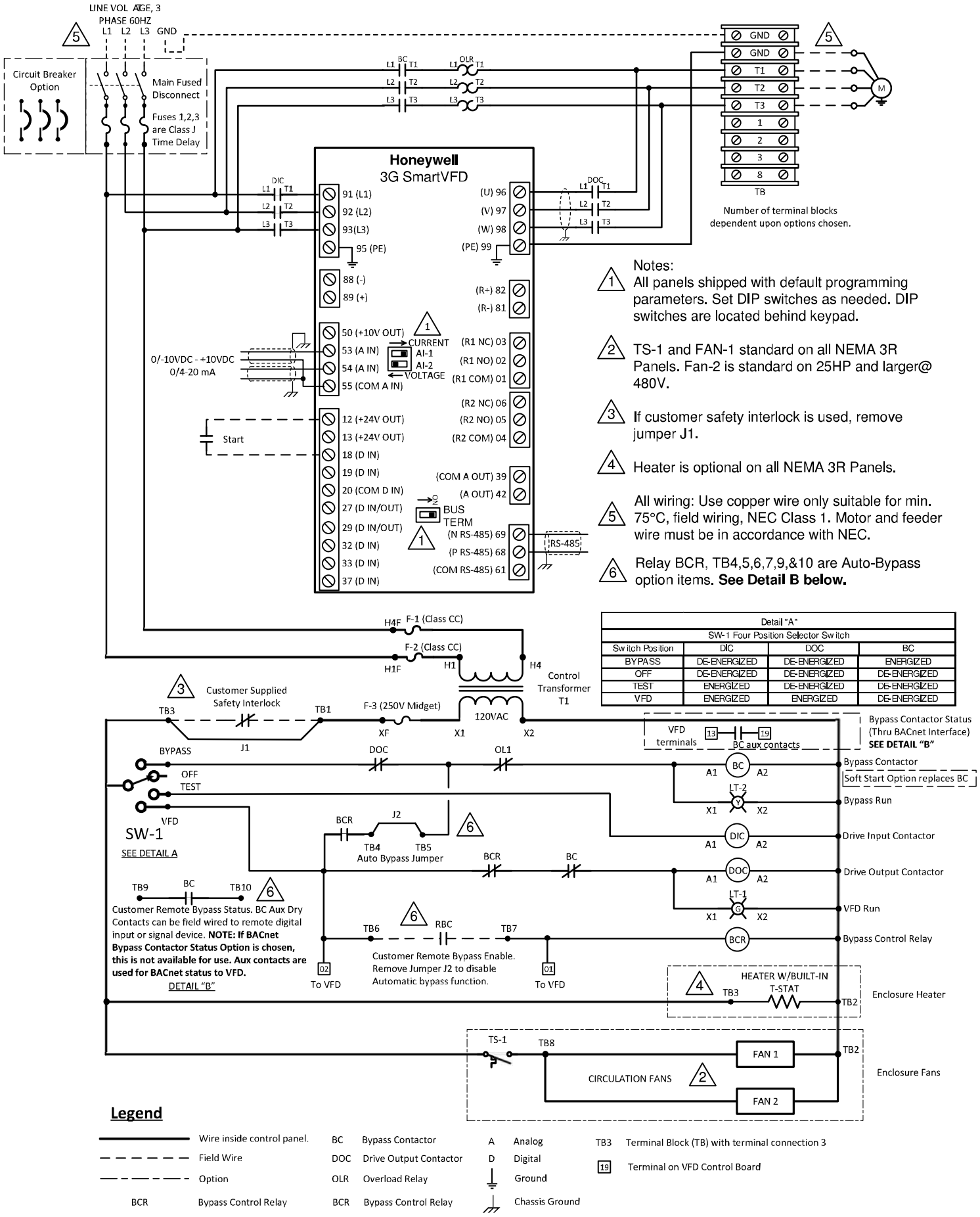

Detail "A" SW-1 Four Position Selector Switch			
Switch Position	DIC	DOC	BC
BYPASS	DE-ENERGIZED	DE-ENERGIZED	ENERGIZED
OFF	DE-ENERGIZED	DE-ENERGIZED	DE-ENERGIZED
TEST	ENERGIZED	DE-ENERGIZED	DE-ENERGIZED
VFD	ENERGIZED	ENERGIZED	DE-ENERGIZED

Legend

Wire inside control panel.	BC	Bypass Contactor	A	Analog	TB3 Terminal Block (TB) with terminal connection 3
Field Wire	DOC	Drive Output Contactor	D	Digital	19 Terminal on VFD Control Board
Option	OLR	Overload Relay		Ground	
BCR Bypass Control Relay	BCR	Bypass Control Relay		Chassis Ground	

Fig. 3.0 3 Contactor Auto-Bypass Wiring Diagram

PRODUCT NOMENCLATURE

HVFD3D 3 C 0100 G 1 0 0 B

Product Family	Note 1
HVFD3D	**Honeywell 3G SmartVFD**
HVFD3B	**Honeywell 3G SmartVFD BYPASS**
HVFDSD	Honeywell SmartVFD HVAC
HVFDSB	Honeywell SmartVFD BYPASS

Input Phase	
3	Three Phase

Nominal Voltage	Note 2
A	208/230
C	460
D	600 Vac

Nominal Horsepower	Note 3
0015	1.5 HP
0020	2 HP
0030	3 HP
0050	5 HP
0075	7.5 HP
0100	10 HP
0150	15 HP
0200	20 HP
0250	25 HP
0300	30 HP
0400	40 HP
0500	50 HP
0600	60 HP
0750	75 HP
1000	100 HP
1250	125 HP
1500	150 HP
2000	200 HP
2500	250 HP

Application	Note 4
B	Denotes Model number for Bypass Assembly with VFD
C	Denotes Drive only, new 3G version

Options	
0	No Special Options
1	Manual Bypass
2	Manual Bypass with Soft Start Option
3	Auto Bypass Option
4	Auto Bypass and Soft Start Option

Contactors	Note 5
0	Drive Only
1	Fused Disconnect Only
2	Two Contactor Bypass with Fused Disconnect
3	Three Contactor Bypass with Fused Disconnect
4	Circuit Breaker Disconnect Only
5	Two Contactor Bypass w/ Circuit Breaker Disconnect
6	Three Contactor Bypass w/ Circuit Breaker Disconnect

Enclosure Type	
1	NEMA 1
2	NEMA 12
3	NEMA 3R
4	NEMA 3R with Heater

Interface	
G	Graphical Keypad

NOTES

1. HVFDSD/HVFDSB denote 2G drives no longer manufactured. Shown for reference only.
2. 600 Vac Drives with bypasses are Special Order. Call for assistance and Pricing.
3. 1.5HP – 150HP are included in price list. Call for special quote on 200HP and above.
4. Model numbers for Bypass application end in "B". VFD only will end in "C". If "Contactors" choice is "0" and "Options" choice is "0" then "Application" must be "C".
5. If "Contactors" choice is 0 (Drive only), 1 (Fused Disconnect), or 4 (Circuit Breaker Disconnect) then "Options" choice must be "0". If "Contactors" choice is 2 or 5 (2 Contactor bypass) then "Options" choice must be "1". 2-Contactor bypass is available as manual bypass only.

APPLICABLE TECHNICAL LITERATURE

TABLE	REFERENCE
Honeywell 3G SmartVFD Installation and User Guide	31-00559-01

ACCESSORIES

TABLE	PART NUMBER
Honeywell 3G SmartVFD Lon Card	HVFD3DOPTLON
Honeywell 3G SmartVFD Graphic Keypad	HVFD3DKEYPAD
Honeywell 3G SmartVFD Real Time Clock Card	HVFD3DOPTRTC
Honeywell 3G SmartVFD Ethernet IP Card	HVFD3DOPTETHIP
Honeywell 3G SmartVFD BACnet IP Card	HVFD3DOPTBACIP
Honeywell 3G SmartVFD Modbus TC/IP Card	HVFD3DOPTMODIP
Honeywell 3G SmartVFD Mounting Kit for Keypad on Door	HVFD3DDOORMOUNT
Honeywell 3G SmartVFD 3 meter Cable for Door Kit	HVFD3DREMOTE3M

This product is manufactured by J&L Manufacturing Inc. By using this J&L Manufacturing, Inc. literature, you agree that J&L Manufacturing, Inc. will have no liability for any damages arising out of your use or modification to, the literature. You will defend and indemnify J&L Manufacturing, Inc., its affiliates and subsidiaries, from and against any liability, cost, or damages, including attorneys' fees, arising out of, or resulting from, any modification to the literature by you.

J&L Manufacturing, Inc.
PO Box 678 Fuquay Varina, NC
27526
www.HoneywellSmartVFD.com

The Honeywell Trademark is used under license from Honeywell International Inc. Honeywell International Inc. makes no representations or warranties with respect to this product.

62-2032-05 Rev. 03-2023
Printed in United States

Honeywell