A-4000 Series Oil Removal and Pressure-Reducing Stations and Air Compressor Accessories

Installation Instructions

Part No. 64-257-14, Rev. C
Issued September 27, 2013
Supersedes September, 2007

Applications

The A-4000 Series Oil Removal and Pressure-Reducing Stations (see Figure 1, Figure 2, Figure 3, and Figure 4) are available in single or dual PRV models in 10 or 20 scfm (4.7 or 9.4 l/s) maximum flow capacities. In addition, each unit features a four-way bypass valve, coalescing and activated charcoal oil removing filters, and is completely piped with copper tubing, which reduces friction, allows higher flow rates, and meets fire codes in mechanical equipment rooms. The filter combination removes oil aerosols and vapors to provide clean, oil-free air for pneumatic control systems. All models provide maximum performance for a period of 1 year, at which time the coalescing and activated charcoal filter elements need to be replaced. Gauges are provided to monitor system operations and performance. All models can provide filtered, high-pressure air to remote PRV stations. All models have a maximum input pressure rating of 150 psig (1,050 kPa) and an upper temperature limit of 125°F (52°C).



Figure 1: A-4000-139, 10 scfm, Single PRV Station (Shown with Optional Oil Reservoir)

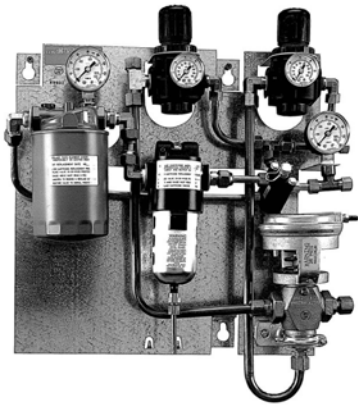

Figure 2: A-4000-140, 10 scfm, Dual PRV Station



Figure 3: A-4000-141, 20 scfm, Single PRV Station



Figure 4: A-4000-142, 20 scfm, Dual PRV Station (Shown with Optional Oil Reservoir)

Johnson Controls

Single PRV models are factory-set for approximately 20 psig (140 kPa), and dual PRV models are factory-set for approximately 15 and 20 psig (105 and 140 kPa). Dual 10 scfm units have a maximum of 1 psi (7 kPa) pressure drop with a 10 scfm flow from the PRVs through the three-way air valve; dual 20 scfm units have a maximum of 2 psi (14 kPa) pressure drop. The three-way air valve is equipped with a 1/2 in. O.D. compression fitting to furnish the dual supply air to the system. A 1/2 in. connection is furnished to provide a constant 20 psig (140 kPa) supply to local control panels, and a 3/8 in. connection is furnished to provide filtered high-pressure air to remote PRV stations.

Note: All A-4000 Series Oil Removal and Pressure-Reducing Stations are shipped from the factory with the activated charcoal filter packaged separately in the carton. The filter must be reinstalled by screwing it onto the threaded pipe of the filter head. Tighten the filter to the point where the white label faces the front of the unit.

IMPORTANT: System air flow consumption must not increase beyond the maximum flow listed. Overconsumption forces oil through the coalescing filter, saturating the activated charcoal filter before its required replacement time.

Table 1: Models

Flow Consumption	Compressor Horsepower (50% Running Time)	PRVs	Code Number
Up to a Maximum of 10 scfm (4.7 l/s)	Johnson Controls® 7-1/2 hp and Under	Single	**A-4000-139**
		Dual	**A-4000-140**
10 to 20 scfm Maximum (4.7 to 9.4 l/s)	Other Manufacturers 7-1/2 hp and Over	Single	**A-4000-141**
		Dual	**A-4000-142**

Table 2: Repair Parts

Description		Code Number
Charcoal Filter Elements	10 scfm (4.7 l/s)	**A-4000-632**
	20 scfm (9.4 l/s)	**A-4000-633**
Coalescing Filter Elements	10 scfm (4.7 l/s)	**A-4110-604**
	20 scfm (9.4 l/s)	**A-4000-604**
3/8 in. Pressure Regulator with Bracket, Gage, and Safety Relief Valve		**A-4000-138**
Four-Way Bypass Valve with 3/8 in. Compression Fittings		**A-4110-601**

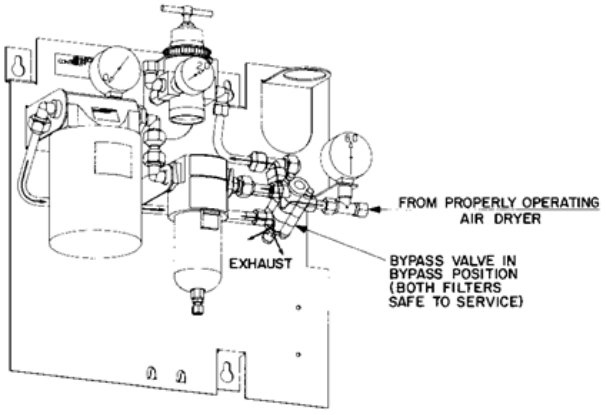

Figure 5: Flow Path with Bypass Valve in Bypass Position (Applies to all Models)

Dimensions

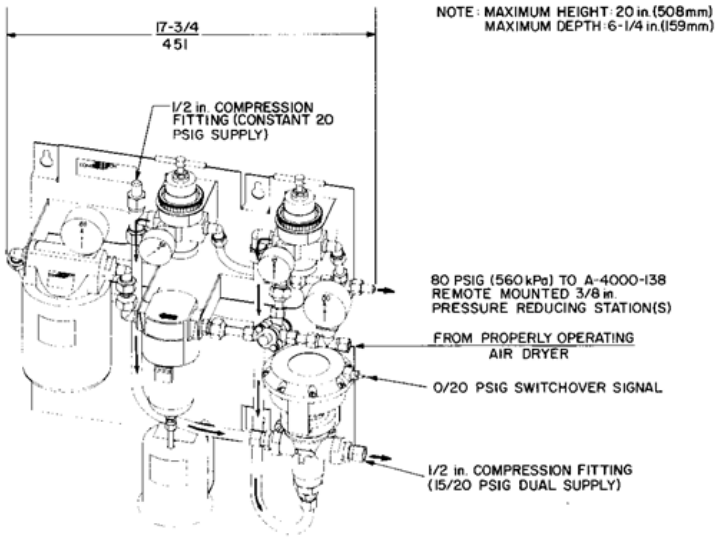

Figure 6: Flow Path through Three-Way Air Valve on Dual Oil Removal and Pressure-Reducing Stations (Shown with Optional Oil Reservoir) Dimensions, in./mm

Remote-Mounted 3/8 in. Pressure-Reducing Station

The A-4000-138 Remote-Mounted 3/8 in. Pressure-Reducing Station (see Figure 7) comes completely assembled with a wall mounting bracket, 0 to 30 psig gauge, safety relief valve, and 3/8 in. O.D. compression elbow fittings on the high- and low-pressure sides. The desired output pressure can be easily adjusted between 0 and 30 psig using the black knob. The factory-set safety relief valve relieves overpressures exceeding 25 psig (175 kPa). Pressure adjustments up to 50 psig (350 kPa) can be made; however, the 0 to 30 psig gauge must be replaced with one having a higher scale, and the safety relief valve must be readjusted to the required higher value. Designed to handle input pressures up to 300 psig (2,100 kPa) at air flows exceeding 20 scfm (9.4 l/s), this pressure-reducing station regulates an output pressure within a 0.2 psi (1.4 kPa) variation with a 20 psi (140 kPa) variation in input pressure.

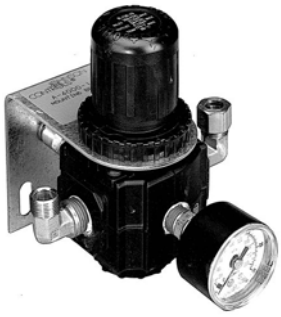

Figure 7: A-4000-138 Remote-Mounted 3/8 in. Pressure-Reducing Station

Dimensions

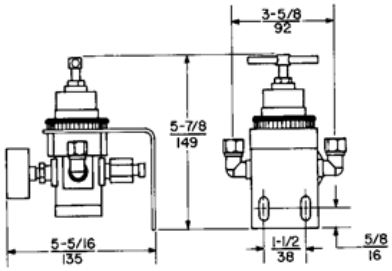

Figure 8: A-4000-138 Dimensions, in./mm

Table 3: Repair Parts

Description	Code Number
1/4 in. NPT, 25 psig Safety Relief Valve (Not ASME Coded)	**A-4000-144**
Replacement Bracket	**A-4000-143**

Dimensions

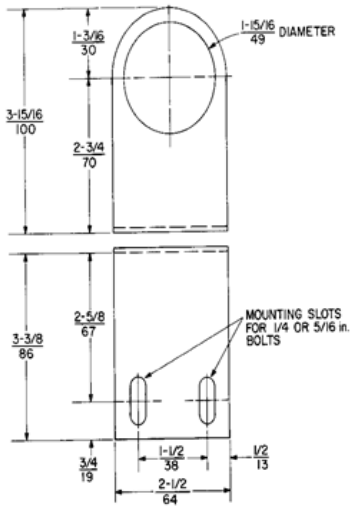

Figure 9: A-4000-143 Mounting Bracket Dimensions, in./mm

Oil Reservoir

The A-4000-145 Oil Reservoir (see Figure 10) provides a means of identifying excess oil pumping (compressor maintenance) as well as water entrainment (air dryer maintenance). If either occurs, replacement of the oil removal elements is required. The oil reservoir also provides a means of collecting the coalesced oil for proper disposal.



Figure 10: A-4000-145 Oil Reservoir and Bracket Assembly

Oil Removal Filters

The combination of coalescing and activated charcoal filters (see Figure 11) in series removes both oil aerosols and vapors to provide clean, oil-free air for pneumatic control systems. These filters have a maximum input pressure rating of 150 psig (1,050 kPa) and an upper temperature limit of 125°F (52°C).

Note: The air supply to this filter combination must be from a properly broken-in air compressor producing less than 6 ppm aerosol oil (as measured by a Johnson Controls A-4000-120 Oil Indicator on the compressor tank outlet) and must also pass through a properly operating air dryer.



Coalescing Filter



Charcoal Filter

Figure 11: Oil Removal Filters

Table 4: Models

Description		Efficiency Rating	Code Number
Coalescing	10 scfm (4.7 l/s)	99.999+% Efficient for Particles 0.025 microns in Size and Larger	**A-4000-1048**
	20 scfm (9.4 l/s)		**A-4000-1049**
	40 scfm (18.9 l/s)		**A-4000-6001**
Carbon	10 scfm (4.7 l/s)	100% Efficient for Particles as Small as 0.025 microns in Size	**A-4000-147**
	20 scfm (9.4 l/s)		**A-4000-146**

Table 5: Repair Parts

Description		Code Number
Coalescing Filter Elements	10 scfm (4.7 l/s)	**A-4110-604**
	20 scfm (9.4 l/s)	**A-4000-604**
	40 scfm (18.9 l/s)	**A-4000-605**
Charcoal Filter Elements	10 scfm (4.7 l/s)	**A-4000-632**
	20 scfm (9.4 l/s)	**A-4000-633**
Filter Auto-Drain Kit (All Coalescing Filters)		**A-4000-6010**

Servicing Procedure for Coalescing Filters

All coalescing filters are equipped with an automatic drain from which accumulations of entrapped liquids are automatically blown out. The filter element should be replaced when the leaving air pressure gauge (mounted on the PRV station charcoal filter head) indicates less than 50 psig (350 kPa) the differential pressure between the leaving and input gauges is 15 psi (105 kPa) or more, or after one year of service—whichever occurs first.



A-4110-604 (10 scfm) **A-4000-604 (20 scfm)** **A-4000-605 (40 scfm)**

Figure 12: Coalescing Filter Elements



A-4000-633 (20 scfm) **A-4000-632 (10 scfm)**

Figure 13: Charcoal Filter Elements

To replace the filter element, see Figure 14 and proceed as follows:

1. Turn the air supply OFF.
2. Depress the lever on the filter bowl clamp and turn 1/8 of a revolution. Drop the clamp, bowl guard, and bowl to expose the filter element which needs to be replaced.
3. Remove the old filter element by turning it counterclockwise.
4. Clean the small screen around the drain seat of the automatic drain seat of the automatic drain valve by turning the filter bowl upside down and tapping it lightly on a table top.
5. Clean the bowl and drain valve assembly using household detergent or any solvent that is not harmful to polycarbonate.
6. Install the new filter element and bowl O-ring, then reinstall the bowl and guard.

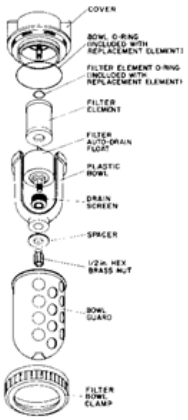

Figure 14: Coalescing Filter Disassembly

Servicing Procedure for Activated Charcoal Filter

Refer to the white service label on the activated charcoal filter element for proper replacement procedure.

Note: After the activated charcoal filter element has been replaced, apply the white service label included and record the next replacement date (month and year).

A-4000-6010 Filter Auto-Drain Replacement

Release the pressure in the system and remove the bowl guard and the plastic bowl. Insert a 7/64 in. Allen wrench up through the bottom of the external 1/2 in. hex brass nut to prevent the float assembly from turning when loosening the 1/2 in. hex brass nut to remove the old auto-drain assembly.

Install the replacement auto-drain assembly. Turn the hex brass nut finger-tight while restraining the float assembly from turning by holding it with the 7/64 in. Allen wrench.

IMPORTANT: Do not hold onto the float assembly while tightening the 1/2 in. hex nut. Holding onto the float assembly may cause the float arm to twist and result in malfunction of the auto-drain.



Figure 15: A-4000-6010 Filter Auto-Drain Assembly

Wall Bracket for Small, Horizontal, Single Compressors and Tanks

Rugged 1/8 in. A-4000-108 Angle Iron Brackets (see Figure 16) may be used to mount a compressor on a wall where floor space is limited. These brackets may be used for single compressors with up to 30-gallon tanks.

Dimensions

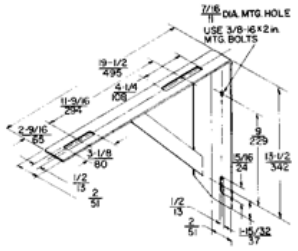

Figure 16: A-4000-108 Wall Bracket (1/8 in. Plate Metal) Dimensions, in./mm

Floor Legs for Horizontal Tanks

A-4000-109 Floor Legs (made from U-channel, see Figure 17) for mounting horizontal tanks 12 in. off the floor are available to meet building requirements and facilitate cleaning under the compressor.

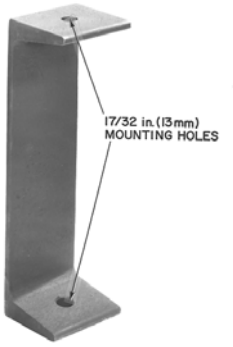

Figure 17: A-4000-109 Floor Leg

Intake Air Filter

The dry-type intake air filters (see Figure 18) are rated 99% efficient at a 10 micron rating, regardless of air demands or temperature variations. A steel housing with baked enamel finish makes these filters suitable for either outside or inside locations.



Figure 18: Intake Air Filters

Dimensions

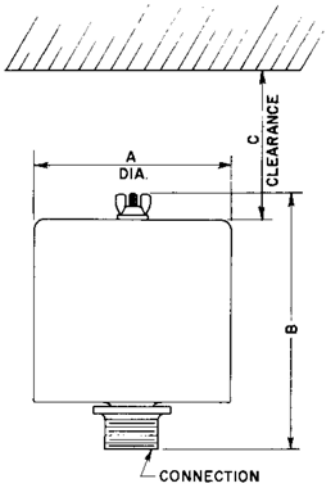

Figure 19: Dimensions, in./mm (See Table 6)

Table 6: Dimensions

Code Number	Capacity	Connection	Dimensions, in. (mm)		
			A	B	C
A-4000-612	15 scfm (7.1 l/s)	3/4 in. NPT	6 (152)	4 (102)	4-1/4 (108)
A-4000-613	30 scfm (14.2 l/s)	1-1/4 in. NPT	6 (152)	6-3/4 (172)	7 (178)
A-4000-635	5 scfm (2.4 l/s)	1/2 in. NPT	2-1/2 (64)	3 (76)	2-7/8 (73)

Table 7: Replacement Filter for A-4000-115

Code Number	Description
F-1000-232	Replacement filter for the discontinued A-4000-115, 5 scfm (2.4 l/s), 1/2 in. NPT connection

Building Efficiency
507 E. Michigan Street, Milwaukee, WI 53202

Metasys® and Johnson Controls® are registered trademarks of Johnson Controls, Inc.
All other marks herein are the marks of their respective owners. © 2013 Johnson Controls, Inc.