A11 Series Low Temperature Cutout Control Installation Guide

997-358 Rev. J

2021-08-20

Applications

A11 Series low temperature cutout controls are available with single-pole, single-throw (SPST) or single-pole, double-throw (SPDT) contact action. Applications include the sensing of low temperature conditions to avoid overcooling or icing of hydronic coils, cooling coils, and liquid handling pipes. The controls are compact and sturdy, and have an adjustable temperature setpoint range with a fixed differential. You can access the range adjustment screw at the bottom of the control, or at the top of the control when you remove the cover.

Important: All A11 Series coil temperature controls are designed for use only as operating controls. Where an operating control failure would result in personal injury and/or loss of property, it is the responsibility of the installer to add devices (safety, limit controls) or systems (alarm, supervisory systems) that protect against, or warn of, control failure.

Required tools

Use the following tools to install the control:

- 1/2 in. (1.3 cm) electrical metallic tubing (EMT) bender
- Hole saw
- Tin snips or hack saw
- Vise
- Brackets
- 4 in. (10.1 cm) electrical box covers with a center hole knockout, or T-752-1001 1/2 in. (1.3 cm) duct flanges
- Nylon tie wraps with holes
- 1/2 in. (1.3 cm) EMT connectors
- 1/4 in. (6.4 mm) poly tubing
- Copper tubing
- EMT or Unistrut
- Conduit hangers or Minerallac straps
- Self-tapping sheet metal screws
- Machine screws and nuts
- A11 Low Temperature Cutout Control
- Element mounting bracket

Mounting

Before you begin:

Do not install A11 controls where the ambient temperature at the control exceeds 140°F (60°C), or falls below 0°F (-18°C). Make sure that the maximum temperature at the sensing bulb does not exceed 250°F (121°C).

1. Locate the sensing element on the downstream side of the coil. Expose the element to all areas where low temperatures may occur.
2. Horizontally serpentine the 20 ft (6.1 m) long sensing element across the face of the coil to sense temperatures in all areas.

   Ensure that the horizontal pitch of the coil does not exceed 5° (one in. per ft) for the areas that you want to protect. See Figure 1.

Mounting considerations

The primary purpose of a low limit cutout is to prevent a coil from freezing. Before you mount the control, consider the following factors:

- It is vital that you protect the lower 6 in. (15.20 cm) of the coil, because cool air drops to the bottom of the coil.
- If the tubes in the coil freeze, the coil can crack and leak. As water leaks from the coil, the control system may sense the reduced water pressure and increase the flow of water to compensate for the loss, which causes even more damage.
- It is important to follow all instructions to install low limit controls because the low limit controls incorporate a vapor-charged sensing element. The vapor in the element creates a change in pressure with a change in temperature within the sensing element, eventually causing the electrical switch in the device to open or close.
- The size of the duct work or air handling unit system in which you install the device may require more than one low limit control to adequately protect the entire coil.
- System accessibility affects how you mount the device. Larger Air Handling Units (AHUs) often provide access to the coil, providing you space to effectively serpentine the capillary across its face. (See Mounting in an accessible location.) Smaller AHUs or duct work may not provide direct accessibility, which means you need to pre-assemble the control before installation. (See Mounting in an inaccessible location.)
- Mount the sensing element with a slight decline of approximately 1 in. (25 mm) for every 1 ft (305 mm) of drop, as illustrated in Figure 1 and listed in Table 1.

Figure 1: Mounting sensing element inside coil

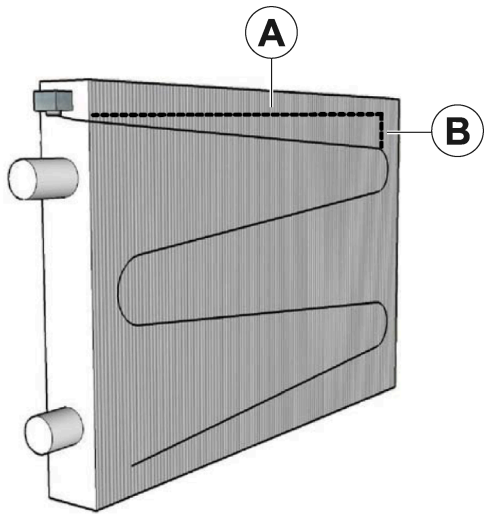

Note: Allow for 1 in. (25 mm) of drop per 1 ft (305 mm) of run.

Table 1: Maximum drop by unit width

Unit width, ft (m)	Maximum drop per segment, in. (mm)
Callout A	**Callout B**
5 (1.5)	5.25 (133)
10 (3.0)	10.50 (267)
15 (4.6)	15.75 (400)
20 (6.1)	21.00 (533)
25 (7.6)	26.25 (667)
30 (9.1)	31.50 (800)

Alternate installations

Alternate installations are shown in Figure 2 and Figure 3. If you select these installation methods, mount the temperature control above the sensing element whenever possible. If you cannot mount the control above the element, loop the capillary or element slightly below the control, then route the element toward the top of the coil, and begin serpentining in a downward direction from the top of the coil.

Keep the loop as short as possible, maximum of 4 ft (1.2 m). If you mount the control below the sensing element, prevent possible nuisance alarms by mounting the control in a conditioned space. When using the A11 Series control, coil the excess capillary inside the conditioned space and secure. The excess capillary is the small capillary between the control and sensing element.

Figure 2: Mounting options - inside the duct

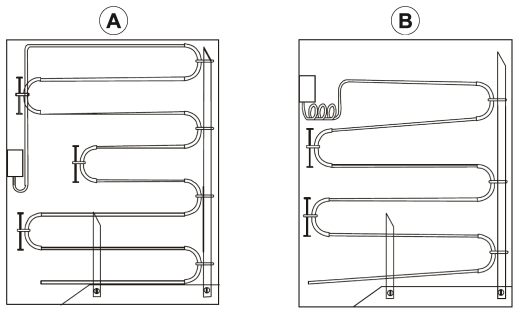

Figure 3: Mounting options - outside the duct

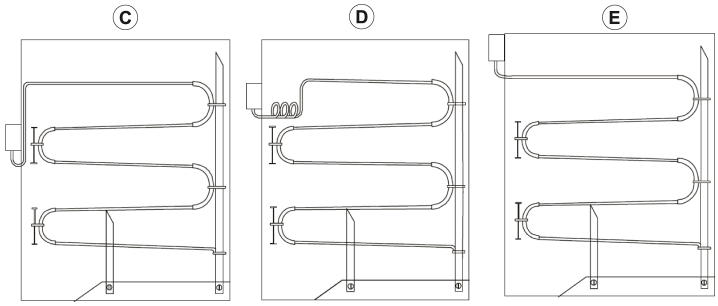

Table 2: Mounting options

Callout	Description
A	Control mounted inside duct, duct surrounded by unconditioned space
B	Control mounted inside duct, space surrounding duct is unconditioned
C	Ductwork installed inside conditioned space only
D	Ductwork installed in heated space only
E	Ductwork inside heated or unheated space

Mounting guidelines

CAUTION

Risk of Environmental and Property Damage

Avoid sharp bends in capillary tubes. Sharp bends can weaken or kink capillary tubes, which may result in refrigerant leaks or restrictions of flow.

CAUTION

Risk of Environmental and Property Damage

Coil and secure excess capillary tubing away from contact with sharp or abrasive objects or surfaces. Vibration and sharp or abrasive objects in contact with capillary tubes can cause damage that may result in release of the chemical charge in the sensing element, which may result in damage to the environment or property.

CAUTION

Risk of Property Damage

Do not dent or deform the sensing bulb. Dents or deformations in the sensing bulb can change the calibration, may cause the control to operate at temperatures other than the setpoint, and may result in other property damage.

Important:

- When you drill holes or drive screws to mount the sensing elements, be careful not to puncture or damage hydronic coils.
- Use only the mounting screws supplied with the Universal Mounting Bracket to avoid damage to the internal components. Be careful not to distort or bend the control case when you mount the control to an uneven surface. The use of other screws or bending the control case voids the warranty.
- Locate the control case and bellows where the ambient temperature is always warmer than the setpoint. The control operates only from the lowest temperature along any 14 in. to 16 in. (356 mm to 406 mm) length of the sensing element.
- Locate low temperature cutout controls in areas protected from the effects of weather. If you mount the control in an area that is exposed to the weather or other wet environments, equip it with an outdoor enclosure.
- It is important to mount the low temperature cutout control in the correct location. Expose the capillary to all areas on the coil where a risk of low temperatures is present.

Observe the following guidelines when you mount A11 Series low temperature cutout controls.

- Mount the control upright in an accessible location, where the control body, capillary tube, and sensing bulb are not subject to damage, and the control is in the highest possible position of the entire installation.
- Mount the control upstream from mixed air or chilled water coils.
- Mount the control downstream from preheat coils.
- Mount the control upright on flat, vertical, or horizontal surfaces using accessory brackets. These controls have NEMA 1 enclosures.
- Mount the capillary in a serpentine fashion so that it slopes gently downhill at an angle not greater than 5°. Do not permit any dips, bends, or kinks in the capillary, and install the last segment within 6 in. (152.4 mm) of the bottom of the coil.

Figure 4: Control capillary orientation

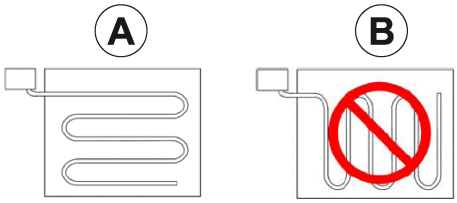

Table 3: Control capillary orientation

Callout	Description
A	Correct. Orient the capilliary horizontally.
B	Incorrect. Do not orient the capilliary vertically.

Mounting in an accessible location

Before you begin:

Sometimes, the coil face offers nothing that can hold the tie-wrapped sensing element. In these cases, use 1/2 in. (13 mm) EMT, hard copper tubing, or Unistrut to build supports to fasten the sensing element. Fasten the sensing element to fixed supports to hold the element in place and prevent movement in the air stream. Field-fabricated supports often take the form of a rack with vertical supports. To determine the proper location, see Figure 1.

1. Determine the best mounting location for the low temperature cutout control. Locate the control as high as possible on the side of the duct or on a nearby wall, panel, or structural support. The optimum mounting position is with the element bellows pointing down.
2. When you mount the control directly to a flat vertical surface, insert two screws or bolts through the two outer holes on the back of the control case.
3. When you mount the control to a flat horizontal surface, use the two inner holes with the mounting bracket and the supplied screws.
4. Build and install any field-fabricated supports that are necessary to hold the sensing element in place.
5. Use the control's mounting bracket as a template to mark the location for the mounting screws.
6. Drill an 5/16 in. (8 mm) entry hole for the sensing element.
7. Feed the entire length of the sensing element through the entry hole.

Important: On A11 low temperature cutout controls, the brass tubing just below the bellows is not temperature sensitive and can be mounted in the ambient space temperature. The copper sensing element begins below the solder bead. This part is temperature-sensitive, and you must properly position it to work correctly.

8. Use the mounting bracket and self-tapping screws, to fasten the control to the side of the duct.
9. Start at the bottom of the coil and secure the far end of the sensing element.
10. Secure the sensing element with 1/4 in. (6.4 mm) poly sleeve and tie wraps.
11. Position and mount the sensing element within 6 in. (152 mm) of the bottom of the coil.
12. Work your way back up to the bellows, stringing the sensing element in a serpentine fashion horizontally across the face of the coil, as shown in Figure 4.
13. Successive horizontal runs of the sensing element should be inclined slightly upward.
14. Make sure that horizontal runs of the sensing element are no more than 12 in. (305 mm) away from each other.

    Note: On a wide coil, you could be left with a very small S to get back up to the control. Locate this topmost bend in the correct position to use up any remaining slack in the length of the sensing element. You may need to build a support for the bracket at that turning point.

15. To prevent damage caused by vibration or abrasion, place a short piece of 1/4 in. (6 mm) poly sleeve around the capillary at the point where it passes through the entry hole in the duct work. Slit the tubing lengthwise to permit easy installation. You do not normally need caulking or sealant when you use the right size hole and tubing.
16. At the bends, use a TE-6001-8 Averaging Element Mounting Bracket to obtain the correct radius and protect the sensing element. The radius of each bend of the sensing element must be at least 3 in. (76 mm), but not exceed 14 in. (355 mm).

Mounting in small ducts with inaccessible coils

Note:

- Begin mounting at the bottom and work up to the thermostat.
- When the duct is covered with insulation, mount stat to standard electrical box and cover.

Figure 5: Mounting Low Temperature Cutout Controls in small ducts with inaccessible coils

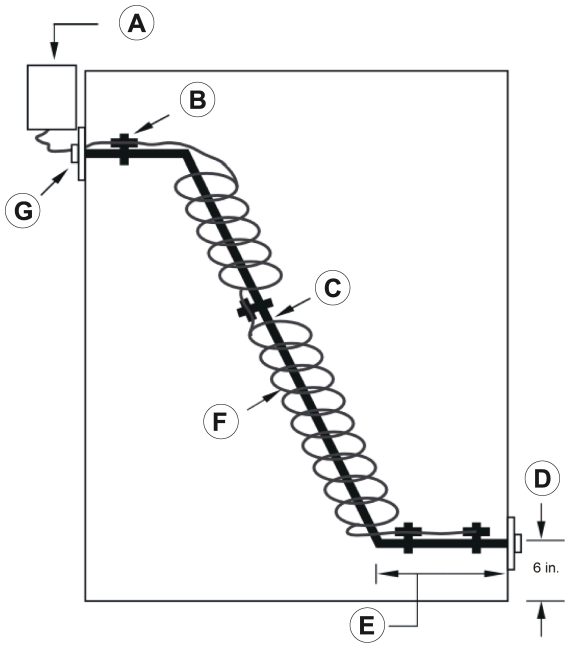

Table 4: Mounting controls in small ducts with inaccessible coils callouts

Callout	Description
A	A11
B	Support the element at both ends and every 2 in. to 3 in. along the element. Consider using a short piece of poly over the element or capilliary at the supports.
C	Use 3/8 in. copper or 1/2 in. EMT to support the element.
D	Must be within 6 in. of the bottom of the coil. The bottom is the most important part of the coil to protect.
E	Minimum of 1 ft horizontal sensing. No coils on the flat portion of the bracket.
F	Mount the element at a slight downward incline. Keep the loops horizontal or below and make them the same size.
G	Cut a hole of minimum 2 1/4 in. in size. Use 1/2 in. box connectors on each end of the EMT to secure it to the box covers.

Mounting in an inaccessible location

1. Determine the mounting location for the low limit control.
   - Avoid any moving parts within the duct, such as dampers.
   - When the duct is covered with insulation, mount the control to a standard electrical 4- square box and cover.
2. Using Figure 5 as a guide, measure the duct and calculate the required length and height of the element support.
3. Use 1/2 in. (1.3 cm) of EMT to build the support assembly outside of the duct.

   Note: You can substitute 3/8 in. (1 cm) of hard copper tubing for 1/2 in. (13 mm) of EMT when you build the support. These instructions assume the use of EMT.
4. Starting at the bottom of the coil, distribute the sensing element around the support and use a tie-wrap to secure it in place. Keep the loops horizontal or inclined slightly downward at an angle not greater than 5° and uniform in size (see Figure 5).
5. Consider the use of Minerallac conduit hangers or equivalent to provide anchoring points on the support where needed.
6. Place a 1/2 in. (1.3 cm) EMT connector on each end of the support. These connectors protrude through the knockout hole on the 4 in. (10.1 cm) box covers, which are used as mounting plates at each end of the support.
7. At the upper end of the duct, use a large hole saw of minimum size 2-1/4 in. (57 mm) to drill the entry hole for the sensing element or support assembly.
8. At the lower end of the duct, drill another hole. Use the same hole saw that you used to cut the entry hole.
9. A larger hole provides easier access for mounting. Position this hole so that the lower portion of the sensing element is within 6 in. (152 mm) of the bottom of the coil.
10. Cut a notch in another 4 in. (10.1 cm) box cover. Use the notch to secure the upper end of the support assembly. Locate the notch so that you can position the capillary (whip) close to the support. See Figure 6.
11. Place a 4 in. (10.1 cm) box cover, with the center knockout removed, over the upper end of the support assembly, and use a lock nut to fasten the support to the box cover.
12. Feed the sensing element or support assembly through the entry hole at the upper end, and position the lower end of the support to protrude through the exit hole at the bottom on the far side.
13. Place a 4 in. (10.1 cm) box cover with the center knockout removed over the end of the support and, using a lock nut, fasten the support in place at the lower end.

Figure 6: 4-square cover upper mount with center 1/2 in. knockout.

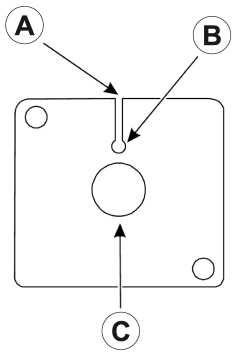

Table 5: 4-square cover upper mount callouts

Callout	Description
A	Use a hacksaw to cut a slot for the sensor to pass through.
B	Use a drill to cut a 1/4 in. hole. Cover the element with poly for protection.
C	To secure 1/2 in. EMT to the box cover.

14. Carefully place the capillary tube in the slot and apply a short piece of 1/4 in. (6.4 mm) poly tubing, slit lengthwise, around the capillary where it passes through the notch.
15. Screw down the corners of the box cover to hold the upper end of the support assembly in place.
16. Use the mounting bracket and self-tapping screws to fasten the control to the side of the duct, ensuring a downhill element all the way to the bottom of the control.

Wiring

For most AHU installations, it is more cost-effective to wire the low limit and other safeties with low voltage Class 2 wiring and add a shutdown relay at the motor starter.

This practice provides the control to share raceways with other low voltage cables for the system.

CAUTION

Risk of Electric Shock

Disconnect power supply before making electrical connections to avoid electric shock.

Important: Make all wiring connections in accordance with local, national, and regional regulations. Do not exceed the electrical ratings.

Setup and adjustments

Important:

- Do not adjust the pointer beyond the highest or lowest indicator marks on the control's temperature scale. Adjusting the pointer beyond the indicator marks may damage screw threads, may cause inaccurate control operation, and voids the warranty. Also, most controls with spot sensitive sensing elements used for coil protection are set and sealed at 35°F (1.6°C). Attempting to set them lower can damage the control.
- After adjusting the control settings and before leaving installation, verify equipment and control operation, and verify control setpoint with a reliable thermometer.

Adjust the setpoint by turning the adjustment screw until the pointer is opposite the cutout point that you want. Access the adjustment screw at the bottom of the control or at the top when you remove the cover.

Checkout procedure

Before you leave the installation, observe at least three complete operating cycles to make sure that all components function correctly. When used as a low temperature cutout control, simulate operation by actuating contacts to confirm that electrical connections are correct.

Operation

The A11D and A11E models have SPDT contact action; models A11A and A11B have SPST contacts. When 16 in. (406 mm) or more of an A11 control's sensing bulb senses a temperature equal to or lower than the setpoint, the contacts open on SPST controls, or the circuit between the Red and Yellow terminals open on SPDT controls.

The A11A and A11D models lock out when the temperature decreases below the control's temperature setpoint. Manual reset is a requirement of these models. Press and release the reset lever after the temperature increases 12F° (6.7C°) or more above the setpoint in order to reset. The A11B and A11E automatically reset on an increase in temperature.

Note: A11 Series low temperature cutout controls have 6.1 m of 3.2 mm O.D. tubing and 1.2 m capillary (20 ft of 1/8 in. O.D. tubing and 4 ft capillary.)

Table 6: A11 Series Low Temperature Cutout Controls

Code number	Switch action	Range	Differential	Maximum bulb temperature	Range adjuster
A11A-1C	SPST open low	35°F to 45°F (2°C to 7°C)	Manual reset	250°F (121°C)	Screwdriver slot
A11B-1C			6.7°F (12°C) fixed		
A11D-5C	SPDT		Manual reset		
A11E-5C			6.7°F (12°C) fixed		

Repair Information

If the A11 Series Low Temperature Cutout Control fails to operate within its specifications, replace the unit. For a replacement A11 Series Control, contact the nearest Johnson Controls® representative.

A11 electrical rating

Table 7: A11 Series electrical rating

Description	cULus		
Volts AC 50/60 Hz	**120**	**208**	**240**
Full load amperes	16	9.2	8
Lock rotor amperes	96	55.2	48
Resistive amperes	16	9.2	8
Pilot duty	125 VA, 24 VAC to 277 VAC		

A11 conformity declaration

Table 8: Conformity declaration

Information	Description	
Purpose of the control	Low temperature cutout control	
Construction of the control	Electromechanical independently mounted control	
Number of cycles	30K cycles auto reset, 6K cycles manual reset	
Method of mounting the control	Permanently attached through hole in mounting bracket	
Method of earthing the control	Wiring binding screw terminal	
Type 1 or Type 2 action	Type 1.B; micro-disconnection	
External pollution situation	Pollution degree 3	
Internal pollution situation	Pollution degree 2	
Rated impulse voltage	4,000 VAC	
Ball pressure temperature	Switch component 302°F (150°C)	
Field wiring rating	Use copper conductors only, rated at least 194°F (90°C)	
Switch	SPST (A11A, A11B), SPDT (A11D, A11E)	
Enclosure	UL: Type 1 (NEMA)	
Wiring connection	Three color-coded screw terminals, SPDT only, and one ground terminal	
Conduit connection	One 7/8 in. (22 mm) hole for 1/2 in. (12.7 mm) trade size (or PG16) conduit	
Ambient conditions	0°F (-18°C) to 140°F (60°C)	
Compliance	North America	cULus listed; UL60730, CSA E60730 File SA516

Product warranty

This product is covered by a limited warranty, details of which can be found at www.johnsoncontrols.com/buildingswarranty.

Software terms

Use of the software that is in (or constitutes) this product, or access to the cloud, or hosted services applicable to this product, if any, is subject to applicable end-user license, open-source software information, and other terms set forth at www.johnsoncontrols.com/techterms. Your use of this product constitutes an agreement to such terms.

Single point of contact

APAC	Europe	NA/SA
JOHNSON CONTROLS C/O CONTROLS PRODUCT MANAGEMENT NO. 32 CHANGJIJANG RD NEW DISTRICT WUXI JIANGSU PROVINCE 214028 CHINA	JOHNSON CONTROLS WESTENDHOF 3 45143 ESSEN GERMANY	JOHNSON CONTROLS 507 E MICHIGAN ST MILWAUKEE WI 53202 USA

Contact information

Contact your local branch office: www.johnsoncontrols.com/locations

Contact Johnson Controls: www.johnsoncontrols.com/contact-us

© 2021 Johnson Controls. All rights reserved. All specifications and other information shown were current as of document revision and are subject to change without notice.