A19D Series Surface Mounted Temperature Controls Installation Guide

LIT-125070 Part No. 997-360 Rev. M

2023-10-18

Applications

Figure 1: A19D Series Surfaced Mounted Temperature Control and mounting straps



Important: Use the A19 control only as an operating control. Where failure or malfunction of the control could lead to personal injury or property damage to the controlled equipment or other property, additional precautions must be designed into the control system. Incorporate and maintain other devices, such as supervisory or alarm systems or safety or limit controls, intended to warn of or protect against failure or malfunction of the control.

A19D Series Surface Mounted Temperature Controls are reliable, durable On/Off temperature controls with line-voltage single pole, double throw (SPDT) switches. The A19D Series controls are designed primarily for fluid piping applications and include two adjustable mounting straps for mounting the control directly to a pipe.

The sensing element has a liquid charge and provides a fast response to a change in temperature. A range adjustment knob and a visible temperature scale are standard. Models are also available with a snap-in plug in the cover for concealed screwdriver slot adjustment.

Standard A19D control applications include high temperature detection on boiler applications and low temperature detection on unit heaters coil applications.

Mounting

Observe the following guidelines when you mount an A19D control.

Location guidelines

Important:

- Do not install the A19D control where the control housing temperature exceeds 140°F (60°C) or the temperature at the sensing element exceeds 250°F (121°C).
- Do not install the A19D control on a riser pipe that includes a flow control device. Flow control devices could prevent circulation of fluid in the pipe and provide a false temperature to the control.

The A19D control is not position sensitive and you can mount it on a pipe in any position.

For standard boiler applications, mount the control on a vertical supply riser approximately 2 ft (0.6 m) above the boiler.

For typical unit heater applications, mount the control on the horizontal return adjacent to the unit heater.

Mounting the A19D control

About this task:

WARNING

Risk of Electric Shock.

Do not enclose any excess strap inside the enclosure when installing the cover. Doing so may result in the metal strap contacting the wiring terminals and cover, and may result in severe personal injury or death.

Figure 2: Mounting the A19D control

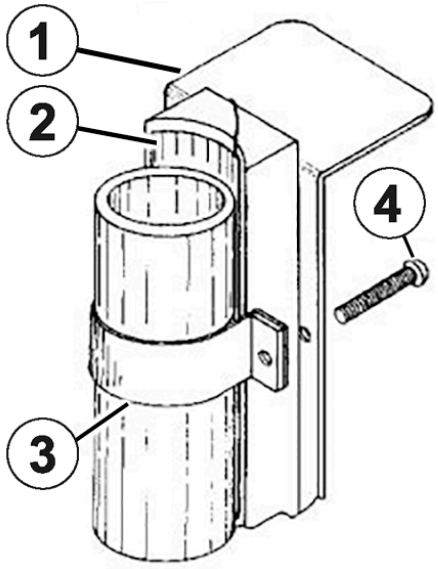

Callout	Description
1	Case
2	Sensing element
3	Strap
4	Clamp screw

1. Prepare the pipe for mounting. If the pipe is insulated, remove a 5 in. (127 mm) section of insulation. Clean the pipe surface to remove all insulating material, scale, and rust where the control is mounted.
2. Remove the control cover.
3. Tighten the clamp screw loosely to the flange of the strap by only three or four threads. See Figure 2.
4. Place the control on the pipe, wrap the strap around the pipe, and place the slot in the strap over the tab on the right side of the case.
5. Tighten the clamp screw to a snug fit.
6. Clip off or fold back the excess strap outside the case of the control.
7. If insulation was removed to mount the control, trim and add the insulation on the pipe in the back of the control to minimize the effect of ambient air temperature on the sensing element.
8. Put back the cover.

Wiring

WARNING

Risk of Electric Shock.

Disconnect the power supply before making electrical connections. Contact with components carrying hazardous voltage can cause electric shock and may result in severe personal injury or death.

Important:

Use copper conductors only. Make all wiring connections in accordance with local, national, and regional regulations. Do not exceed the A19D control's electrical ratings.

Figure 3: A19 Series switch action for SPDT

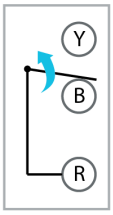

Note: The figure shows the direction of the switch action when the temperature increases.

The terminals of the SPDT switch are color coded. The red terminal is common. The red to blue contacts open on temperature increase and the red to yellow contacts close on temperature increase.

Important: Use only the supplied 8-32 x 1/4 in. terminal screws. Do not substitute screws of a different size.

Adjusting the temperature set point stop

About this task:

Figure 4: Set point stop screw

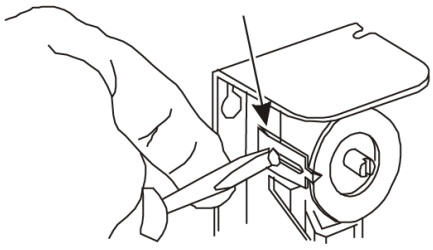

The temperature set point stop is an integral part of these controls and is field adjustable. To set the stop, complete the following steps:

1. Set the dial temperature to the required stop temperature.
2. Remove the control cover.
3. Loosen the cutout stop screw.
4. Slide the screw to the front of the temperature control against the plastic step behind the dial.

   Note: Sometimes an exact stop setting is not possible and you must set the stop to the closest step corresponding to the dial setting.

5. Tighten the screw.

Range adjuster

Figure 5: Range adjuster options

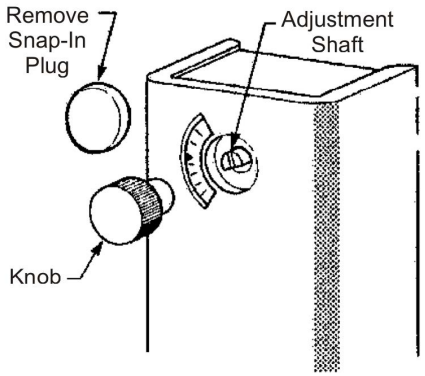

A screwdriver slot with a visible scale or a screwdriver slot with concealed scale and solid cover are optional at no extra cost. These are only available for quantity orders.

Models are available with a field-convertible adjustment kit, which provides conversion to knob, concealed screwdriver slot, or external screwdriver slot adjustment.

Leaving the installation

Before you leave the installation, observe at least three complete operating cycles to ensure that all components function correctly.

Repairs and replacements

Do not make field repairs. For a replacement control, contact your Johnson Controls® representative.

Technical specifications

Table 1: A19D technical specifications

Specification	Description
Product code	A19DAC: SPDT switch, standard differential A19DAF: SPDT switch, narrow differential
Adjustable temperature range	A19DAC: 100°F to 240°F (40°C to 120°C) A19DAF: 200°F to 240°F (95°C to 120°C)
Fixed temperature differential	A19DAC: 10°F (6.0°C) A19DAF: 3.5°F (1.9°C)
Maximum ambient operating temperature	Controller housing: 140°F (60°C) Sensor element: 250°F (121°C)
Switch contact action	Snap acting, enclosed dust-protected Pennswitch Red to yellow terminal contacts close on temperature increase Red to blue terminal contacts open on temperature increase
Terminal screws	No. 8-32 x 1/4 in. binder head with cup washers
Enclosure	Type 1 (NEMA), general purpose. galvanized steel, black baked enamel.
Mounting	Clamp-on. Strap included.
Shipping weight	1.2 lb (.54 kg)

Conformity declaration information

Table 2: A19D conformity information

Information	Description
Purpose of the control	Temperature control
Method of mounting the control	Pipe-mounted. Attached by a strap around the pipe.
Method of grounding the control	Wiring binding screw terminal
Type 1 or Type 2 action	Standard models: Type 1.B micro-disconnection 600 V rating models: Type 1.C micro-interruption
External pollution situation	Pollution degree 3
Rated impulse voltage	6,000 VAC
Conformity	UL Guide No. XAPX File No. E6688 cUL Guide No. XAPX7 File No. E6688

ⓘ **Note:** The 600 VAC rating is for pilot duty only.

Electrical ratings

Table 3: A19DAC cULus electrical ratings

VAC 60 Hz	120	208	240	277
Full load amperes	16.0	9.2	12.0	—
Locked rotor amperes	96.0	55.2	72.0	—
Resistive amperes, SPST (SPDT)	22.0 (16.0)			
Pilot duty	125 VA, at 24 VAC to 600 VAC			

Table 4: A19DAF cULus electrical ratings

VAC 60 Hz	120	208	240	277
Full load amperes	6.0	3.4	3.0	—
Locked rotor amperes	36.0	20.4	18.0	—
Resistive amperes, SPST or SPDT	15.0			
Pilot duty	125 VA, at 24 VAC to 277 VAC			

Single point of contact

APAC	EU	UK	NA/SA
JOHNSON CONTROLS C/O CONTROLS PRODUCT MANAGEMENT NO. 32 CHANGJIANG RD NEW DISTRICT WUXI JIANGSU PROVINCE 214028 CHINA	JOHNSON CONTROLS VOLTAWEG 20 6101 XK ECHT THE NETHERLANDS	JOHNSON CONTROLS TYCO PARK GRIMSHAW LANE MANCHESTER M40 2WL UNITED KINGDOM	JOHNSON CONTROLS 5757 N GREEN BAY AVE. GLENDALE, WI 53209 USA

Product warranty

This product is covered by a limited warranty, details of which can be found at www.johnsoncontrols.com/buildingswarranty.

Contact information

Contact your local Johnson Controls representative: www.johnsoncontrols.com/locations

Contact Johnson Controls: www.johnsoncontrols.com/contact-us

© 2024 Johnson Controls. All rights reserved. All specifications and other information shown were current as of document revision and are subject to change without notice.