A28 Series Two-Stage Temperature Controls With Type 1 (NEMA) Enclosure Installation Guide

LIT-121090 Part No. 996-318 Rev. G

2023-10-18

Applications

Figure 1: A28 control



These two-stage controls are designed to cover a broad range of general purpose operating temperature control applications in the refrigeration, air conditioning, and heating fields.

Two single-pole, double-throw (SPDT) switches facilitate independent control circuits. You can wire each switch for open-high or close-high action as required, to provide automatic changeover on heating-cooling or similar applications. Models are available with a narrow differential on each switch. A jumper across the common terminals is supplied as a standard feature. Models are available with a fixed or adjustable interstage differential.

Important: Use the A28 control only as an operating control. Where failure or malfunction of the control could lead to personal injury or property damage to the controlled equipment or other property, additional precautions must be designed into the control system. Incorporate and maintain other devices, such as supervisory or alarm systems or safety or limit controls, intended to warn of or protect against failure or malfunction of the control.

Operation

In the following figure, the high stage switch is on the left. The low stage switch is on the right.

Figure 2: Interior of an A28 control



When the temperature rises to the dial setting, the circuit opens between R and B of the low stage terminal (RB_L). Simultaneously, the circuit closes between R and Y of the low stage terminal (RY_L). When the temperature rises, the high-stage RB switch opens (RB_H). Simultaneously, the high-stage RY switch closes (RY_H). See the following figure.

The reverse sequence occurs when the temperature falls.

Figure 3: A28 switch action

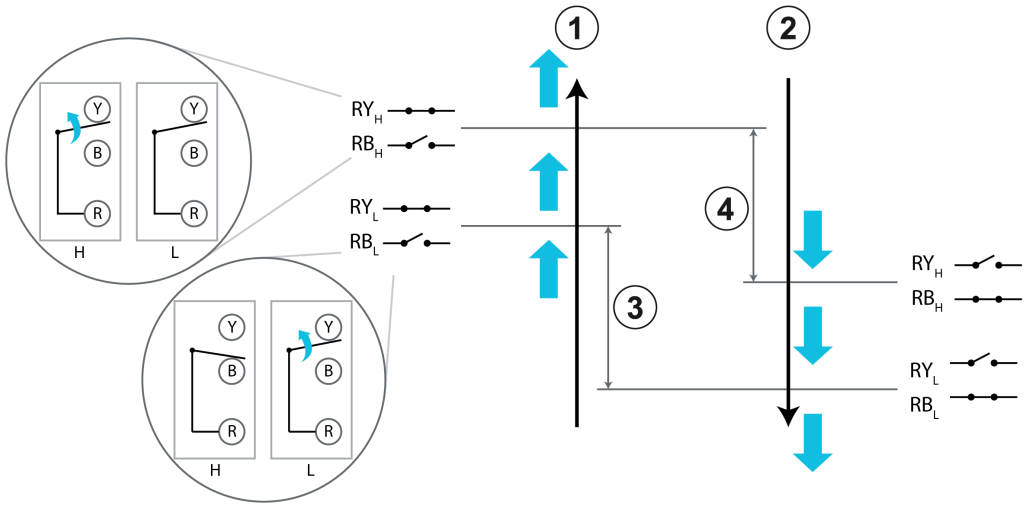

Callout	Description
1	Temperature rise
2	Temperature fall
3	Low stage
4	High stage

Installation

WARNING

Risk of Electrical Shock.

Disconnect the power supply before mounting and wiring to prevent possible electrical shock. On multiple circuit units, more than one circuit may have to be disconnected.

Follow the equipment manufacturer's instructions if provided. If instructions are not provided, observe the following mounting and wiring guidelines.

Mounting

For standard applications, mount the control to a surface through the holes in the back of the case.

NOTICE

Risk of Property Damage.

Do not dent or deform the sensing bulb. Dents or deformations in the sensing bulb can change the calibration, may cause the control to operate at temperatures other than the set point, and may result in other property damage. When the bulb mounting clip is used to mount the bulb near the refrigerant tubing, ensure the sheet metal screw does not pierce the tubing.

Important:

- On rough mounting surfaces use the top two mounting holes only. If you mount the control on an uneven surface using screws in all four holes, the case might twist enough to affect the control's calibration and operation.

Figure 4: Support tube on a Style 1 swaged bulb

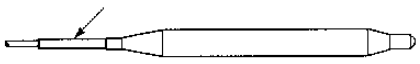

You can use the Style 1 swaged bulb for clamp-on or closed tank applications.

Mounting for closed tanks without a well

About this task:

> **CAUTION**
>
> **Risk of Personal Injury.**
>
> In closed tank applications, relieve any system pressure before loosening or attempting to replace an existing bulb well.

For closed tank applications without a well assembly, Part No. FTG13A-600R packing nut assembly may be supplied. Use the packing nut assembly with the Style 1 bulb for direct immersion applications.

Figure 5: FTG13A-600R packing nut assembly

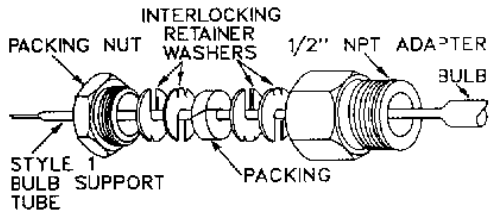

1. Place the parts over the support tube section of the element and place the bulb in the tank.
2. Ensure that the tank is drained so the liquid level is below the tank opening.
3. Tighten the 1/2 in. NPT adapter.
4. Screw the packing nut into the adapter with the retaining washers and packing in place. See Figure 5.

Mounting with a bulb well

1. Install the bulb well into the tank.
2. Remove the bushing from the bulb well, and slide the bushing over the capillary.
3. Place the bulb and bushing into the well.
4. Push the bulb into position at the bottom of the well.
5. Tighten the set screw at the end of the adapter to hold the bulb in position.

Bulb wells

Figure 6: Bulb well for liquid immersion applications

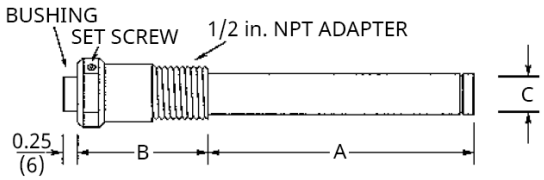

Table 1: Bulb well assembly dimensions

Part number	Dimensions	
	A, in. (mm)	
WEL14A-602R	4.94	121
WEL14A-603R	5.81	148
WEL16A-601R	2.81	71

Note: A28 bulb lengths vary. Check the bulb length before you choose a well.

Wiring

Follow the equipment manufacturer's diagrams if provided. Wire the control to conform to local, national, and regional regulations. The wiring terminals of each Pennswitch are color coded for convenience. Red (R) is the common terminal. The circuit from R to yellow (Y) closes on a temperature increase. The circuit from R to blue (B) opens on temperature increase. Use copper conductors only.

Note: Use the supplied 8-32 x 1/4 in. binder head terminal screws. Do not substitute screws of a different size.

Wiring diagram

Figure 7: Standard wiring diagram of a refrigeration compressor with a single stage unloader

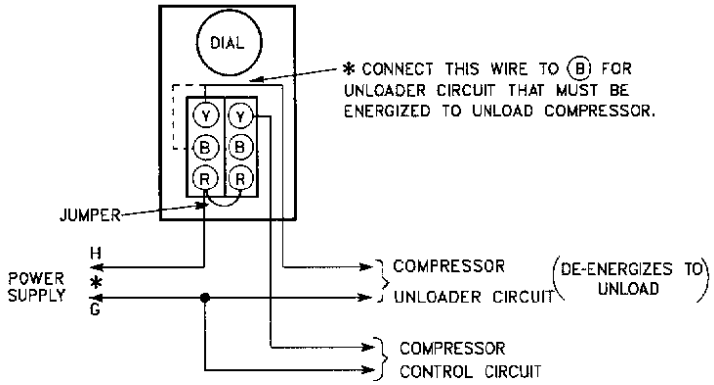

You can sequence two compressor packages with the same circuit.

Adjustments

Figure 8: Convertible adjustment

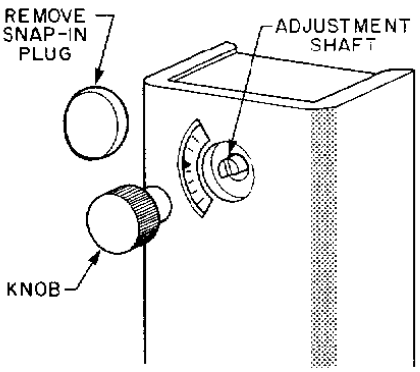

All models have a fixed differential on each Pennswitch. Knob or screwdriver slot adjustment of setpoint is available.

You can change convertible adjustment models between concealed screwdriver slot adjustment, knob adjustment, and external screwdriver slot adjustment. Convertible models come with a snap-in plug in the cover to provide concealed screwdriver slot adjustment. For exposed screwdriver slot adjustment, remove the snap-in plug. For knob adjustment, press the knob onto the slotted shaft.

The convertible adjustment models with remote bulb include a bulb mounting clip.

Adjusting the interstage differential

Figure 9: Adjustable interstage differential

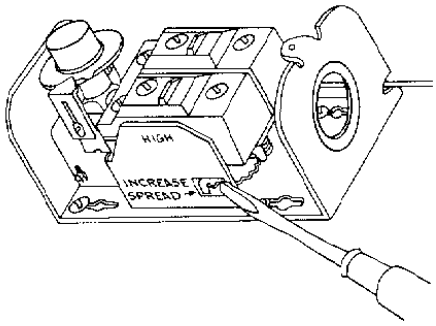

To widen the interstage differential and increase the speed, complete the following steps:

1. Insert a small screwdriver into the cam.
2. Rotate the cam counterclockwise.

Adjusting the low temperature set point stop

About this task:

Figure 10: Set point stop screw

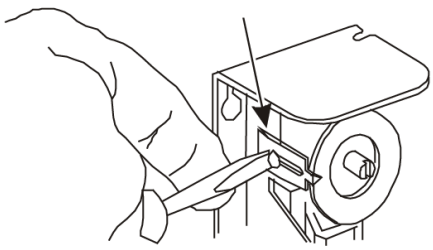

The temperature set point stop is an integral part of these controls and is field adjustable. To set the stop, complete the following steps:

1. Set the dial temperature to the required stop temperature.
2. Remove the control cover.
3. Loosen the cutout stop screw.
4. Slide the screw to the front of the temperature control against the plastic step behind the dial.

   Note: Sometimes an exact stop setting is not possible and you must set the stop to the closest step corresponding to the dial setting.

5. Tighten the screw.

Leaving the installation

Before you leave the installation, observe at least three complete operating cycles to ensure that all components function correctly.

Repairs and replacements

Do not make field repairs. For a replacement control, contact the nearest Johnson Controls® distributor.

Electrical ratings

Table 2: A28AA and A28AB cULus electrical ratings

VAC 60 Hz	120	208	240	277
Full load amperes	16.0	9.2	12.0	—
Locked rotor amperes	96.0	55.2	72.0	—
Resistive amperes, SPST or SPDT	16.0	9.2	8.0	7.2
Pilot duty	125 VA, at 24 VAC to 277 VAC			

Table 3: A28AJ cULus electrical ratings

VAC 60 Hz	120	208	240	277
Full load amperes	6.0	3.4	3.0	—
Locked rotor amperes	36.0	20.4	18.0	—
Non-inductive or resistance load amperes SPST or SPDT	15.0	9.2	8.0	7.2
Pilot duty	125 VA, at 24 VAC to 277 VAC			

Note: The total connected load must not exceed 2,000 VA.

Conformity declaration information

Table 4: A28 conformity information

Information	Description
Purpose of the control	Two-stage temperature control
Method of mounting the control	Surface-mounted. Permanently attached through holes in the back of the case.
Method of grounding the control	Wiring binding screw terminal
Type 1 or Type 2 action	Type 1.B micro-disconnection
External pollution situation	Pollution degree 3
Rated impulse voltage	4,000 VAC

Single point of contact

APAC	EU	UK	NA/SA
JOHNSON CONTROLS C/O CONTROLS PRODUCT MANAGEMENT NO. 32 CHANGJIANG RD NEW DISTRICT WUXI JIANGSU PROVINCE 214028 CHINA	JOHNSON CONTROLS VOLTAWEG 20 6101 XK ECHT THE NETHERLANDS	JOHNSON CONTROLS TYCO PARK GRIMSHAW LANE MANCHESTER M40 2WL UNITED KINGDOM	JOHNSON CONTROLS 5757 N GREEN BAY AVE. GLENDALE, WI 53209 USA

Product warranty

This product is covered by a limited warranty, details of which can be found at www.johnsoncontrols.com/buildingswarranty.

Contact information

Contact your local Johnson Controls representative: www.johnsoncontrols.com/locations

Contact Johnson Controls: www.johnsoncontrols.com/contact-us

© 2024 Johnson Controls. All rights reserved. All specifications and other information shown were current as of document revision and are subject to change without notice.