A421 Series Standard Electronic Temperature Controls with and without Power Cords Product Bulletin

LIT-12011972

2023-01-09

Description

The A421 Series Standard Electronic Temperature Controls are single-stage electronic temperature controls with a single-pole, double-throw (SPDT) output relay. The controls feature an adjustable backlit LCD for viewing the temperature and status of other functions, and a three-button touchpad for setup and adjustment. An LED indicates the On or Off status of the output relay.

The A421 Controls are available in low-voltage 24 VAC and high-voltage 120 VAC or 240 VAC models, which provide options for most refrigeration and HVAC applications.

The A421 Controls provide heating or cooling control, sensor offset, temperature setback, adjustable anti-short cycle delay, and a restricted user adjustment mode. The control can display the temperature units in °F or °C. The temperature adjustment range is -40°F to 212°F or -40°C to 100°C.

The A421 Controls are available in Type 1/IP20 high-impact plastic enclosures suitable for surface or DIN rail mounting, as shown in the following figure, and Type 4X/IP66 watertight, corrosion-resistant, surface-mount enclosures.

Figure 1: A421 temperature control



Some A421 Series Control models are equipped with factory-installed power cords. The power cords provide convenient plug-in connection and control of 120 VAC heating and cooling equipment.

Features and benefits

Control front panel LCD

Displays the temperature, parameters, and status. You can adjust the backlight intensity for ambient light conditions. Custom icons display the system and control status.

Basic and advanced programming menu

Provides two levels of parameter adjustment and control. You can set up advanced features in one menu and easily adjust basic parameters in the other menu.

On and Off temperature adjustment

Select the temperature values at which the relay turns on and off, which automatically defines the heating or cooling mode of operation.

Switch-activated temperature setback

Shift the On or Off temperature by an adjustable setback value. When a user-supplied switch closes the binary input control circuit, the control operates at the defined setback temperatures.

Adjustable anti-short cycle delay

Select the minimum time the output relay remains off before the next on cycle. Avoid short cycling, hard starts, and nuisance overload outages on compressors and other inductive applications.

Adjustable sensor offset

Adjust the displayed temperature to the actual sensed temperature.

Optional restricted adjustment mode

Restrict the On/Off adjustment to your defined temperature range.

Sensor failure mode

Select the relay On/Off state in the event of a sensor or sensor wire failure.

Backlight brightness level

Adjust the LCD backlight intensity.

Applications

Important: Use this A421 Series Electronic Temperature Control only as an operating control. Where failure or malfunction of the A421 Series Control could lead to personal injury or property damage to the controlled equipment or other property, additional precautions must be designed into the control system. Incorporate and maintain other devices, such as supervisory or alarm systems or safety or limit controls, intended to warn of or protect against failure or malfunction of the A421 Series Control.

You can use the A421 Control to manage a wide range of single-stage refrigeration or HVAC equipment. See Table 1 for application information by control type. Sample temperature control applications include the following:

- Temperature monitoring and alarming
- On and off control of boilers and chillers
- Boiler and chiller pump control
- Heating or cooling control
- Cooling tower fan control based on water temperature
- Supply, makeup, and mixed air temperature control
- Temperature actuated valve control
- Supply and makeup air damper and fan control
- Condenser fan control based on condenser temperature

Table 1: Applications by A421 control type

Control type	Application family	Wholesale	Agricultural	Beverage	Chillers	Data center	Economizer	Food service	HVA	Ice machines	Process	Refrigeration	Signage	Space heating	Transportation	Ventilation
A421ABC	Standard	X	X	X	X	X	X	X	X	X	X	X	X	X	X	X
A421ABG	Power cord[1]		X	X				X		X	X	X		X		X
A421ABJ	Power cord[2]		X	X				X		X	X	X		X		X
A421AEC	Standard	X	X	X	X	X	X	X	X	X	X	X	X	X	X	X
A421AEJ	Power cord[2]		X	X				X		X	X	X		X		X
A421GBF	Standard	X	X	X	X	X	X	X	X	X	X	X	X	X	X	X
A421GEF	Standard	X	X	X	X	X	X	X	X	X	X	X	X	X	X	X

1 This type features two power cords, with male and female outlets on separate cords. Standard heating applications include salamander and torpedo heaters, and other portable, plug-in heating equipment in construction and agriculture applications. Typical cooling applications include controlling home freezers and refrigerators for home brewing, fermentation, and product storage applications.

2 This type features a single power cord, with male and female outlets on the same cord.

Dimensions

The following figures show the dimensions of the A421 control with Type 1/IP20 enclosure.

Figure 2: A421ABx and A421GBx controls, dimensions, in. (mm)

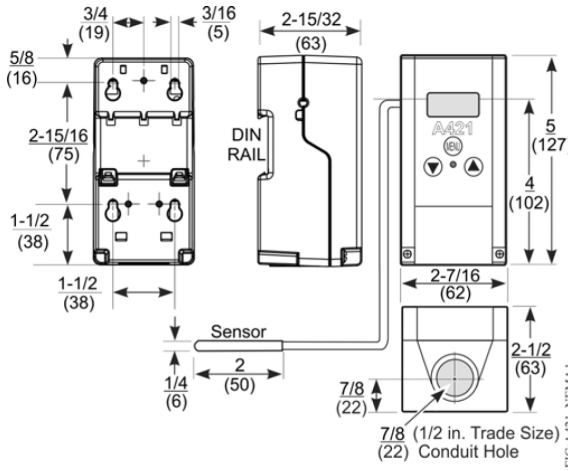

Figure 3: A421ABJ control with one power cord, dimensions, in. (mm)

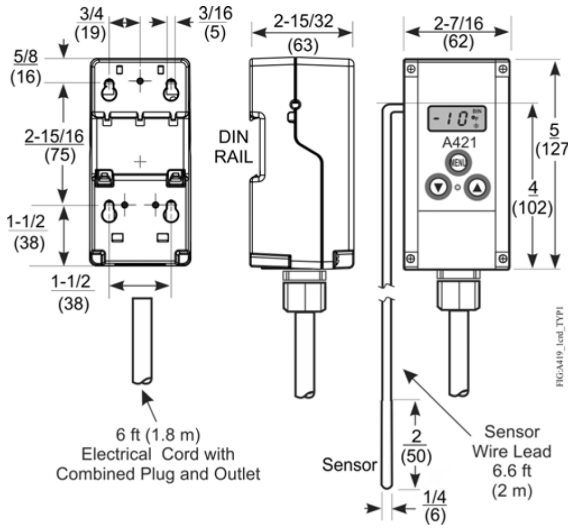

Figure 4: A421ABG control with two power cords, dimensions, in. (mm)

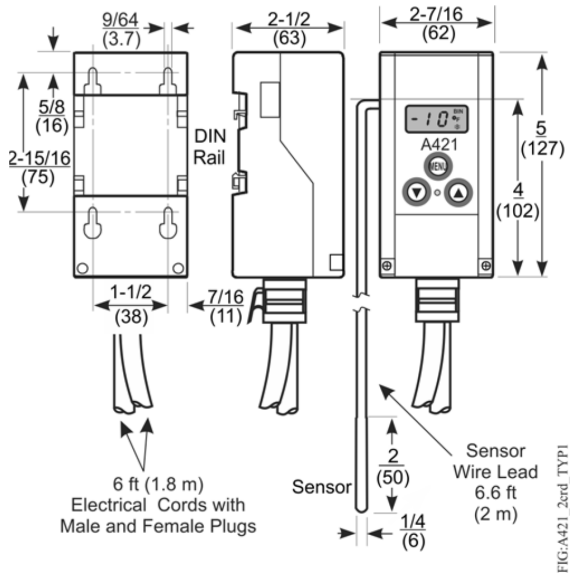

Type 4X/IP66 watertight, corrosion-resistant enclosures

Figure 5: A421AEx and A421GEx controls, dimensions, in. (mm)

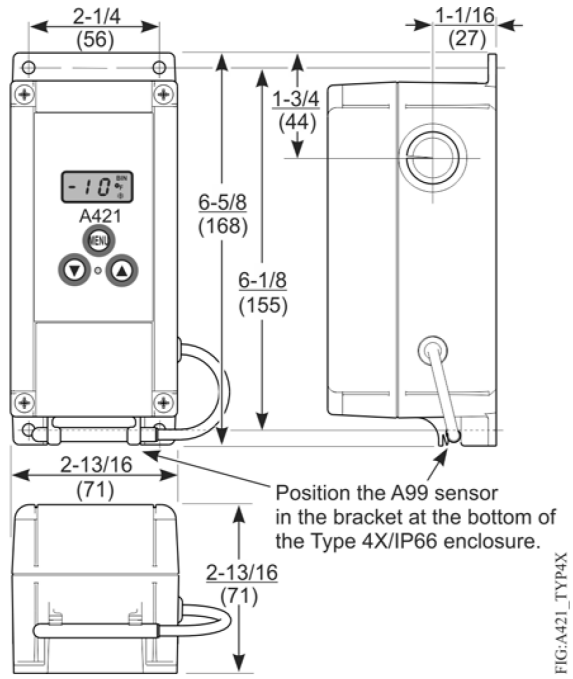

Figure 6: A421ABJ control, A99 sensor, and bracket with power cord, dimensions, in. (mm)

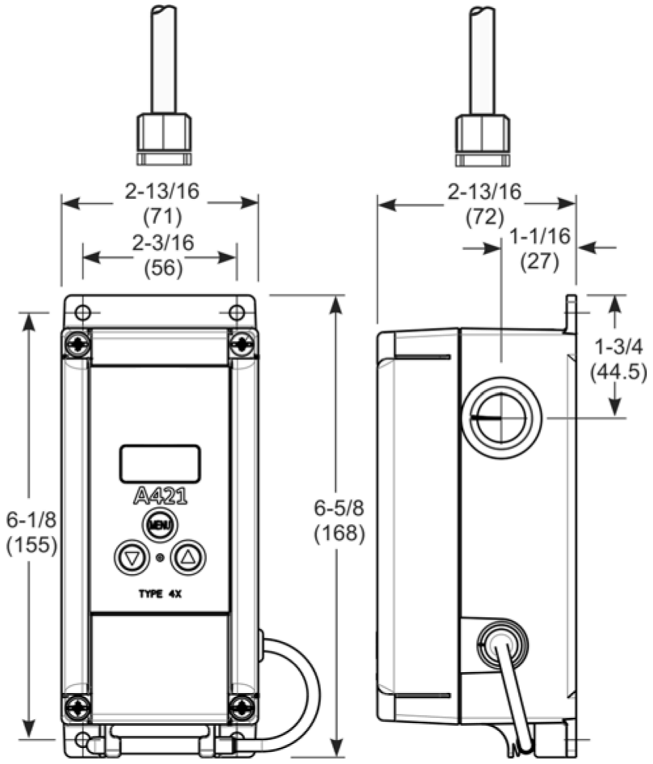

Figure 7: A421ABJ control, A99 sensor, and bracket with power cord



A421 control UI

Figure 8: A421 Series control front panel with LCD display

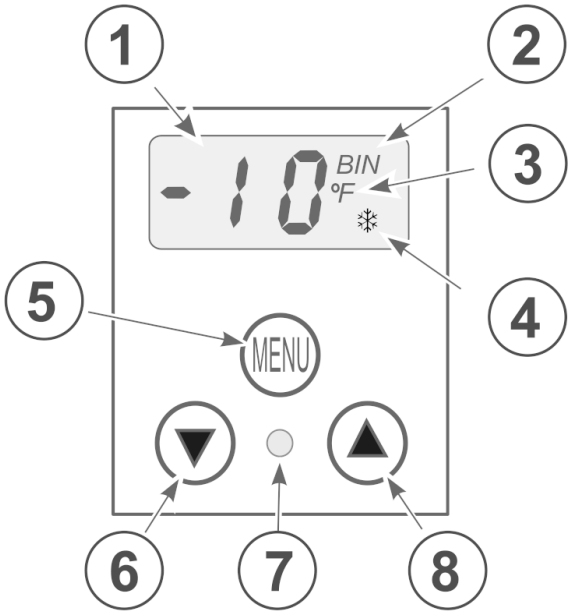

Callout	Description
1	LCD
2	Binary input indicator
3	Temperature units indicator
4	Operating mode indicator: heat or cool
5	Menu button
6	Down button
7	Relay status LED
8	Up button

Front panel

View the status, parameters, temperature, units, operating mode icons, and binary input on the LCD. The flame icon indicates heating mode. The snowflake icon indicates cooling mode.

You can set up the parameters and adjust the control with the three-button touchpad on the front panel. Use the **Menu** button to save values and advance to the next parameter.

The green LED indicator illuminates when the output relay is closed.

Backlight brightness level

Use the backlight brightness level feature to adjust the LCD backlight intensity. At Level 0 the backlight is off. Level 10 is the brightest backlight setting and the system default. The selected backlight brightness level is applied to the LCD during normal operation. When you enter the programming menus to set up the control or press any key, the LCD automatically displays the brightest level. If you do not press a key for 30 seconds, the main screen displays and the backlight setting reverts to the selected brightness level.

SPDT relay output

The terminals on the TB2 terminal block connect to an SPDT dry-contact relay in the A421 control. You can wire the A421 Electronic Temperature Control to use the same power source to power the control and power the controlled load. You can also wire the control to control the relay based on the on and off temperature values.

Relay de-energized: LC is open to LNO, as shown in the following figure, and the relay status LED is off.

Relay energized: LC is closed to LNO and the relay status LED is on.

In following figure, the relay is in the normally closed position. The green relay status LED is off. Connect a power source for the controlled equipment to LC. In standard applications, LNO supplies power from LC to the controlled equipment when the relay is energized.

Figure 9: TB2 terminal block showing connections to the internal SPDT relay

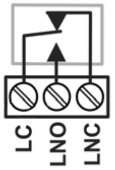

Basic and advanced programming menu

The A421 Series controls have a basic and advanced setup and adjustment menu. Use the advanced menu for initial setup or to adjust the advanced A421 control features. Use the basic menu to set up the most common parameters including the On and Off temperature values.

In restricted adjustment mode, you cannot access either the basic or advanced menu, and can only adjust the temperature within the defined adjustment range. See Restricted adjustment mode for more information.

Switch-activated temperature setback

You can use the temperature setback feature to establish setback temperature On and Off values. When the user-supplied switch closes the binary input control circuit, the LCD displays `BIN` in the upper-right corner and the controller controls the output relay load to these effective setback values.

Anti-short cycle delay

Use the anti-short cycle delay feature to select the minimum time the output relay remains off or de-energized before the next On cycle can start or energize. The delay interval overrides any On condition or load demand and the output relay cannot start until the

selected delay interval elapses, as shown in the following figure.

Use anti-short cycle delay for refrigeration applications to create time for the system pressure to equalize before the compressor restarts.

Figure 10: Anti-short cycle delay

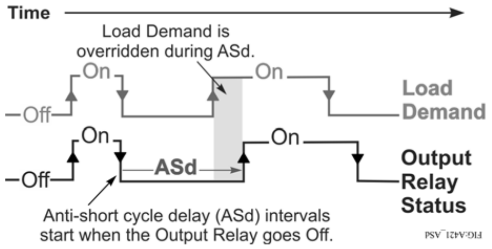

Adjustable sensor offset

Use the sensor temperature offset feature to offset the temperature displayed on the LCD from the temperature sensed at the A99 sensor. This feature is useful when the displayed temperature is different from the temperature measured at the sensor.

Restricted adjustment mode

Use the restricted adjustment mode to limit the temperature range over which end users can adjust the control and avoid over-adjustment of your heating or cooling application.

The adjustment range is limited by setting the high and low temperature stop values. See Figure 11.

You can also set the restricted adjustment range equal to the On and Off temperatures to eliminate any temperature adjustment on the control by end users, effectively locking the control adjustment features.

Ordering information

Table 2 provides ordering information for the A421 standard models with and without power cords available through most Johnson Controls or Penn authorized distributors. See Table 3 and Table 4 to order sensors, mounting hardware, and other accessories for installing A421 controls.

Figure 11: Restricted user adjustment

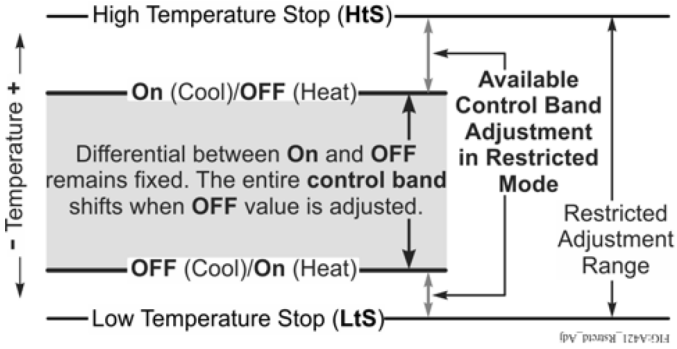

Sensor failure mode

The sensor failure mode defines how the A421 control operates the equipment in the event of a sensor or sensor-wiring failure. The A421 control can be set to run the equipment continuously or to shut it down if the sensor or sensor wire fails. When a failure is detected, SF flashes alternately with OP on the LCD if the sensor circuit is open, or SF and SH if the sensor circuit is shorted.

Repairs and replacement

Do not attempt to repair or recalibrate the A421 Series Electronic Temperature Control. In case of a defective or incorrectly functioning control, contact your nearest authorized Johnson Controls® or Penn distributor or sales representative.

When you contact your Johnson Controls or Penn distributor, have the model number of the control available. You can find this number on the label inside the cover of the control.

Contact your nearest Johnson Controls or Penn distributor or sales representative to order these products.

Contact your local Johnson Controls or Penn representative for more information on options available for high-volume purchase models with specific application requirements.

Table 2: Standard A421 electronic temperature control selection chart

Product code	Description
A421ABC-02C	Line-voltage Type 1 electronic temperature control: Type 1 (NEMA), IP20 standard enclosure for DIN rail and surface-mount applications. Rated for 120/240 VAC. Includes an A99BB-200C temperature sensor with 6.6 ft (2.0 m) cable.
A421ABC-03C	Line-voltage Type 1 electronic temperature control: Type 1 (NEMA), IP20 standard enclosure for DIN rail and surface-mount applications. Rated for 120/240 VAC. Includes an A99BB-300C temperature sensor with 9.75 ft (3.0 m) cable.
A421ABC-04C	Line-voltage Type 1 electronic temperature control: Type 1 (NEMA), IP20 standard enclosure for DIN rail and surface-mount applications. Rated for 120/240 VAC. Includes an A99BB-400C temperature sensor with 13.1 ft (4.0 m) cable.
A421ABC-06C	Line-voltage Type 1 electronic temperature control: Type 1 (NEMA), IP20 standard enclosure for DIN rail and surface-mount applications. Rated for 120/240 VAC. Includes an A99BB-600C temperature sensor with 19.5 ft (6.0 m) cable.

Table 2: Standard A421 electronic temperature control selection chart

Product code	Description
A421ABG-02C	120 VAC Type 1 electronic temperature control with Dual Power Cords: Type 1 (NEMA), IP20 enclosure for DIN rail and surface-mount applications, with 6 ft (1.8 m) cord with 120 VAC grounded male plug and 6 ft (1.8 m) cord with 120 VAC grounded female outlet. Rated for 120 VAC. Includes an A99BB-200C temperature sensor with 6.6 ft (2.0 m) cable.
A421AEC-01C	Line-voltage Type 4X electronic temperature control: Type 4X (NEMA), IP66 watertight enclosure for surface-mount applications. Rated for 120/240 VAC. Includes an A99BB-25C temperature sensor with 9 7/8 in. (0.25 m) cable.
A421AEC-02C	Line-voltage Type 4X electronic temperature control: Type 4X (NEMA), IP66 watertight enclosure for surface-mount applications. Rated for 120/240 VAC. Includes an A99BB-200C temperature sensor with 6.6 ft (2.0 m) cable.
A421AEJ-01C	120 VAC Type 4X electronic temperature control with Piggyback Power Cord: Type 4X (NEMA), IP66 watertight enclosure for surface-mount applications, with 6 ft (1.8 m) single power cord with 120 VAC combination male/female grounded piggyback plug. Rated for 120 VAC. Includes an A99BB-25C temperature sensor with 9 7/8 in. (0.25 m) cable.
A421AEJ-02C	120 VAC Type 4X electronic temperature control with Piggyback Power Cord: Type 4X (NEMA), IP66 watertight enclosure for surface-mount applications, with 6 ft (1.8 m) single power cord with 120 VAC combination male/female grounded piggyback plug. Rated for 120 VAC. Includes an A99BB-200C temperature sensor with 6.6 ft (2.0 m) cable.
A421GBF-02C	Low-Voltage Type 1 electronic temperature control: Type 1 (NEMA), IP20 standard enclosure for DIN rail and surface-mount applications. Rated for 24 VAC Class 2, safety extra low voltage. Includes an A99BB-200C temperature sensor with 6.6 ft (2.0 m) cable.
A421GEF-01C	Low-Voltage Type 4X electronic temperature control: Type 4X (NEMA), IP66 watertight enclosure for surface-mount applications. Rated for 24 VAC Class 2, safety extra low voltage. Includes an A99BB-25C temperature sensor with 9 7/8 in. (0.25 m) cable.
A421GEF-02C	Low-Voltage Type 4X electronic temperature control: Type 4X (NEMA), IP66 watertight enclosure for surface-mount applications. Rated for 24 VAC Class 2, safety extra low voltage. Includes an A99BB-200C temperature sensor with 6.6 ft (2.0 m) cable.

Table 3: Accessories for the A421 controls

Product code	Description
BKT287-1R	12 in. (305 mm) long DIN rail section
BKT287-2R	36 in. (914 mm) long DIN rail section
PLT344-1R	Two end clamps for DIN rail sections
A99-CLP-1	Surface mounting clip for A99B and A99C Series Temperature Sensors
SHL10-603R	Sun shield for A99B and A99C Series Temperature Sensors
BOX10A-603R	PVC enclosure for A99B and A99C Series Temperature Sensors
WEL11A-601R	Immersion well for applying a sensor in fluid applications

Technical specifications

Table 4: A99 Temperature Sensors selection chart

Product code[1]	Description
A99BA-200C	Positive temperature coefficient (PTC) temperature sensor: Standard probe 2 in. (5.1 cm) with 6.6 ft (2.0 m) shielded polyvinyl chloride (PVC) cable; ambient operating temperature range: -40°F to 212°F (-40°C to 100°C)
A99BB-25C	PTC temperature sensor: Standard probe 2 in. (5.1 cm) with 9 7/8 in. (0.25 m) PVC cable; ambient operating temperature range: -40°F to 212°F (-40°C to 100°C)
A99BB-200C	PTC temperature sensor: Standard probe 2 in. (5.1 cm) with 6.6 ft (2.0 m) PVC cable; ambient operating temperature range: -40°F to 212°F (-40°C to 100°C)
A99BB-300C	PTC temperature sensor: Standard probe 2 in. (5.1 cm) with 9.8 ft (3.0 m) PVC cable; ambient operating temperature range: -40°F to 212°F (-40°C to 100°C)

Table 4: A99 Temperature Sensors selection chart

Product code[1]	Description
A99BB-400C	PTC temperature sensor: Standard probe 2 in. (5.1 cm) with 13.1 ft (4.0 m) PVC cable; ambient operating temperature range: -40ºF to 212ºF (-40ºC to 100ºC)
A99BB-600C	PTC temperature sensor: Standard probe 2 in. (5.1 cm) with 19.7 ft (6.0 m) PVC cable; ambient operating temperature range: -40ºF to 212ºF (-40ºC to 100ºC)
A99BC-25C[1]	PTC temperature sensor: Standard probe 2 in. (5.1 cm) with 9 7/8 in. (0.25 m) high-temperature silicon cable; ambient operating temperature range: -40ºF to 248ºF (-40ºC to 100ºC)
A99BC-100C[1]	PTC temperature sensor: Standard probe 2 in. (5.1 cm) with 3.3 ft (1.0 m) high-temperature silicon cable; ambient operating temperature range: -40ºF to 248ºF (-40ºC to 120ºC)
A99BC-300C[1]	PTC temperature sensor: Standard probe 2 in. (5.1 cm) with 9.8 ft (3.0 m) high-temperature silicon cable; ambient operating temperature range: -40ºF to 248ºF (-40ºC to 120ºC)
A99BC-500C[1]	PTC temperature sensor: Standard probe 2 in. (5.1 cm) with 16.4 ft (5.0 m) high-temperature silicon cable; ambient operating temperature range: -40ºF to 248ºF (-40ºC to 120ºC)
A99BC-1500C[1]	PTC temperature sensor: Standard probe 2 in. (5.1 cm) with 49.2 ft (15.0 m) high-temperature silicon cable; ambient operating temperature range: -40ºF to 248ºF (-40ºC to 120ºC)
A99CB-200C	PTC temperature sensor: Extended probe 6 in. (15.2 cm) with 6.6 ft (2.0 m) PVC cable; ambient operating temperature range: -40ºF to 212ºF (-40ºC to 100ºC)
A99CB-600C	PTC temperature sensor: Extended probe 6 in. (15.2 cm) with 19.7 ft (6.0 m) PVC cable; ambient operating temperature range: -40ºF to 212ºF (-40ºC to 100ºC)

1 When any A99 Series Temperature Sensor is connected to a standard A421 control model, the range of displayed temperature values is -40ºF to 212ºF or -40ºC to 100ºC.

Table 5: A421 Series Electronic Temperature Controls technical specifications

Specification	Description
Power consumption	1.8 VA maximum
Supply power	24 VAC, 50/60 Hz, Class 2:108/110/115/120 or 208/230/240 VAC, 50/60 Hz
Ambient conditions	Type 1/IP20: Operating: -40°F to 150°F (-40°C to 66°C), 0% to 95% RH noncondensing Shipping and storage: -40°F to 185°F (-40°C to 85°C), 0% to 95% RH noncondensing
	Type 4X/IP66: Operating: -40°F to 140°F or (-40°C to 60°C) Shipping and storage: -40°F to 140°F (-40°C to 60°C)
Temperature control range	-40°F to 212°F or (-40°C to 100°C)
Sensor type	A99 PTC temperature sensor: 1,035 ohm at 77°F (25°C)
Sensor offset range	±5ºF or ±3ºC
Enclosure material	Type 1: IP20 high-impact thermoplastic or Type 4X: IP66 watertight, corrosion-resistant, high-impact thermoplastic ⓘ **Note:** You must torque the cover screws on the enclosures to 10 to 12 in·lb (1.1 N·m to 1.4 N·m) to achieve Type 1 or Type 4X rating.
Compliance	North America: cULus Listed; UL 60730, File E27734; FCC Compliant to CFR47, Part 15, Subpart B, Class B Industry Canada (IC) Compliant to Canadian ICES-003, Class B limits
CE	Europe: CE Mark – Johnson Controls declares that this product is in compliance with the essential requirements and other relevant provisions of the EMC Directive; Low Voltage Directive.
	Australia: RCM Compliant

The performance specifications are nominal and conform to acceptable industry standards. For application at conditions beyond these specifications Johnson Controls shall not be

liable for damages resulting from misapplication or misuse of its products.

North American emissions compliance

United States

This equipment has been tested and found to comply with the limits for a Class B digital device, pursuant to Part 15 of the FCC Rules. These limits are designed to provide reasonable protection against harmful interference in a residential installation. This equipment generates, uses and can radiate radio frequency energy and, if not installed and used in accordance with the instructions, may cause harmful interference to radio communications. However, there is no guarantee that interference will not occur in a particular installation. If this equipment does cause harmful interference to radio or television reception, which can be determined by turning the equipment off and on, the user is encouraged to try to correct the interference by one or more of the following measures:

- Reorient or relocate the receiving antenna.
- Increase the separation between the equipment and receiver.
- Connect the equipment into an outlet on a circuit different from that to which the receiver is connected.
- Consult the dealer or an experienced radio/TV technician for help.

Warning (Part 15.21)

Changes or modifications not expressly approved by the party responsible for compliance could void the user's authority to operate the equipment.

Canada

This Class (B) digital apparatus meets all the requirements of the Canadian Interference-Causing Equipment Regulations.

Cet appareil numérique de la Classe (B) respecte toutes les exigences du Règlement sur le matériel brouilleur du Canada.

Industry Canada Statement(s)

This device complies with Industry Canada licence-exempt RSS standard(s). Operation is subject to the following two conditions:

1. This device may not cause interference, and
2. This device must accept any interference, including interference that may cause undesired operation of the device.

Le présent appareil est conforme aux CNR d'Industrie Canada applicables aux appareils radio exempts de licence. L'exploitation est autorisée aux deux conditions suivantes :

1. L'appareil ne doit pas produire de brouillage, et
2. L'utilisateur de l'appareil doit accepter tout brouillage radioélectrique subi, même si le brouillage est susceptible d'en compromettre le fonctionnement.

Product warranty

This product is covered by a limited warranty, details of which can be found at www.johnsoncontrols.com/buildingswarranty.

Software terms

Use of the software that is in (or constitutes) this product, or access to the cloud, or hosted services applicable to this product, if any, is subject to applicable end-user license, open-source software information, and other terms set forth at www.johnsoncontrols.com/techterms. Your use of this product constitutes an agreement to such terms.

Patents

Patents: https://jcipat.com

Single point of contact

APAC	EU	UK	NA/SA
JOHNSON CONTROLS C/O CONTROLS PRODUCT MANAGEMENT NO. 32 CHANGJIANG RD NEW DISTRICT WUXI JIANGSU PROVINCE 214028 CHINA	JOHNSON CONTROLS VOLTAWEG 20 6101 XK ECHT THE NETHERLANDS	JOHNSON CONTROLS TYCO PARK GRIMSHAW LANE MANCHESTER M40 2WL UNITED KINGDOM	JOHNSON CONTROLS 5757 N GREEN BAY AVE. GLENDALE, WI 53209 USA

Contact information

Contact your local Johnson Controls representative: www.johnsoncontrols.com/locations

Contact Johnson Controls: www.johnsoncontrols.com/contact-us

© 2023 Johnson Controls. All rights reserved. All specifications and other information shown were current as of document revision and are subject to change without notice.