Auxiliary Gear

Auxiliary Gear 2

Introduction 2

Key Concepts 3

M100C Actuators 3
AS-CBLPRO-2 7
AS-CBLCON-0 10
AS-CVTPROx00-1 Converter 12
Cable Connections 15
Battery Power Recommendations 20
Function Module Kit (FMK) AS-FMK102-0 23
MM-CVT101-0 30
Relays 33
Transformer Modules 42
Ordering Information 45

Detailed Procedures 46

Installing an FMK102 into the Universal Packaging Module (UPM) or Mounting in the Horizontal Position 46
Mounting the FMK Perpendicular on a Wall or in an Enclosure 47
Setting Up the B & B 485TBLED Converter for Use with Johnson Controls N2 Devices 49

© 2006 Johnson Controls, Inc.

Auxiliary Gear

Introduction

This document describes accessories used with various Johnson Controls® Application Specific Controllers (ASCs), such as the Air Handling Unit (AHU) controller, Unitary (UNT) controller, Variable Air Volume (VAV) controller, Variable Air Modular Assembly (VMA), DX-9100, TC-9100, XTM, and XT-9100.

The accessories in this document include:

- Actuators
- AS-CBLPRO-2
- AS-CBLCON-0
- AS-CVTPROx00-1 Converter
- Function Module Kit (FMK)
- MM-CVT101-0
- Relays
- Transformer Modules

This document also contains ordering information and describes how to:

- install an FMK102 into the Universal Packaging Module (UPM) or mount the FMK102 in the horizontal position
- mount the FMK perpendicular on a wall or in an enclosure
- set up the B & B 485TBLED converter for use with Johnson Controls® N2 devices

Key Concepts

M100C Actuators

The M100C Series Motor Actuator is used in damper and valve applications requiring proportional control from a digital controller. The M100C communicates with AHU/UNT/VAV controllers depending on the position of the 8-pin Zone Bus Address DIP switch.

Wiring Considerations

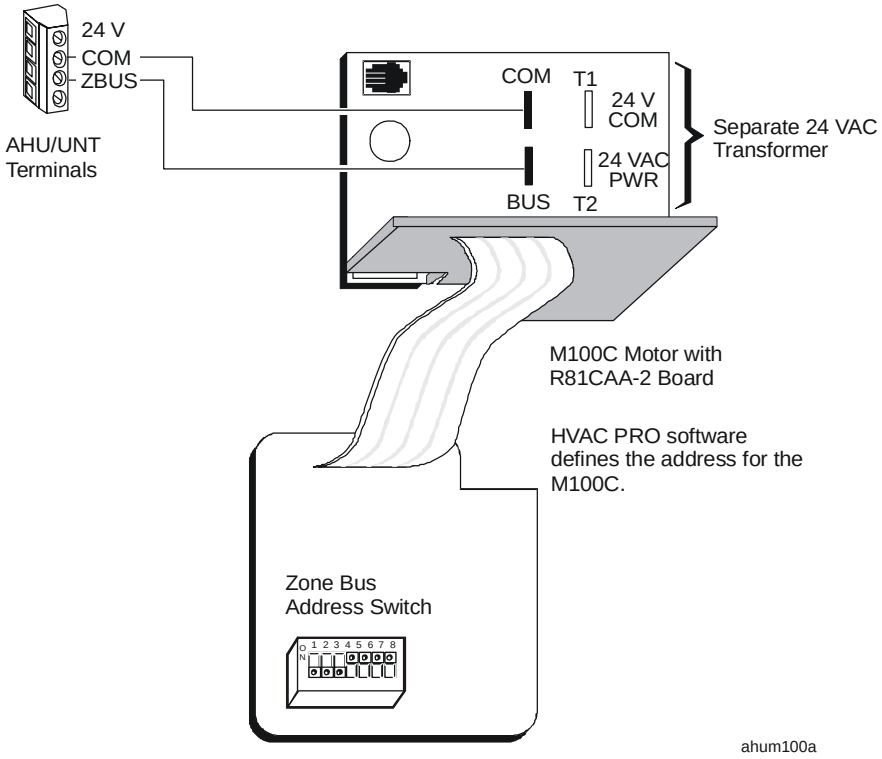

Figure 1: M100 Motor Zone Bus Connection Using R81CAA-2 Board

CAUTION: Risk of Property Damage.
Do not wire the 24 VAC power terminals on the ASC (AHU, UNT, VAV) to the M100C actuator. Connecting those terminals to the actuator may overload or permanently damage the supply power transformers.

When you connect an M100C actuator to the Zone Bus, its own 24 VAC transformer must power it. Each M100 requires an individual transformer. The only connections between the AHU/UNT/VAV and M100C are from the ZBUS and COM terminals of the AHU/UNT/VAV to the BUS and COM terminals in the M100C. A separate 24 VAC transformer is required to power the M100C. Refer to Figure 1 for terminal locations when wiring an M100 actuator.

Note: Zone Bus address switch settings are determined by the controller configuration. The Zone Bus address is set to match the address assigned in the HVAC PRO software.

Switch Settings

CAUTION: Risk of Electrical Shock.
Disconnect supply power to the M100C actuator before attempting to adjust the DIP-switch settings. Failure to disconnect the supply power may result in electrical shock.

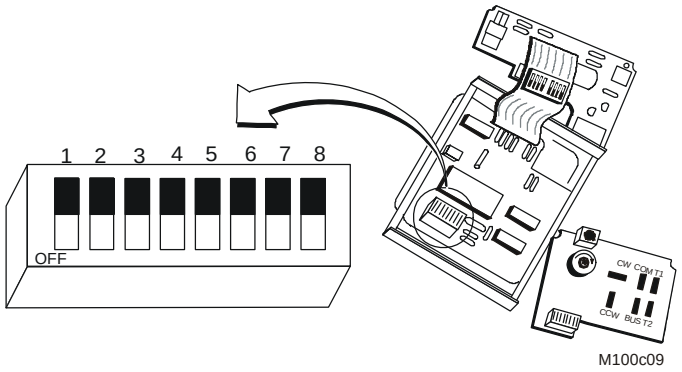

Figure 2: Digital Circuit Board

Make field adjustments using the 8-position DIP switch located on the cover-mounted circuit board as shown in Figure 2. The position of these switches specifies the operating parameters as shown in Table 1.

Table 1: Switch Settings

Switch Number	On Function	Off Function
1	Subordinate	Master
2	S-curve	Linear
3	Reverse Acting	Direct Acting
4	Zone Bus	L1 Bus (DSC 1000 product line)
5	Address Selection*	Address Selection*
6	Address Selection*	Address Selection*
7	Address Selection*	Address Selection*
8	Address Selection*	Address Selection*

* Refer to the *M100C Series Actuator with Digital Control Signal Input and R81CAA-2 Interface Board Installation Bulletin* (*LIT-2681113*) for complete address selection options.

Zone Bus

AHU/UNT/VAV controllers use the Zone Bus. Set Switch 4 to the On position to allow up to eight zone actuators to communicate with the AHU/UNT/VAV controllers.

Zone Bus Address Selection

An address is a numeric code that precedes a controller's command to a controlled device. The controlled device responds to only a command preceded by its assigned address code number.

The positioning of Switches 5, 6, 7, and 8 provides address information to the controller. The switches are each positioned such that the sum of their individual values provides the desired address value.

Configure multiple actuators with a separate address when each one performs a different function. When they all perform the same function, set one unit as the master, with the remaining units on that address set as Subordinates.

AHU/UNT/VAV Controller Zone Bus Address Selection

The Zone Bus addresses used by the AHU/UNT/VAV controller are 20 through 27. Make the address assignment during the HVAC PRO software configuration process for Analog Outputs (AOs). Refer to the *HVAC PRO User's Guide* for details.

CAUTION: Risk of Property Damage.
Do not connect any device to the phone jack on the M100C terminal board other than a laptop personal computer running HVAC PRO software using the CVTPRO or CBLPRO converter. Connecting any other device to the phone jack may damage the M100C or the connected device.



Figure 3: AHU/UNT/VAV Zone Bus Address Switch Settings

Table 2: AHU/UNT/VAV Address Switch Values

Switch Number	On Value	Off Value
5	0	—
6	0	4
7	0	2
8	0	1

For selection of Zone Bus, Switch 5 **must** be On and an additional value of 20 added to the total of the switch settings. For example, to select L1 Address 25, set Switches 6 and 8 Off and Switches 5 and 7 On (25 = 0 + 4 + 0 + 1 from the switch settings and +20 because of Zone Bus selection). Use the switches to select any Zone address between 20 and 27.

Specifications

Table 3: M100C Specifications

Feature	Specification
Product	M100C Motor Actuator
Power Requirements	24 VAC at 50/60 Hz, 25 VA spring return, 20 VA non-spring return
Rotation Timing	60 seconds for 160º travel 38 seconds for 90º travel
Ambient Operating Conditions	-40 to 52°C (-40 to 125°F), 90% RH non-spring return -37 to 52°C (-35 to 125°F), 90% RH spring return
Ambient Storage Conditions	-40 to 52°C (-40 to 125°F), 90% RH
Dimensions (H x W x D)	143 x 111 x 125 mm (5.64 x 4.38 x 4.94 in.)
Shipping Weight	4.1 kg (9 lb)
Enclosure	NEMA-1
Agency Compliance	FCC, UL, CSA
Agency Listing	UL Recognized File E27734 Guide XAPX2 CSA Certified Temperature Indicating and Regulating Equipment

The performance specifications are nominal and conform to acceptable industry standards. For application at conditions beyond these specifications, consult the local Johnson Controls office. Johnson Controls, Inc. shall not be liable for damages resulting from misapplication or misuse of its products.

AS-CBLPRO-2

The AS-CBLPRO-2 (Cable PRO) is an interface device for use between a computer running Configuration Tools software and Application Specific Controllers (ASCs) or Lab and Central Plant (LCPs) controllers. The DX-9100, TC-9100, XT-9100, XTM, and DT-9100 cannot connect with the Cable PRO. The Cable PRO is used for downloading, uploading, or commissioning a configuration via the Zone Bus communication port on the controller.

When used with a Zone Bus device, such as the ASC or Zone Terminal Unit (ZTU), the Cable PRO is strictly an electrical interface between the serial RS-232 port of the computer and the Zone Bus. The Cable PRO uses either a 6-pin to 8-pin cable or a 6-pin to 6-pin cable to connect to an AHU, VAV, and UNT. The Cable PRO operates on 24 VAC drawn from the controller over the wire used to make the Zone Bus connections. The data rate on both the RS-232 and the Zone Bus is 1200 baud.

A DB9 or DB25 connector supplied with the CBLPRO connects the RS-232 COM port of the computer to the CBLPRO unit. After connecting it, make sure the Cable PRO is 0.3 meters (1 foot) or more away from the computer monitor and system unit.

IMPORTANT: Do not position the Cable PRO near the computer monitor or other sources of electromagnetic noise. Electromagnetic noise may interfere with Cable PRO communications.

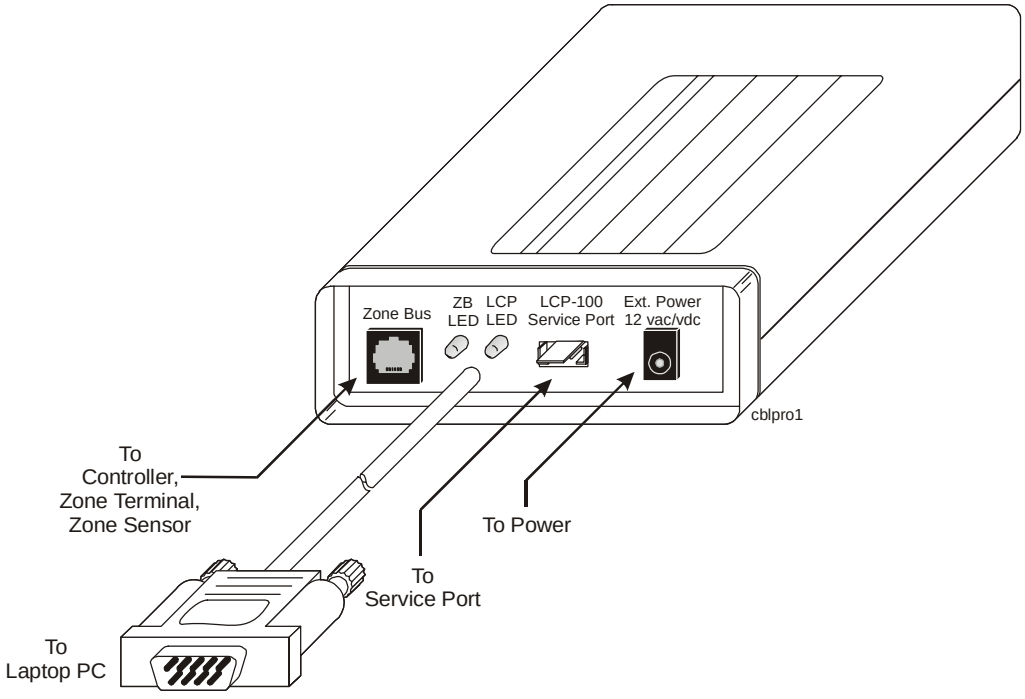

Figure 4: AS-CBLPRO-2

The AS-CBLPRO-2 (Figure 4) is an improved model of the original Cable PRO AS-CBLPRO-0, -1. AS-CBLPRO-2 has the following improvements:

- The laptop Personal Computer (PC) cable is permanently attached to the Cable PRO, making PC attachment more convenient.
- The unit has protection against earth ground faults that may be introduced into the system.
- A diagnostic Light-Emitting Diode (LED) indicates the status of communication of the Zone Bus. Descriptions of the LED are printed on the unit and summarized in Table 4.

Table 4: AS-CBLPRO-2 LEDs

ZB LED	LCP LED	Normal and Fault Conditions
2 Flashes per Second	Off	Connected to the Zone Bus Normal Communication.
Off	2 Flashes per Second	Connected to the LCP Normal Communication.
1 Flash per Second	Off	Connected to the Zone Bus via RS-232 Communication, **or** 24 VAC Shorted to Zone Bus.
5 Flashes per Second	5 Flashes per Second	24 VAC High Side Shorted to Earth Ground Note: Remove ground fault and cycle CBLPRO power to eliminate this fault condition.
On	Off	Controller Common Shorted to Zone Bus
Off	On	LCP Common Shorted to LCP Data Terminal **or** Interrupted Communication
Off	Off	No Power or No Connection to Active Zone Bus **or** No Power or No Communication for LCP

Note: With the VMA, the LEDs only flash when sending or receiving data.

Connections

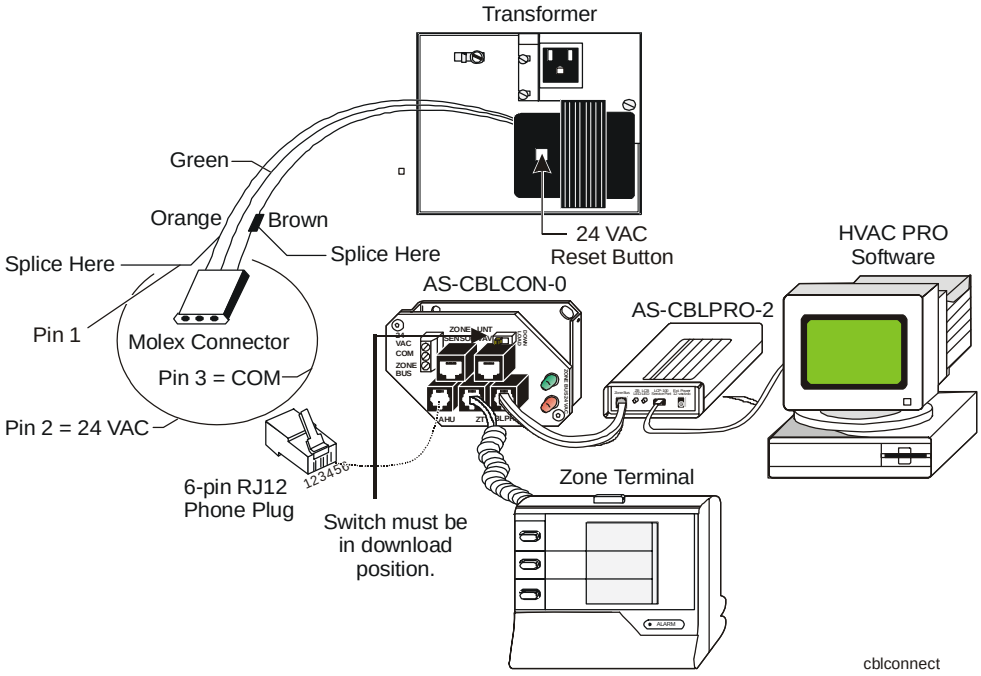

Figure 5: AS-CBLPRO-2 Connection Example

Specifications

Table 5: AS-CBLPRO-2 Specifications

Feature	Specification
Product	AS-CBLPRO-2
Power Requirements	24 VAC from controller
Ambient Operating Conditions	N/A (Test equipment only)
Ambient Storage Conditions	-18 to 50°C (0 to 120°F)
Dimensions (H x W x D)	33.2 x 94 x 159 mm (1.3 x 3.7 x 6.25 in.)
Shipping Weight	0.63 kg (1.38 lb)
Agency Compliance	N/A
Agency Listing	N/A

The performance specifications are nominal and conform to acceptable industry standards. For application at conditions beyond these specifications, consult the local Johnson Controls office. Johnson Controls, Inc. shall not be liable for damages resulting from misapplication or misuse of its products.

AS-CBLCON-0

The AS-CBLCON-0 Cable Connector (Figure 6) is a cable connecting device that accepts the different sizes of telephone cable connectors used with the controller products so that they are able to communicate. The AS-CBLCON-0 also monitors Zone Bus communications to the ASC or ZTU by the red and green Light-Emitting Diodes (LEDs) described in Table 6. The AS-CBLCON-0 has a terminal strip and a ZT download switch.

To download the ZTU, slide the switch on the AS-CBLCON-0 to the download position. The red LED indicates 24 VAC power. The green LED indicates Zone Bus transmissions from the controller. If the green LED is off, the Zone Bus wire is open. If this LED is on solid, the Zone Bus is shorted to Common. For details, refer to the *Zone Terminal Technical Bulletin (LIT-6363014).*

The AS-CBLCON-0 also extends the ZTU from 15.2 m (50 ft) to 154.2 m (500 ft) with 18 AWG wire size.

Table 6: AS-CBLCON-0 LEDs

Red LED: Power	Green LED: Comm	Cause
OFF	OFF	No power to controller
ON	OFF	Zone Bus wire open
ON	ON	Zone Bus wire shorted to Common or CBLCON-0 switch in download position
ON	Blinking	Normal communications

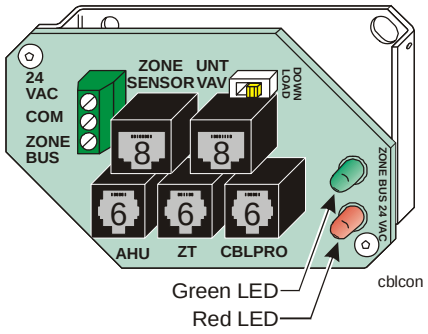

Figure 6: AS-CBLCON-0 LEDs

Connections

Figure 5 in the *Connection* section in *AS-CBLPRO-2* shows an example connection using the AS-CBLCON-0.

Specifications

Table 7: AS-CBLCON-0 Specifications

Feature	Specification
Product	AS-CBLCON-0
Power Requirements	N/A (No active circuits, only indicators.)
Ambient Operating Conditions	0 to 50°C (32 to 120°F)
Ambient Storage Conditions	-40 to 60°C (-40 to 140°F)
Dimensions (H x W x D)	31.8 x 47 x 73.7 mm (1.25 x 1.85 x 2.90 in.)
Shipping Weight	0.163 kg (0.36 lb)
Agency Compliance	N/A
Agency Listing	N/A

The performance specifications are nominal and conform to acceptable industry standards. For application at conditions beyond these specifications, consult the local Johnson Controls office. Johnson Controls, Inc. shall not be liable for damages resulting from misapplication or misuse of its products.

AS-CVTPROx00-1 Converter

The AS-CVTPROx00-1 Zone Bus/N2 Interface Converter is a portable converter designed to provide a communication interface between the room sensors and controllers operating on a Zone Bus or N2 Bus and a Personal Computer (PC) or specified models of the Palm™ family of Personal Digital Assistants (PDAs). See Table 9 for compatible Palm products. See Table 9 for compatible tools, Operating Systems (OSs) and controllers.

Note: The AS-CVTPROx00-1 converter can be used in place of the MM-CVT101-0 converter module. The MM-CVT101-0 converter is not compatible with Windows NT® OS, Windows® 2000 OS and later versions of Windows OSs.

For additional information on installing the AS-CVTPRO300-1 and ASCVTPRO400-1, refer to the *AS-CVTPRO300-1 and AS-CVTPRO400-1 Zone Bus/N2 Bus Interface Converters Installation Instructions (Part No. 24-10158-0)*.

Palm III and Palm VII products do not require any special cables or connectors to connect with the CVTPRO converter. See Table 9.

Palm V products require the Dock V PRO™ adapter, available from Solvepoint Corporation at www.palmdock.com and local retailers.

Palm m1xx and m5xx products require a null modem and cables (purchased separately) to connect with the CVTPRO converter. See Table 9.

The CVTPRO converter comes with four connection cables. There are two external power options available for N2 communication: 120 VAC to +3 VDC adapter (included with the North American CVTPRO converter version) and two AAA alkaline batteries (not included).

The CVTPRO converter is compatible with:

- TC-9102
- AHU
- VAV
- UNT1xx
- VMA12x0/14x0 Series
- UNT1100
- TMZ
- TE-6x00 sensor
- GX-9100 tool
- DX-9100
- XTM
- Network Dialer Module (NDM)

The CVTPRO converter works with VMA Balancing Tool (VBT) software for the VMA1200 and VMA1400; Windows 98, Windows NT, and Windows 2000 Operating Systems (OSs); and Palm OS® Version 2.x or later.

Note: The CVTPRO converter is not compatible with the ZTU.

For example, you can balance a VMA1400 Series controller in one of the following two ways:

- use a Palm handheld PDA running the VBT1400 software with a CVTPRO connected via the Zone Bus at the thermostat or the VMA1400 controller
- use a PC/laptop running HVAC PRO software with a CVTPRO converter connected via the N2 Bus to the controller or via the Zone Bus at the thermostat

Connection Ports and Light-Emitting Diode Indicators

The back of the CVTPRO converter (Figure 7) has ports for connections to a Personal Computer (PC), a Palm handheld PDA, an External Power Adapter, and a Zone Bus/N2 Bus RJ11 6-pin network cable phone plug.

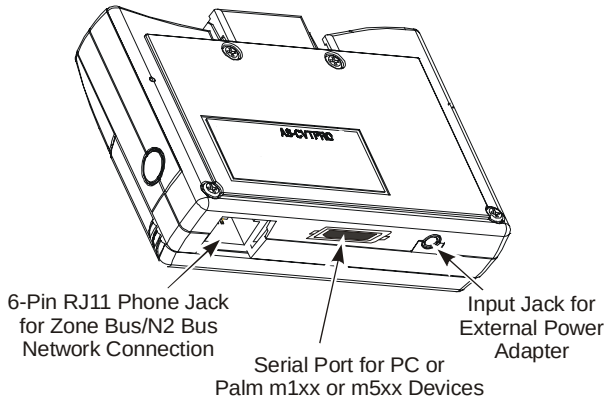

Figure 7: CVTPRO Converter Back

The front of the CVTPRO converter (Figure 8) shows the mating connector for a Palm III, Palm V adapter, or Palm VII product. Green and yellow Light-Emitting Diodes (LEDs) display the N2 communication status of the unit relative to the field device. The red LED shows power status.

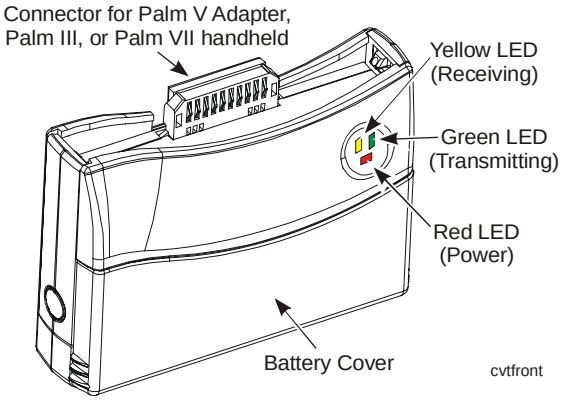

Figure 8: CVTPRO Converter Front

Cable Connections

Figure 9 shows the 6-pin phone plug end of the N2 cable used by the CVTPRO converter for N2 Bus communication. For Zone Bus communication, always use standard Zone Bus cables.

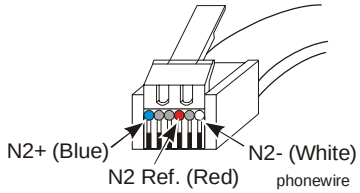

Figure 9: N2 Cable 6-Pin RJ11 Network Phone Plug

Pin	Signal
1	N2+
2	Zone Bus Power
3	GND
4	N2 Ref
5	Zone Bus Signal
6	N2-

n2zone

Figure 10: Zone Bus/N2 Bus RJ11 Network Phone-Jack Pin Designations

CAUTION: Risk of Property Damage

Do not apply power to the system before checking all wiring connections. Short circuited or improperly connected wires may result in permanent damage to the equipment.

Figure 11 is a diagram of the connections between the CVTPRO converter and other devices. Refer to Table 8 and Table 9 for more information on cables and Palm products. See Figure 12 and Figure 13 for more detail about N2 Bus connections.

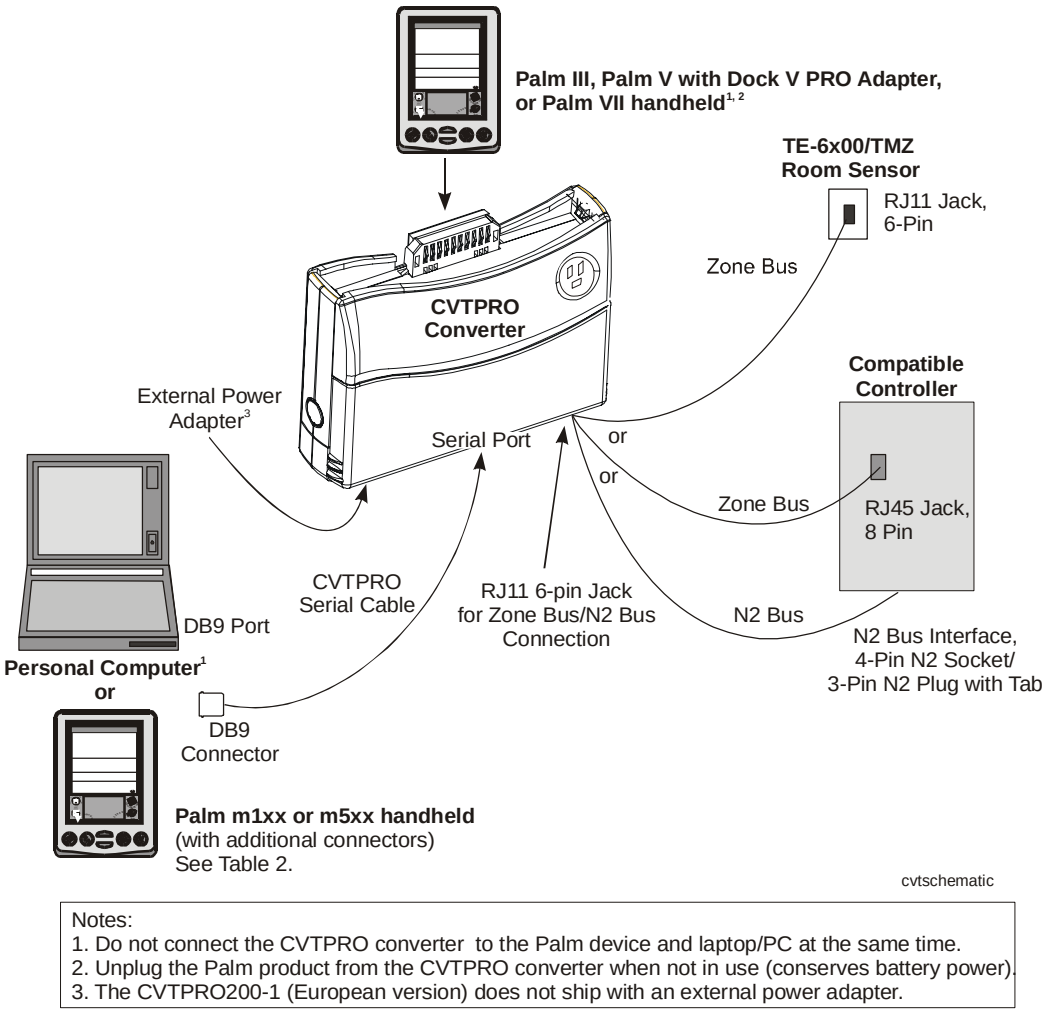

Notes:
1. Do not connect the CVTPRO converter to the Palm device and laptop/PC at the same time.
2. Unplug the Palm product from the CVTPRO converter when not in use (conserves battery power).
3. The CVTPRO200-1 (European version) does not ship with an external power adapter.

Figure 11: Overview of CVTPRO Converter Connections

Table 8: Cables Included with the CVTPRO Converter

To Connect the CVTPRO Converter To:	Use this Cable:
PC via RS232	CVTPRO serial cable (457 mm/18 in.)
Controller via the Zone Bus	8-pin RJ45 to 6-pin RJ11 phone cable (1.8 m/6 ft)
Controller via the N2 Bus	4-pin N2 socket/3-pin N2 plug to 6-pin RJ11 phone cable (1.8 m/6 ft) Note: Remove the 4-pin N2 socket from the cable and use the bare wires to connect to N2 screw terminal devices.
Controller Zone Bus (via TE-6x00/ TMZ sensor)	6-pin to 6-pin RJ11 phone cable (1.8 m/6 ft)

Table 9: Connections to Palm Products

To Connect the CVTPRO Converter To:	Use:	In This Sequence
Palm III and Palm VII Products	Nothing	Palm III/Palm VII ⇒ CVTPRO converter
Palm V Product	Dock V PRO Adapter[1]	Palm V ⇒ Dock V PRO Adapter ⇒ CVTPRO converter
Palm m100 and m105 Products	Palm HotSync® Cable[2] Null Modem Adapter[2] CVTPRO Serial Cable[3]	Palm m100/m105 ⇒ Palm HotSync Cable ⇒ null modem adapter ⇒ CVTPRO Serial Cable ⇒ CVTPRO converter
Palm m125, m130, and m5xx Products	Belkin® Serial Sync Cable[2] Null Modem Adapter [2] CVTPRO Serial Cable[3]	Palm m125/m130/m5xx ⇒ Belkin Serial Sync Cable ⇒ null modem adapter ⇒ CVTPRO Serial Cable ⇒ CVTPRO converter

1. The Dock V Pro adapter is available from Solvepoint Corporation at www.palmdock.com and local retailers.
2. See the *Ordering Information* section.
3. Included with the CVTPRO converter.

Connecting the CVTPRO Converter to a Controller with N2 Screw Terminals

To connect the CVTPRO to a controller with screw terminals (Figure 12):

1. Disconnect the three N2 wires from the controller screw terminals and temporarily isolate the individual bare wires with insulating tape.
2. Remove the 4-pin N2 socket from the CVTPRO N2 cable to expose the three wires (Figure 12 and Figure 13).
3. Connect the exposed N2+ (blue), N2- (white), and Ref (red) wires from the CVTPRO N2 cable to the controller screw terminals. Observe proper polarity.
4. Connect the 6-pin RJ11 phone plug on the opposite end of the CVTPRO N2 cable to the CVTPRO converter. (See Figure 9, Figure 10, and Figure 11.)

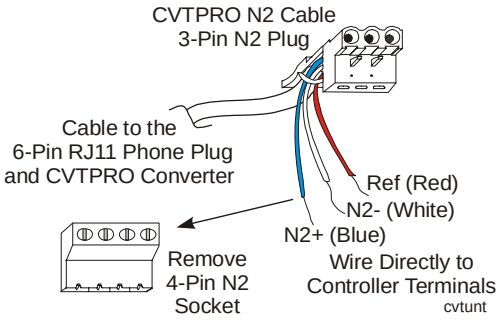

Figure 12: CVTPRO N2 Connection to Controllers with Screw Terminals

Connecting the CVTPRO Converter to a Controller with an N2 Jack

Note: Figure 13 shows the possible connections with a VMA (controller with a removable N2 plug).

To connect the CVTPRO converter to a controller with a removable N2 plug:

1. Remove the 3 or 4-pin N2 plug from the controller.
2. Plug the 3-pin plug CVTPRO N2 cable into the jack on the controller (The Variable Air Volume Modular Assembly [VMA] has 4-pin jack, and other N2 controllers have 3-pin jacks). Observe proper polarity (N2+ is blue, N2- is white, Ref is red).
3. Connect the 6-pin RJ11 phone plug on the opposite end of the CVTPRO N2 cable to the CVTPRO converter. (See Figure 9.)

To scan the N2 Bus:

1. Disconnect the N2 Bus from the N2 master controller.
2. Remove the N2 plug (with attached N2 wires) from the controller (4-pin plug on the VMA and 3-pin plug on other controllers).
3. Connect the 3-pin or 4-pin N2 plug that was disconnected from the controller in Step 2, to the 4-pin N2 socket on the CVTPRO converter cable. (See Figure 7.) Observe proper polarity (N2+ is blue, N2- is white, Ref is red).
4. Connect the 6-pin RJ11 phone plug on the opposite end of the CVTPRO N2 cable to the CVTPRO converter. (See Figure 9, and Figure 11.)

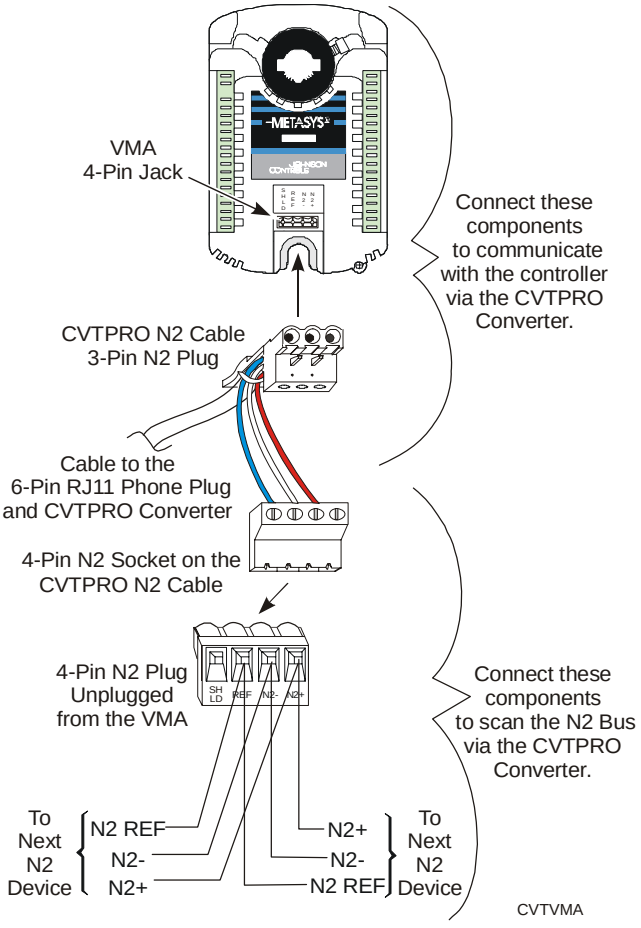

Figure 13: CVTPRO N2 Connection to a VMA with Removable N2 Plugs

Compatibility

Table 10 lists compatible tools, OSs, and controllers used over the Zone Bus and N2 Bus with the CVTPRO converter.

Table 10: Compatibility Chart

Tool	Bus	Operating System	Compatible Controller
HVAC PRO Software (part of M-Tool Release 5.0 or later)	N2 Bus	Windows 98 SE/Windows NT[1]/ Windows 2000 PE[2] OS	AHU1xx UNT1xx UNT11xx VAV1xx VMA14x0
	Zone Bus	Windows 98 SE/Windows 2000 PE[2, 3] OS	
	Zone Bus	Windows NT[1]	VMA14x0*
VBT1400	Zone Bus	Palm Personal Digital Assistant (PDA) with OS Version 3.5 or later	VMA14x0
VBT1200	Zone Bus	Palm PDA with OS Version 2.x or later	VMA12x0
GX-9100 Software Configuration Tool (part of M-Tool Release 5.0 or later)	N2 Bus	Windows 98 SE/Windows NT[1]/ Windows 2000 PE[2] OS	DT-9100 DX-9100 XT9100 (XP91xx) XTM-905 (XPx-xxx)
XTM Configuration Tool	N2 Bus	Windows 98 SE[1]/Windows NT[1]/ Windows 2000 PE[2] OS	XTM-105 (XPx-xxx)
NDM Configuration Tool	N2 Bus	Windows 98 SE/ Windows NT[1]/ Windows 2000 PE[2] OS	NDM

Note: The CVTPRO converter is not compatible with Zone Terminal Units (ZTUs). For ZTUs, use the CBLPRO-2 converter.

1. For proper CVTPRO converter operation when running on Windows NT OSs, Service Pack 6 must be installed.
2. For proper CVTPRO converter operation when running on Windows 2000 OSs, use the Professional Edition (PE) only, and Service Pack 2 must be installed.
3. On Zone Bus applications running on Windows 2000 OSs, HVAC PRO Version 8.04B or later must also be installed.

* When using the VMA14x0 with HVAC PRO software (versions prior to Version 8.04B only) over the Zone Bus with Windows NT OS, a Device Conflict box appears whenever the user attempts an operation (for example, upload or download). To bypass the box, select Yes or No and the box disappears. The selected operation continues as expected.

Battery Power Recommendations

The CVTPRO converter requires two (user-supplied) AAA alkaline type batteries on N2 Bus applications (when the External Power Adapter is not used). Battery life varies depending on the N2 Bus load, ambient temperature and type of batteries. See Table 11 and observe the following guidelines:

- Always have a spare set of new batteries on hand.
- When performing long downloads with the CVTPRO converter, use the External Power Adapter instead of batteries.

Table 11: *Typical Battery Life in CVTPRO Converter

AAA Battery: Manufacturer and Model/Type	Battery Life
Rayovac® Industrial Plus battery	4-1/2 hours
Duracell® Coppertop battery	5-1/2 hours
Eveready® Energizer Max® battery	6-1/2 hours

* Using a CVTPRO converter in continuous operation on a fully loaded N2 Bus at room temperature (21°C [70°F]).

Specifications

Table 12: AS-CVTPROx00-1 Specifications

Product	AS-CVTPROx00-1 Zone Bus/N2 Bus Interface Converter AS-CVTPRO100-1 with 120VAC/3VDC External Power Adapter (North American version) AS-CVTPRO200-1 without power adapter (European version)
Power Requirements	**Zone Bus:** Controller Supplied Power: Stand-alone or via Thermostat - 24 VAC or VMA applications - 15 VDC **N2 Bus:** External Power Adapter: 120 VAC to +3 VDC 200 mA Class 2 Transformer (Included with CVTPRO Converter in North America only) or Battery Power: Two type AAA Alkaline, not included; see Table 5.
Agency Listings	FCC Part 15m Subpart B, Class A CE Mark: EN50081-2 (Electromagnetic Compatibility, EN55011, Class A) EN50082-2 (Electromagnetic Compatibility, EN61000-3-2 and EN61000-3-3)
Ambient Operating Conditions	0 to 50°C (32 to 122°F) 20-80% RH (Relative Humidity) 30°C (86°F) Maximum Dew Point
Ambient Storage Conditions	-40 to +60°C (-40 to 140°F) 5-95% RH 30°C (86°F) Maximum Dew Point
Shipping Weight	0.227 kg (0.5 lb.)

The performance specifications are nominal and conform to acceptable industry standards. For application at conditions beyond these specifications, consult the local Johnson Controls office. Johnson Controls, Inc. shall not be liable for damages resulting from misapplication or misuse of its products.

Function Module Kit (FMK) AS-FMK102-0

The FMK provides the enclosure and termination board to connect up to four, single-slot function modules to the AHU.

Mounting Considerations

Two different mounting position options (UPM or perpendicular) are available when installing the FMK102 Function Module Kit. Built-in screw holes are provided for mounting the unit in the angled position. These holes are compatible with the Universal Packaging Module (UPM) enclosure. Use perpendicular mounting when replacing the FMK100 or in confined areas.

Note: Versions previous to the FMK102 are not supported in the UPM.

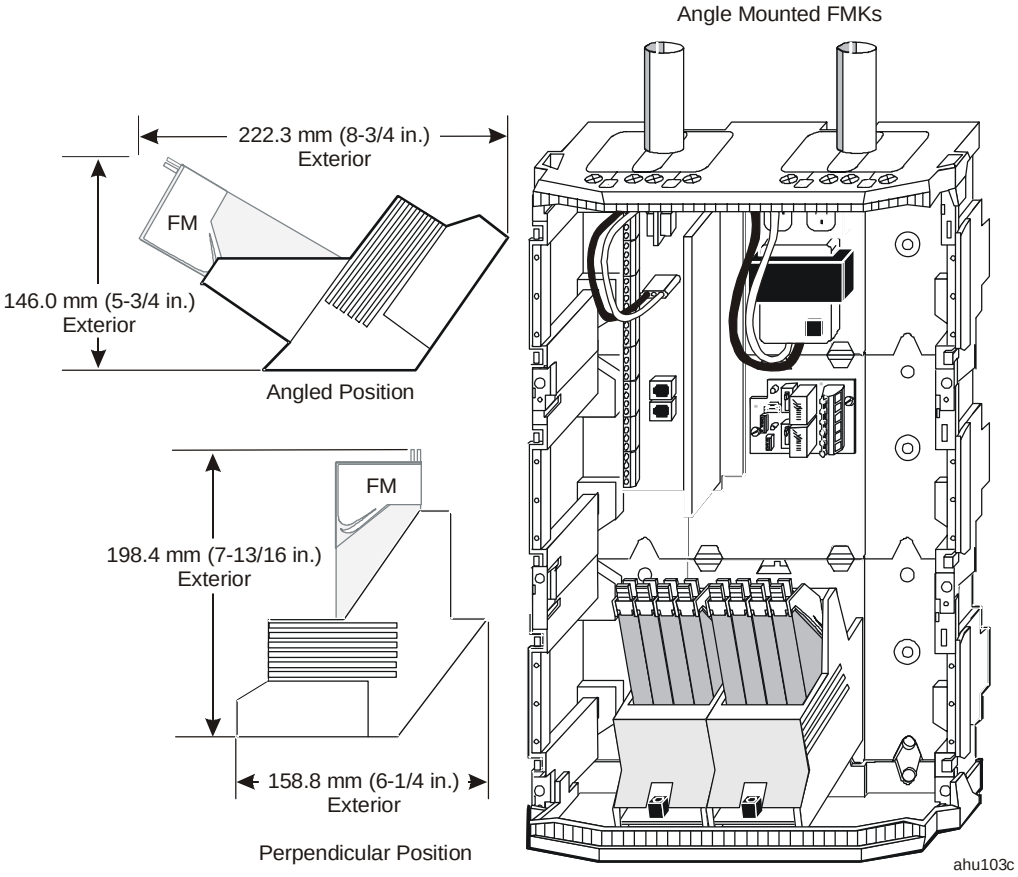

Figure 14: FMK Mounted in AHU103

For instructions on installing an FMK102 into the UPM or mounting in the horizontal position, see *Detailed Procedures*.

Function Modules (FMs)

The types of FMs provided for use in the FM kit are:

- Input: The input FMs consist of the Input Analog Pneumatic (FM-IAP) and various models of the Input Differential Pressure (FM-IDP) modules. Each occupies one slot in the FM kit.
- Output: The output FM (FM-OAP) has the same dimensions as the input FMs except it has twice the width. Therefore, the output FM occupies two slots in the FM kit. An FM-OAP102 Pneumatic Manual Module must be ordered with each FM-OAP103 Electronic Module.

Perpendicular Mounting and FMK100 Replacement

The FMK102 cannot be mounted on a DIN rail. Therefore, when you replace a DIN rail-mounted FMK100, you must remove the DIN rail or install 1/4-in. mounting spacers so the FMK102 clears the DIN rail.

Refer to Figure 33 and follow the steps in *Detailed Procedures* when mounting an FMK102.

Wiring Considerations (AS-FMK102-0)

Refer to Figure 15 for terminal locations when using two FM-OAP103-0s with the FMK. The FM-OAP 103-0 must use adjacent Slots A-B or C-D in the FMK-102-0.

Note: Do not insert the FM-OAP 102/103 module into the two middle slots (B and C) of the FMK. Refer to Table 8 for slot allocation. Either:

- hardwire the FMK termination block Terminal B of the FMK for the top Output Analog Pneumatic (OAP) module and hardwire terminal block Terminal D on the FMK for the bottom OAP

or

- use the 0.9 m (3 ft) AS-CBL100-0 Quick Connect Cable to connect consecutive AOs (for example, AO1 and AO2) to both FM-OAP103-0 transducers by connecting the center connector (J3) on the FMK

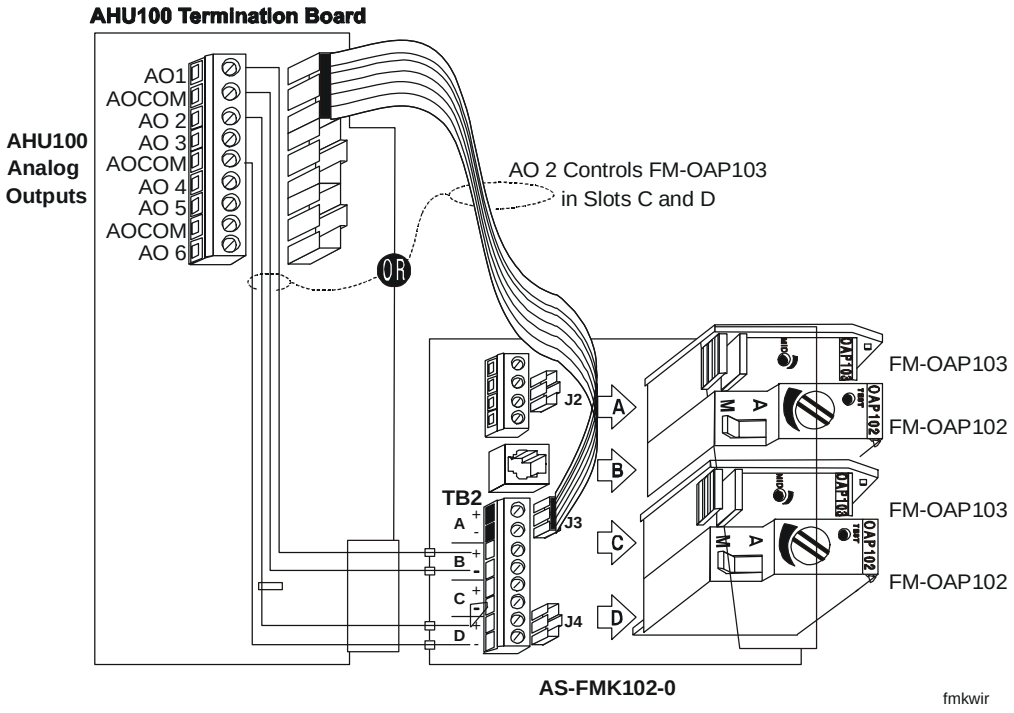

Figure 15: AO1/AO2 Controlling Two FM-OAP103 Function Modules

Refer to Figure 16 for terminal locations when using one FM-OAP-103/102 with the FMK. Refer to Table 13 for slot allocation. Either:

- hardwire from the AS-AHU100 Analog Output Terminal Block. If the FM-OAP103/102 is installed in the top half (Slot AB) of the FMK, use Terminals B+ and B- on the FMK. Use Terminals D+ and D- if the FM-OAP103/102 is installed in the bottom half (Slot CD) of the FMK. The B+ or D+ connect to AO-n. The B- or D- connects to AOCOM.

or

- use an AS-CBL100 Quick Connect Cable to connect the odd numbered AOs to the top quick connector (J2) of the FMK with the FM-OAP103/102 in Slots A and B. The next even numbered analog output is available for termination elsewhere. Use the bottom quick connector (J4) of the FMK with the FM-OAP in Slots C and D for even numbered AOs. The previous odd numbered analog output is available for termination elsewhere. For example, if you plug a CBL100 into AO3 and AO4, and into J4 of the FMK, then AO4 controls the OAP in Slot C and D. AO3 is available for hardwiring to another device.

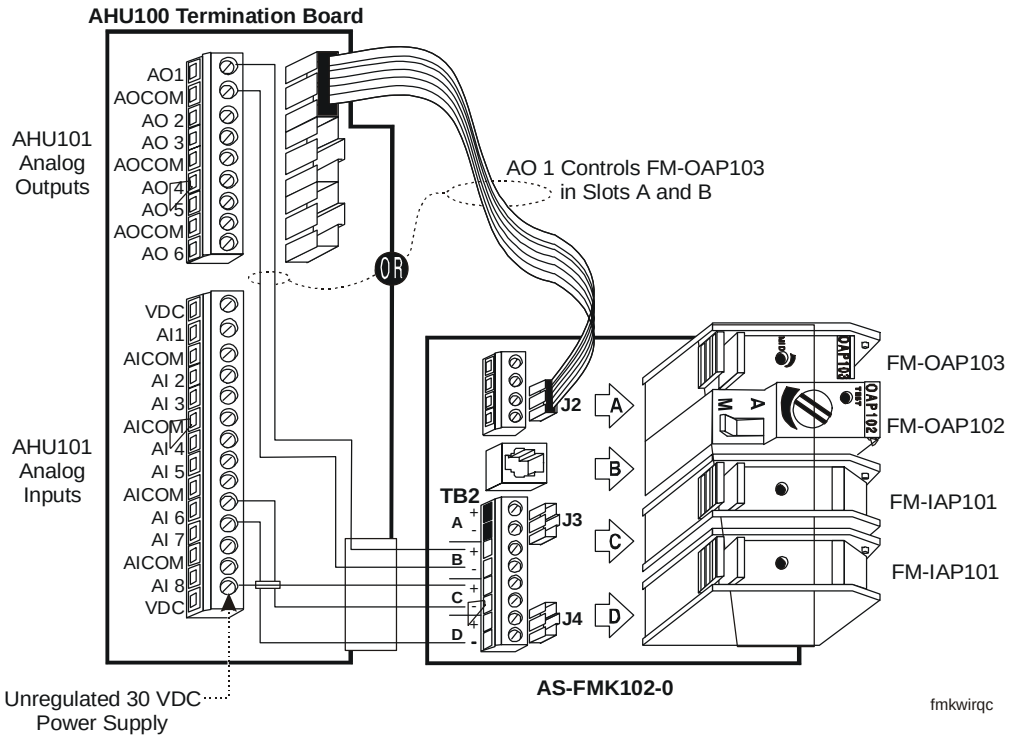

Figure 16: Single AO Controlling FM-OAP103/102 with AS-CBL100 and Hardwired Input Function Modules

CAUTION: Risk of Property Damage
The **VDC** terminals on the AS-AHU100 must be connected to a positive (+) terminal corresponding to the FMK slot holding the function module. DC supply power is polarity-specific and reversing this connection may permanently damage the AS-AHU100.

IMPORTANT: When using FM-IDP or FM-IAP Modules, be sure to install the current (C) jumper for the Analog Input (AI) if appropriate. Failure to install the jumper for the AI with a current input results in the AS-AHU102 continually resetting.

Wiring Input (FM-IAP and FM-IDP) Modules

Refer to Figure 17 for terminal locations when wiring input modules.

Wire from the +VDC terminal on the AHU controller board to the A+, B+, C+, or D+ terminal on the FMK. All four terminals are connected electrically on the FMK. Wire from each AI terminal on the controller board to the A-, B-, C-, or D- terminal on the FMK. Set the AI jumper on the AHU102 board to the current (C) position. One +VDC wire is sufficient per FMK, but it must be run in the same bundle as the AI wires and be large enough to carry current for all four inputs (80 mA maximum).

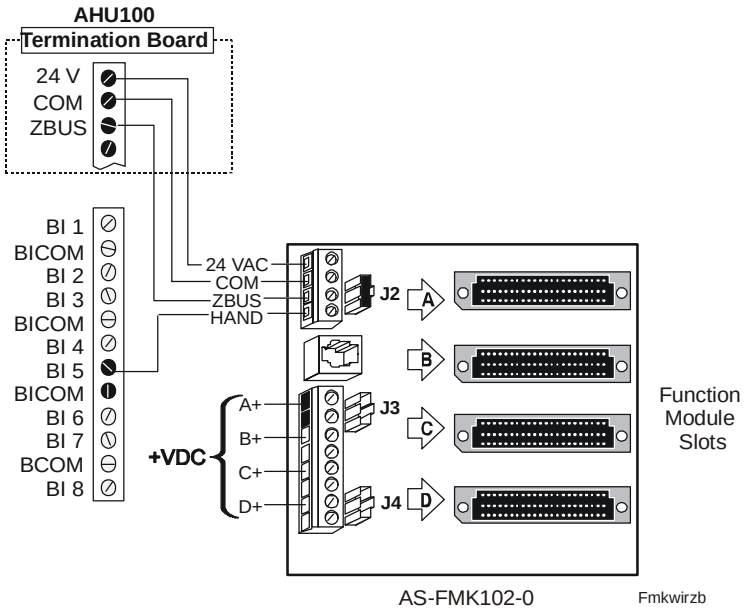

Figure 17: Zone Bus Connection with Manual Override Status Indication

Wire the 24 V, COM, and ZBUS terminals from the AHU100 to the FMK102 to connect the Zone Bus from the AHU controller to the FMK102. You can use this common for the Hand/Manual Override Indicator Common.

The Hand/Manual Override Binary Indicator can be connected to a Binary Input (BI) and BICOM on the AHU controller board.

Refer to Figure 17 for terminal locations when monitoring Auto-Manual switch status.

Hardwire the Hand terminal on the FMK102 to a BI point on the AHU100 controller board. Hardwire from COM on the FMK102 to COM on the AHU100 if you use the Zone Bus. Hardwire COM on the FMK102 to BICOM on the AHU100 controller board if you do not use the Zone Bus.

Note: Refer to Table 13 for complete wiring information.

Application Examples

In Figure 18 the AHU AI-1 connects to FMK connector CD for IDP Function Module. Likewise, AI-2 connects to the IAP Function Module in Slot D with the same CBL100.

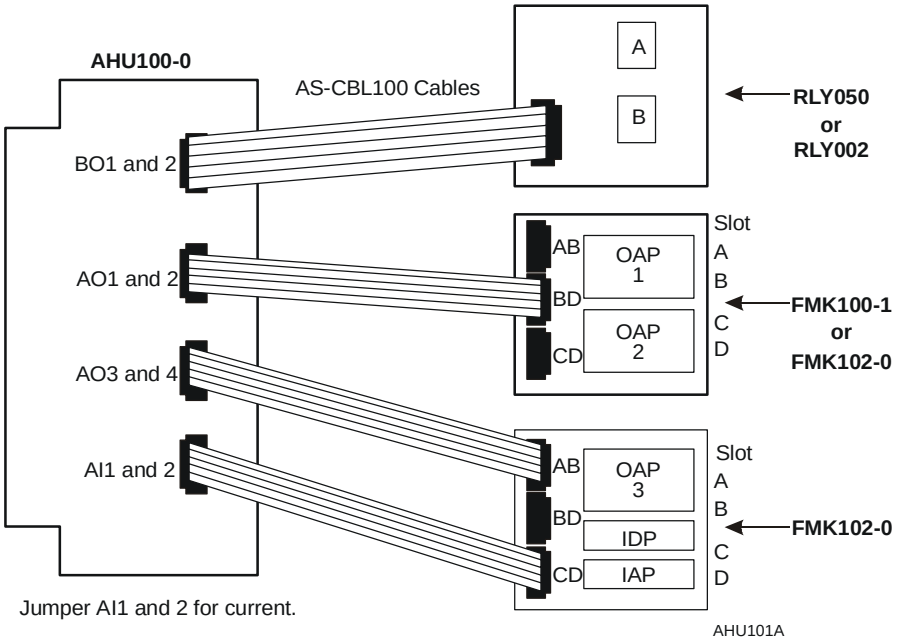

Figure 18: Application Example - Interconnect of AHU100-0 to FMK102-1

CBL100 Rules for Wiring the AHU to FMK102

Table 13 lists the general rules to remember when wiring the AHU to the FMK102.

Table 13: General Rules for AHU to FMK102 Wiring

Function Module	Function Module Slot	FMK Cable 100 Connector	AHU Point
IDP/IAP	A	AB (J2)	AI Even
IDP/IAP	B		AI Odd
IDP/IAP	C	CD (J4)	AI Odd
IDP/IAP	D		AI Even
OAP103	AB	AB (J2)	AO Odd*
OAP103	AB	BD (J3)	AO Odd
OAP103	CD		AO Even
OAP103	CD	CD (J4)	AO Even*

* You can separately hardwire the other output to another device.

Pneumatic Connection

For complete information on installing pneumatic function modules, refer to the *FM-OAP101/102/103 Series Output Analog Pneumatic Function Modules Technical Bulletin (LIT-636045).*

Specifications

Table 14: AS-FMK102-0 Specifications

Feature	Specification
Product	AS-FMK102-0
Power Requirements	None (supplied by controller)
Ambient Operating Conditions	0 to 50°C (32 to 122°F)
Ambient Storage Conditions	40 to 70°C (-40 to 104°F)
Dimensions (H x W x D)	146 x 114 x 156 mm (5.75 x 4.5 x 6.13 in.)
Shipping Weight	.907 kg (2 lb)
Agency Compliance	UL 916, UL 864, CSA C22.2-205
Agency Listing	UL Listed and CSA Certified as part of the Metasys® Network.

The performance specifications are nominal and conform to acceptable industry standards. For application at conditions beyond these specifications, consult the local Johnson Controls office. Johnson Controls, Inc. shall not be liable for damages resulting from misapplication or misuse of its products.

MM-CVT101-0

Note: The AS-CVTPROx00-1 converter can be used in place of the MM-CVT101-0 converter module. The MM-CVT101-0 converter is not compatible with Windows NT OS, Windows 2000 OS, and later versions of Windows OSs.

Because PC serial ports use RS-232 signals and the N2 Bus uses RS-485 signals, it is necessary to connect a converter module between the serial port and the ASC, DX-9100, TC-9102, XTM, or XT-9100. The MM-CVT101-0 (in Europe, IU-9100) is the device that converts RS-232 to RS-485 for the N2 Bus. It connects a Facilitator/Companion system PC Version or a PC with the Configuration Tools directly to the N2 Bus. This allows downloading, uploading, and commissioning of an ASC, DX-9100, TC-9102, XTM, or XT-9100 via the N2 Bus.

In addition, the End-of-Line (EOL) termination jumpers for the PC Version Companion system are located in the MM-CVT101-0 N2 Bus converter. To set the PC as the terminating device as required for the Companion system or for the second N2 Bus on a Network Control Module (NCM), set the jumpers to In by placing them on Pins 1 and 2 of W1 and W2. To set the PC as the non-terminating device, set the jumpers to Out by placing them on Pins 2 and 3 of W1 and W2. Refer to Figure 20 for the MM-CVT101-0 components.

The MM-CVT101 converter has a 25-pin female connector on the body of the converter that plugs-into a 25-pin serial port on the PC directly. PCs with only 9-pin serial ports require a 9-pin female to 25-pin male straight through cable (or converter plug) between the serial port and the MM-CVT101.

Note: If you are using Windows NT software with HVAC PRO software, see the *MM-CVT101-0 with Windows NT Software and HVAC PRO Software* section.

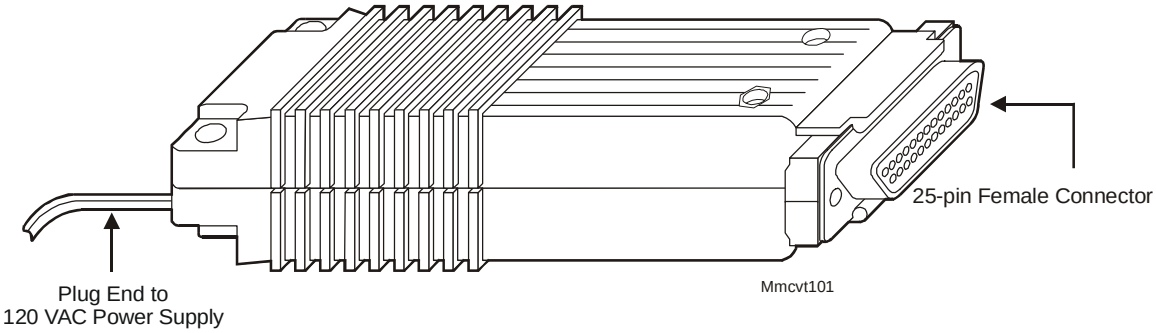

Figure 19: MM-CVT101

Note: To use the MM-CVT101-0 with LCPs, requires a jumper between Pins 20 and 22.

Refer to Figure 20 for illustration of the following:

- J1: Jumpers for changing the transmit/receive communication of Pins 2 and 3 on the 25-pin Electronic Industries Association (EIA) female connector
- P1: 25-pin female connector for connection to a PC (via cable or direct)
- P2: Screw terminal for trunk connections
- P3: Screw terminal for power connections
- W1: Jumper (1) for EOL termination (In/Out)
- W2: Jumper (1) for EOL termination (In/Out)

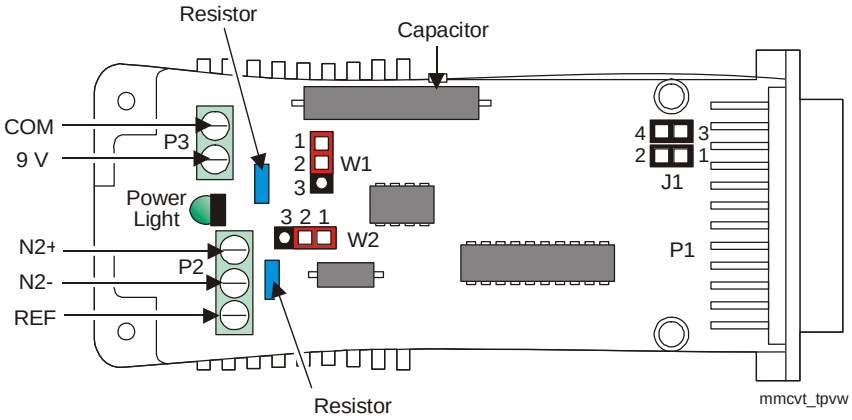

Figure 20: MM-CVT101-0 Components

Connection for Download and Upload

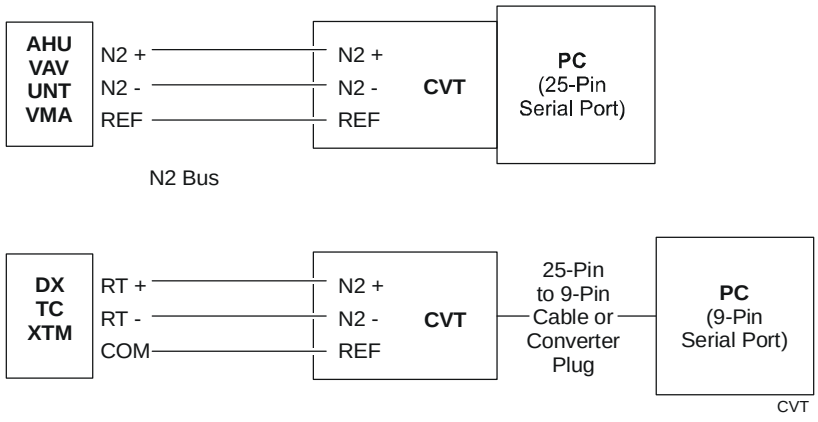

Figure 21: MM-CVT101-0 Connections

MM-CVT101-0 with Windows NT Software and HVAC PRO Software

HVAC PRO software (Release 7.03 or later) running on Windows NT operating system does not support the MM-CVT101 converter for direct connections to the N2 Bus.

Windows NT software does not create the proper Request to Send (RTS) signal for Johnson Controls devices. Without the proper RTS signal, N2 Bus communication is not established and downloading fails.

Solution: B & B Converter

Replace the MM-CVT101-0 converter with the B & B Electronics converter and power supply shown in Table 15. These parts are available from:

B & B Electronics
707 Dayton Rd.
P.O. Box 1040
Ottawa, IL 61350
Phone: (815) 433-5100

www.bb-elec.com

See the footnote under Table 15 for special ordering instructions.

Table 15: B & B Electronics Products and Model Numbers

B & B Electronics Product	Model Number
RS-232 to RS-485 Converter	485TBLED*
RS-232 to RS-485 Power Supply for Converter	485PS2

* N2 devices require a faster converter turnaround time. Resistor R9 must be changed from the standard 100 K ohm to a 68 K ohm, 1%, 1/8 watt resistor. B & B Electronics provides the change for a $15 charge. Request a “modification line item: change R9 to a 68 K ohm, 1% resistor” when placing your order.

The B & B converter uses the same cable as the MM-CVT101 to connect to the PC. The B & B converter has two jumpers (see Figure 34). Several changes are required for use with Johnson Controls N2 devices. The B & B converter has separate connections for the transmitting and the receiving N2 lines (see Figure 34). These connections must be connected together to provide a 3-wire communication trunk.

See *Detailed Procedures* for information on setting up the B & B 485TBLED converter for use with Johnson Controls N2 devices.

Specifications

Table 16: MM-CVT101-0 Specifications

Feature	Specification
Product	MM-CVT101-0 RS-232 to RS-485 Protocol Converter
Power Requirements	9 VDC transformer that plugs into a 120 VAC wall outlet
Ambient Operating Conditions	0 to 50°C (32 to 120°F) 10 to 90 % noncondensing relative humidity
Ambient Storage Conditions	-40 to 70°C (-40 to 158°F)
Dimensions (H x W x D)	25.4 x 53.3 x 114 mm (1.0 x 2.1 x 4.5 in.)
Shipping Weight	0.54 kg (1.2 lb)

The performance specifications are nominal and conform to acceptable industry standards. For application at conditions beyond these specifications, consult the local Johnson Controls office. Johnson Controls, Inc. shall not be liable for damages resulting from misapplication or misuse of its products.

Relays

The relay module is a self-contained relay device that provides an interface between the 24 VAC, low-voltage (input) Triac circuitry and the 240 VAC 5-ampere line-voltage (output) devices. These relays are used when the Triac output is not compatible with the device or the device exceeds the load rating of the Triac.

AS-RLY050-0 AS-RLY100-1

The AS-RLY050-0 and AS-RLY100-1 are primarily used with ASCs or in applications that require a metal relay enclosure. AS-RLY050-0 has two 24 VAC relays. AS-RLY100-1 has four 24 VAC relays. Both come with enclosures.

AS-RLY002-0

The AS-RLY002-0 is the same relay module used in the AS-RLY050-0 and AS-RLY100-1. You can use the AS-RLY002-0 as a replacement board for either of these modules. The AS-RLY002-0 has two 24 VAC relays.

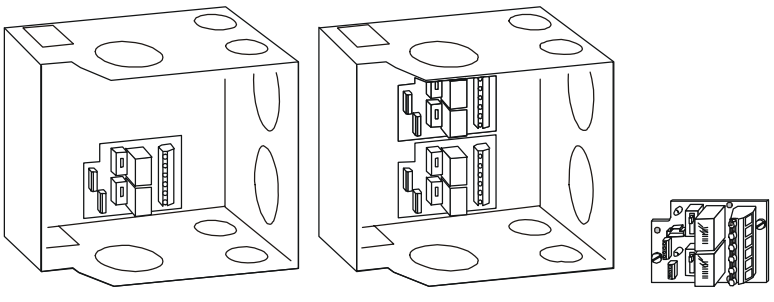

Figure 22: Relay (RLY) Modules

Position the relay module remotely next to the line-voltage device on the DIN rail. The enclosure can be mounted with DIN rail or directly mounted to a wall. The enclosure supports multiple 3/4 in. and 1-1/2 in. conduit connections.

Remote Relay Enclosure

Position the Remote Relay Enclosure (RLY050/100) as close as possible to the devices it operates. The Remote Relay Enclosure measures 173 x 186 x 124 mm (6.8 x 7.3 x 4.9 in.).

Wiring the Relays (AS-RLY050-0) (AS-RLY100-1) (AS-RLY002-0)

WARNING: Risk of Electrical Shock.
Disconnect each of multiple power sources before making electrical connections. More than one disconnect may be required to completely de-energize equipment and relays. Contact with components carrying hazardous voltage can cause electrical shock and may result in severe personal injury or death.

Refer to Figure 14 when wiring an AS-RLY002-0. To ensure separation of line and control wiring, route all low-voltage wiring from the controller on the left-hand side of the UPM and route all line-voltage wiring to the right-hand side as shown in Figure 23. Connect control and binary feedback wires according to the examples in Figure 24. For ease of wiring, use the AS-CBL100-0 with the AHU when the AHU is within 3 feet of the relay.

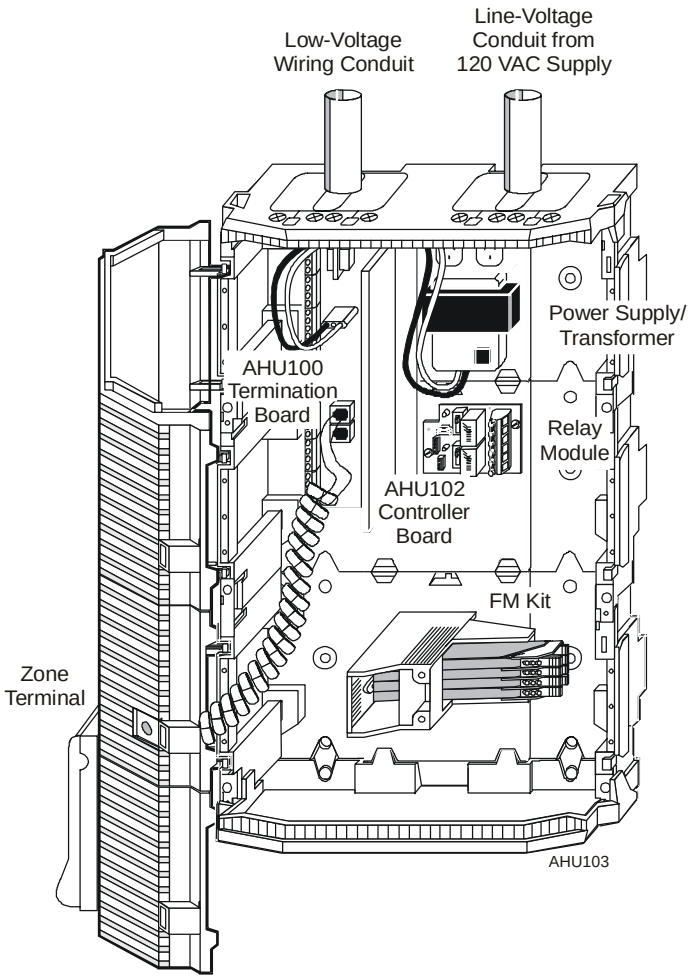

Figure 23: Low-Voltage and Line-Voltage Wiring

Table 17 and Table 18 describe the relay terminals for low-voltage and line-voltage wiring.

Table 17: Wiring Terminals-Low-Voltage

Relay Terminal	Description
A or C	Relay control, switched 24 VAC from Binary Output (BO) (odd number BO using CBL100)
B or D	Relay control, switched 24 VAC from Binary Output (even number BO using CBL100)
Coils	Relay coil supply, connected to both relay coils (typically 24 VAC)
Triacs	Triac voltage common, used to energize Relay in Hand switch position
Hand	Binary contact feedback, closed indicates when HOA relay switch is in the Hand position
Off	Binary contact feedback, closed indicates when either HOA switch is in the Off position
HOA Com	Binary Input common for Hand/Off feedback

Table 18: Wiring Terminals-Line-Voltage (240 VAC 5-Ampere Maximum)

Relay Terminal	Description
COM	Common Relay Contact
NC	Normally Closed Relay Contact
NO	Normally Open Contact

AHU Relay Wiring Examples

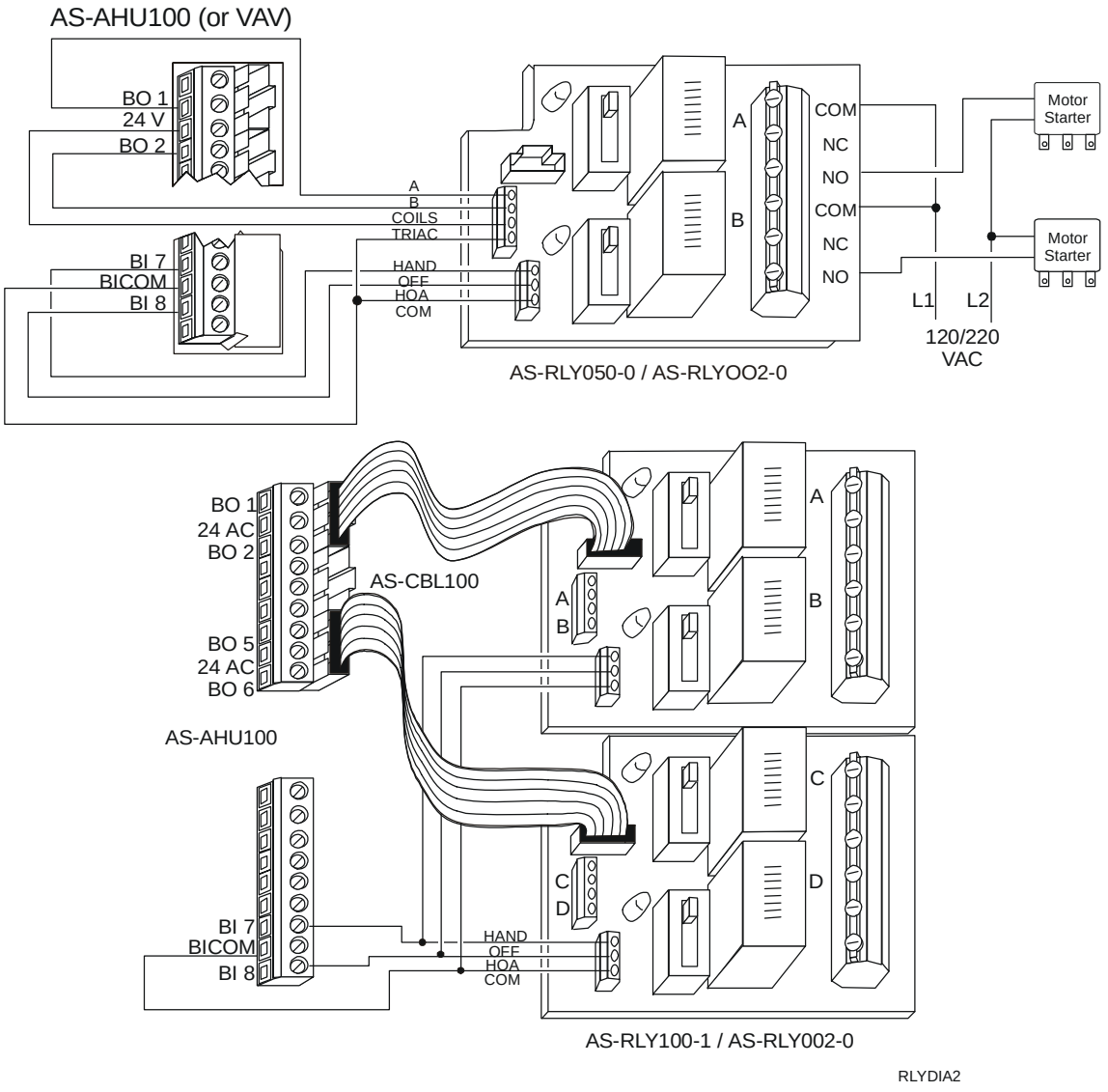

Figure 24: Relay Wiring Examples

Connect power to the relay module and the transformer through the conduit knockouts in each box. Wire the module according to the following diagrams.

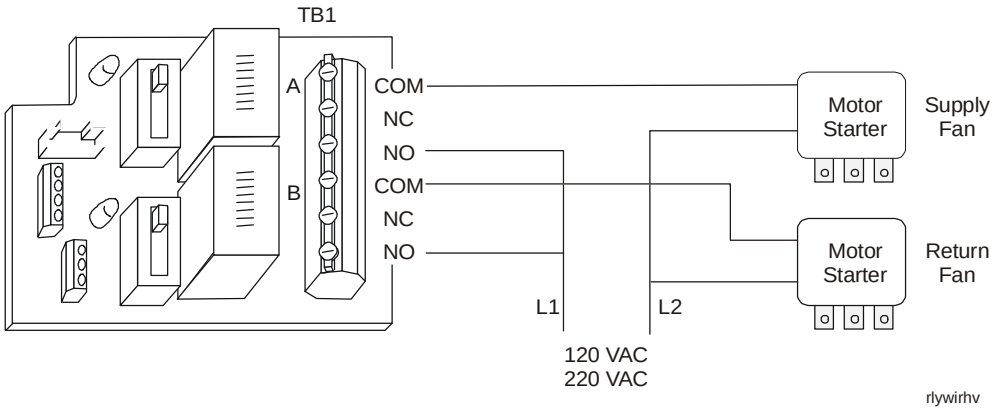

Figure 25: Starter Interlock Wiring Example

IMPORTANT: Relay chatter may be experienced when using binary output relays that are not manufactured by Johnson Controls. The chatter is a result of a low load current through the binary output Triac. The relay chatter is audible and arcing may be visible at the contacts.

The minimum holding current for the Triac is 50 mA. The maximum Triac current is 500 mA. To eliminate relay chatter, use a 360-ohm, 5-watt resistor across the binary output (or use the AS-RLY100 Relay Kit).

There have been a few instances where loads have met the 50 mA minimum current requirement, but the relay still chattered. The known exceptions where this may appear are Honeywell® damper actuator (Model MC6161) and Finder™ relay (Model 60.12). In these instances, use a 1 K ohm, 2-watt resistor in parallel with the load.

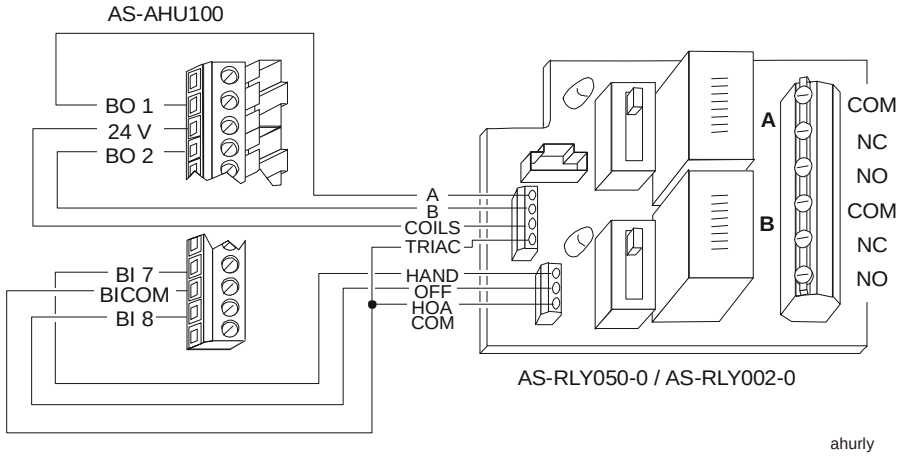

Figure 26: Wiring Example–AHU to RLY050 or RLY002

Keep the following points in mind while wiring relays.

Separate low-voltage and line-voltage wires, with line-voltage wires on the right.

Hand operation using the HOA switch requires 24 VAC to the COILS terminal and COM to the TRIAC terminal to energize the relay.

The Hand or Off position signals the binary input connected to those terminals. These switches can be hardwired **or** connected to one BI. This switch uses the HOA COM terminal, which is isolated from the relays.

Obtain a Double-Pole, Double-Throw (DPDT) relay configuration by connecting the BO signal to two terminals on the Relay Kit terminal block (for example, B and C).

To supply a Zone Bus jack at a remote RLY kit, add an AS-CBLCON-0.

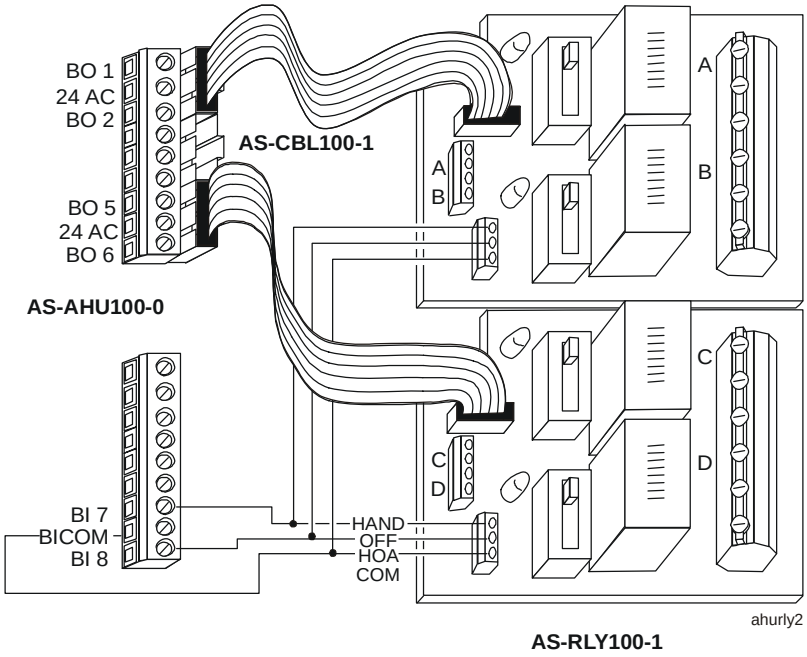

Figure 27: Wiring Binary Outputs with AS-CBL100 Quick Connect Cable

Use the AS-CBL100-0 Quick Connect Cable to connect AHU binary outputs to relays within 3 feet. Each cable can connect two binary outputs to two relays. Figure 27 shows:

- BO 1 and BO 2 controlling Relays A and B
- BO 5 and BO 6 controlling Relays C and D

However, you do need to hardwire Hand and Off terminals on the relay kit to the Binary Input (BI) terminals on the controller. Figure 28 is a schematic diagram of the relay module with an AHU controller.

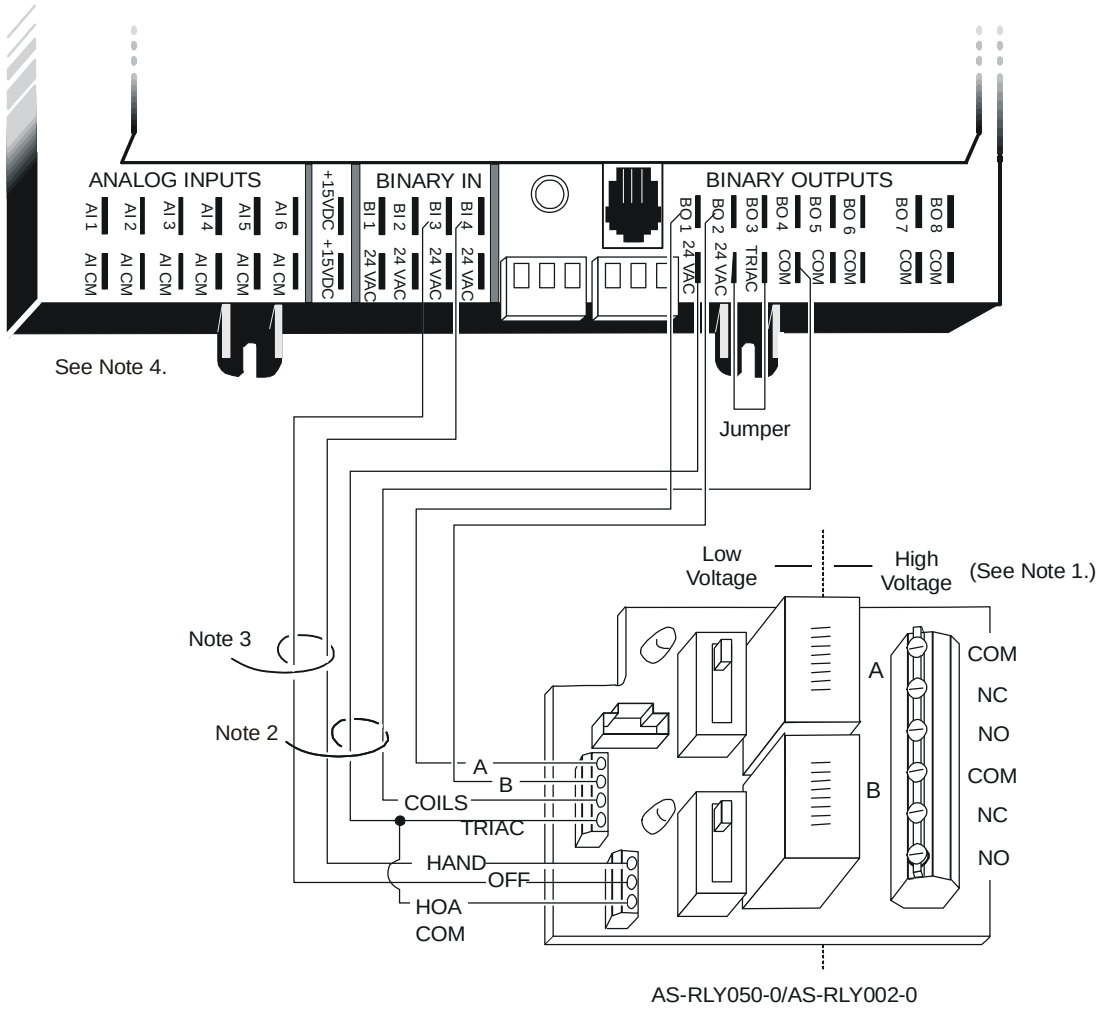

Note 1: Separate low voltage wiring on the left from line-voltage wiring on the right.
Note 2: Hand operation using the HOA switch requires common to the COILS terminal and 24 VAC to the TRIAC terminal to energize the relay.
Note 3: The Hand or Off position signals the binary input connected to those terminals. These switches can be hardwired **or** connected to one BI. This switch uses the HOA COM terminal, which is isolated from the relays.
Note 4: Your application determines exact connections to UNT.

Figure 28: Schematic Diagram of the Relay Module

Table 19: Relay Module

RLY Terminal	Description
A	Relay control from BO, switched 24 VAC or common. (Device Dependent)
B	Relay Control from BO, switched 24 VAC or common. (Device Dependent)
Coils	Relay coil supply to both relay coils, 24 VAC or common. (Device Dependent)
Triac	Triac voltage supply, used to energize relay in hand switch position, 24 VAC or common. (Must be opposite coil voltage.)
Hand	Binary Contact Feedback, closed indicates when either HOA switch is in the Hand position.
Off	Binary Contact Feedback, closed indicates when either HOA switch is in the Off position.
HOA Com	Binary Input common for Hand/Off feedback.

UNT Relay Wiring Examples

The UNT110/111 can be wired to an RLY050/002 with no BOs isolated from earth ground.

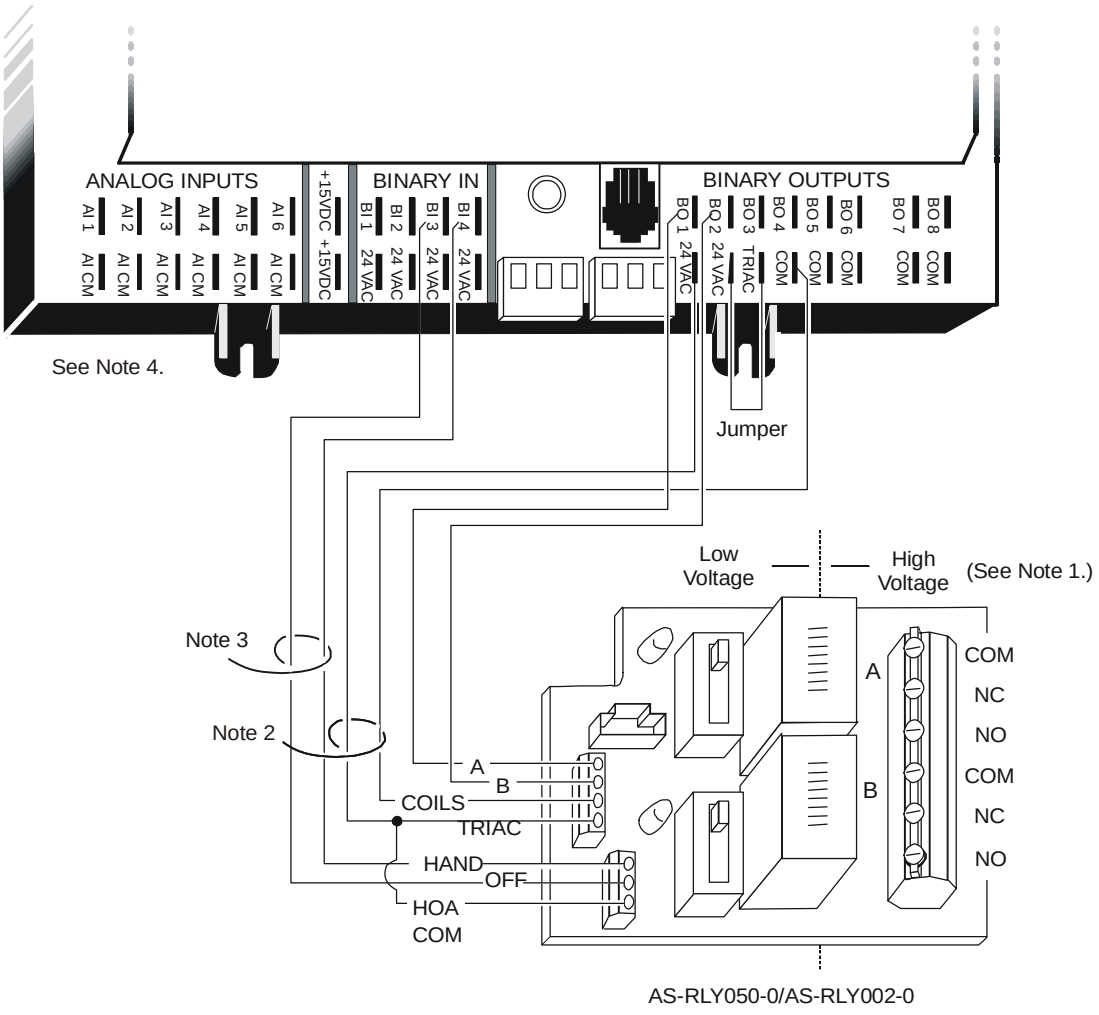

Note 1: Separate low voltage wiring on the left from line-voltage wiring on the right.
Note 2: Hand operation using the HOA switch requires common to the COILS terminal and 24 VAC to the TRIAC terminal to energize the relay.
Note 3: The Hand or Off position signals the binary input connected to those terminals. These switches can be hardwired **or** connected to one BI. This switch uses the HOA COM terminal, which is isolated from the relays.
Note 4: Your application determines exact connections to UNT.

Figure 29: UNT110/111 Wired to RLY050/002

Figure 29 shows a jumper between 24 VAC and the Triac. If the jumper is between the Triac and common, make the following changes:

1. Disconnect TRIAC from HOA COM.
2. Reverse the COILS and TRIAC wires from RLY050 to the UNT.

3. Run a separate wire from HOA COM to 24 VAC at the Binary In terminal section.

Figure 30 shows a UNT110/111 wired to an RLY050/002 with all BOs isolated from earth ground.

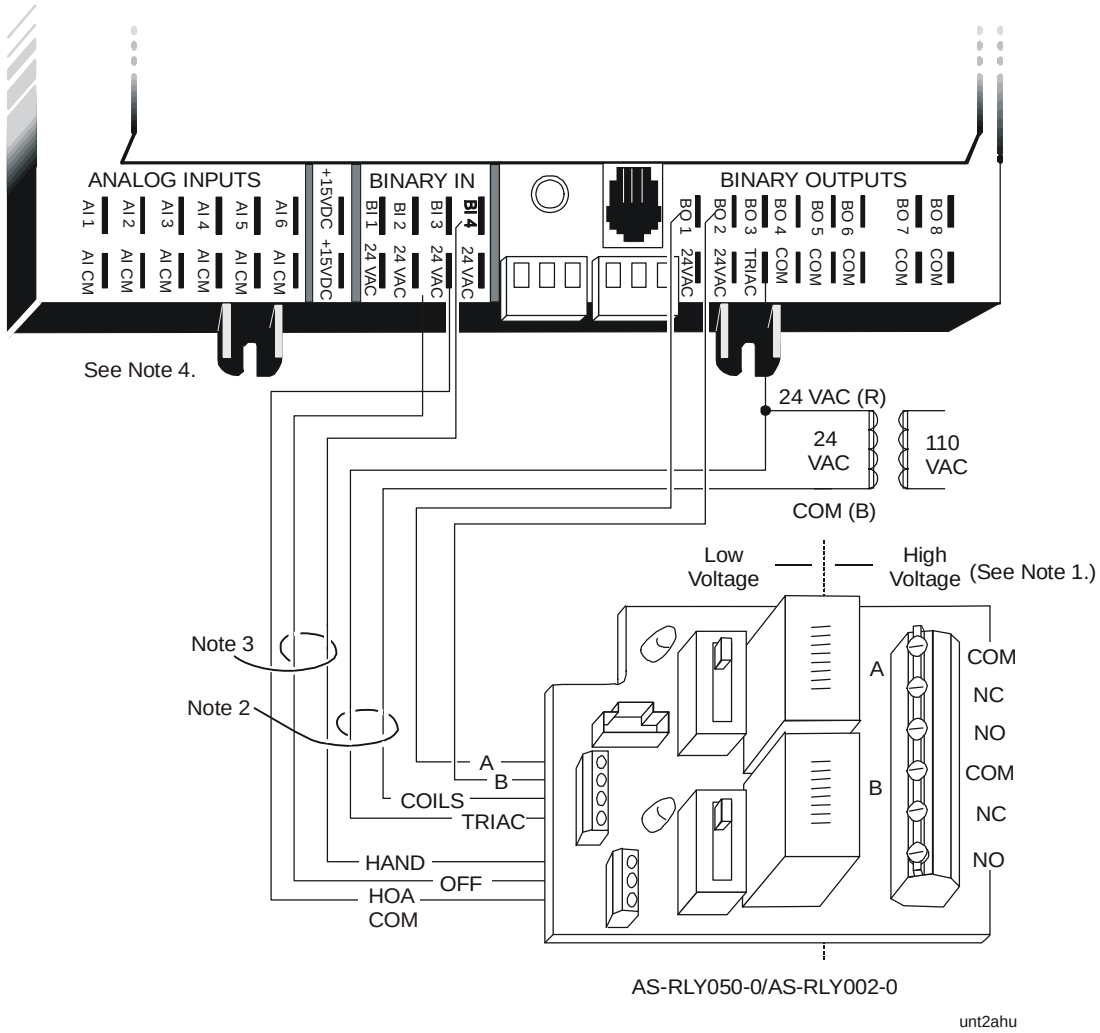

Note 1: Separate low voltage wiring on the left from line-voltage wiring on the right.
Note 2: Hand operation using the H/O/A switch requires common to the COILS terminal and 24 VAC to the TRIAC terminal to energize the relay.
Note 3: The Hand or Off position signals the binary input connected to those terminals. These switches can be hardwired **or** connected to one BI. This switch uses the HOA COM terminal, which is isolated from the relays.
Note 4: Your application determines exact connections to UNT.

Figure 30: UNT110/111 Wired to RLY050/002 with Isolated BOs

Obtain a Double-Pole, Double-Throw (DPDT) relay configuration by connecting the BO signal to two terminals on the relay kit terminal block (for example, B and C). If you require a phone jack at a remote relay kit, add an AS-CBLCON-0.

Specifications

Table 20: RLY Specifications

Feature	Specification	
Product	AS-RLY100-1	4 Relays
	AS-RLY050-0	2 Relays
	AS-RLY002-0	2 Relays
Power Requirements		Input Coil Ratings: 24 VAC, maximum 0.05 amperes Output Coil Ratings: general purpose, 250 VAC, maximum 5.0 amperes or pilot duty, 120 VAC, maximum 345 VA
Electrical Rating	AS-RLY100-1	4 Triac to 24 VAC, Single-Pole, Double-Throw (SPDT) relays
	AS-RLY050-0	2 Triac to 24 VAC, SPDT relays
	AS-RLY002-0	
Ambient Operating Conditions		0 to 50°C (32 to 120°F)
Ambient Storage Conditions		-40 to 69°C (-40 to 158°F)
Dimensions (H x W x D)	AS-RLY100-1	171.5 x 187.2 x 117.3 mm (6.75 x 7.37 x 4.62 in.)
	AS-RLY050-0	
	AS-RLY002-0	66.5 x 98.3 x 47.5 mm (2.62 x 3.87 x 1.87 in.)
Shipping Weight	AS-RLY100-1	1.05 kg (2.3 lb)
	AS-RLY050-0	0.95 kg (2.1 lb)
	AS-RLY002-0	0.1 kg (0.2 lb)
Enclosure	AS-RLY100-1	AS-ENC100
	AS-RLY050-0	AS-ENC100
	AS-RLY002-0	None
Agency Compliance		UL 864/916 and CSA C22.2 No. 205
Agency Listing		UL Listed and CSA Certified

The performance specifications are nominal and conform to acceptable industry standards. For application at conditions beyond these specifications, consult the local Johnson Controls office. Johnson Controls, Inc. shall not be liable for damages resulting from misapplication or misuse of its products.

Transformer Modules

Transformer modules provide 120 VAC to 24 VAC isolation. It is a device used to power digital controllers and input/output loads. All models include a split-bobbin for added noise immunity and a breaker with manual reset on the secondary connection. All models also have a modular connector on the secondary connection for use with AHU controller and Companion products.

The AS-XFR100-1 is a 92 VA transformer that is pre-mounted in an AS-ENC100 enclosure. It includes a power switch and a utility outlet. The enclosure can be mounted with a DIN rail or directly mounted to a wall. The enclosure supports multiple 3/4 in. and 1-1/2 in. conduit connections.

The AS-XFR050-0 is a 50 VA transformer without an enclosure. It can be used in any appropriate Underwriters Laboratories®, Inc. (UL) Listed enclosure and is used as a replacement transformer.

The same transformer that is provided in the AS-XFR100-1 and the UPM enclosure series is available as a separate item. The AS-XFR010-1 is a 92 VA transformer without any enclosure, and it is wired the same way as the AS-XFR100-1 and AS-XFR050-0.

Transformer Module Wiring (AS-XFR100-1) (AS-XFR050-0) (AS-XFR010-1)

To wire the power source:

- connect the green ground wire (pulled with the power) to the ground screw in the AS-XFR100-1 enclosure. The green outlet wire must also be attached there.
- bring 120 VAC 60 Hz into the top right portion of the transformer module enclosure. Connect the black (hot), white (neutral), and green (ground) wires.

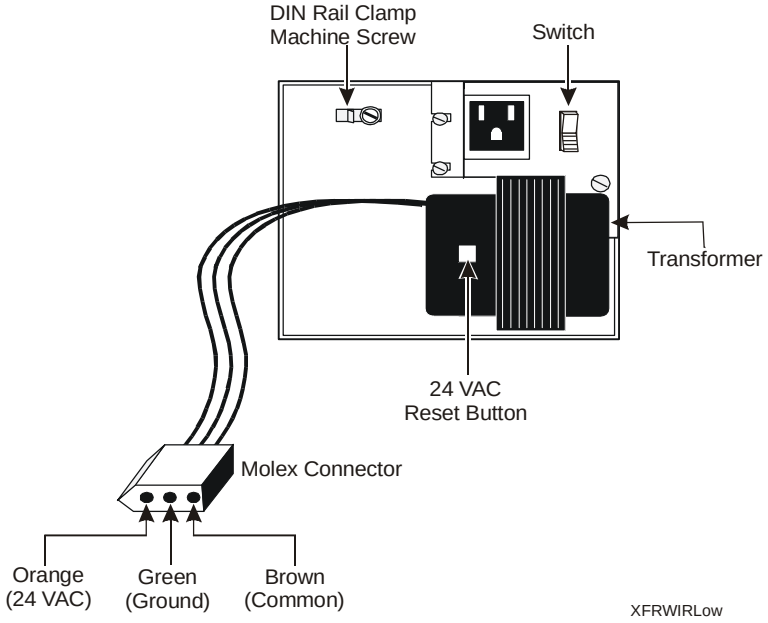

Figure 31: Transformer Wiring Details

Note: In Figure 31 the Switch controls power to the transformer. The utility outlet is not switched.

Transformer Modules Specifications

Table 21: Transformer Module Specifications

Feature	Specification	
Products	AS-XFR100-1, AS-XFR050-0, AS-XFR010-1 Split-Bobbin Transformers	
Wiring Connections	AS-XFR100-1 AS-XFR010-1	Primary: 18 AWG, 12 in., black, white, green/yellow, striped 3/8 in. Secondary: 16 AWG, 20 in., brown, orange, Molex® connector
	AS-XFR050-0	Primary: 18 AWG, 12 in., black, white, green/yellow, striped 3/8 in. Secondary: 18 AWG, 20 in., brown, orange, green/yellow, Molex connector
Electrical Rating	AS-XFR100-1 AS-XFR010-1	92 VA (primary: 120 VAC/60 Hz and secondary: 24 VAC/60 Hz)
	AS-XFR050-0	50 VA (primary: 120 VAC/60 Hz and secondary: 24 VAC/60 Hz)
Ambient Operating Conditions		0 to 50°C (32 to 120°F)
Ambient Storage Conditions		-40 to 70°C (-40 to 158°F)
Dimensions (H x W x D)	AS-XFR100-1	171.5 x 187.2 x 117.3 mm (6.75 x 7.37 x 4.62 in.)
	AS-XFR050-0	71.1 x 114.3 x 82.5 mm (2.8 x 4.5 x 3.25 in.)
	AS-XFR010-1	95.2 x 95.2 x 79.4 mm (3.75 x 3.75 x 3.125 in.)
Shipping Weight	AS-XFR100-1	3.05 kg (6.7 lb)
	AS-XFR050-0	2.15 kg (4.7 lb)
	AS-XFR010-1	2.22 kg (4.9 lb)
Enclosure	AS-XFR100-1	AS-ENC100
Agency Compliance		UL 864/916 and CSZ C22.2 No. 205
Agency Listing		UL Listed and CSA Certified

The performance specifications are nominal and conform to acceptable industry standards. For application at conditions beyond these specifications, consult the local Johnson Controls office. Johnson Controls, Inc. shall not be liable for damages resulting from misapplication or misuse of its products.

Ordering Information

Table 22: Auxiliary Gear

Code Number	Description
A-4000-137	Pneumatic replacement filter kit for FM-OAP102
AS-CBL100-0	Cable Kit: RLY050/100/020 and FMK100 interconnect cables (bag of 10)
AS-CBLCON-0	Three 6-pin and two 8-pin phone jacks with a Zone Bus screw terminal block and ZT download switch
AS-CBLPRO-2	Interface converter kit for HVAC PRO software on a PC to the Zone Bus
AS-CBLZT66-0	Replacement Cable for ZTU (6-pin to 6-pin)
AS-CBLZT68-0	Replacement Cable for CBLCON (6-pin to 8-pin)
AS-CVTPRO100-1	Zone Bus/N2 Bus Interface Converter with 120VAC/3VDC power adapter (North American version)
AS-CVTPRO200-1	Zone Bus/N2 Bus Interface Converter without power adapter (European version)
AS-CVTPRO-701	CVTPRO unit without cables or case
AS-CVTCBL-700	Replacement set of cables used with the CVTPRO converter
AS-ENC100	Multi-purpose metal enclosure
AS-FMK102-0	Function Module Kit for UPMs: enclosure for FMs; order FMs separately.
AS-RLY002-0	Relay Kit: board with two relays only
AS-RLY050-0	Relay Kit: metal enclosure and board with two relays
AS-RLY100-1	Relay Kit: metal enclosure and board with four relays
AS-XFR010-1	92 VA Split-bobbin Transformer
AS-XFR050-1	50 VA Split-bobbin Transformer
AS-XFR100-1	Transformer Kit: box-mounted split-bobbin transformer for site power isolation of 120 VAC to 24 VAC, with cables, outlet, and power switch
AS-ZTU100-1 or FA-ZTU100-1	Zone Terminal Unit* (Use AS-CBLPRO-2 to communicate with ZTUs. AS-CVTPROx00-1 is incompatible with ZTUs.)
Dock V PRO adapter* **	Adapter to connect the CVTPRO to a Palm V product
F3X1082-03**	Belkin Serial Sync Cable for use with CVTPRO and Palm m125/m130/m5xx Products
FM-IAP101-0	Function Module—input: 0 to 25 psi, 4 to 20 mA
FM-IDP001-0	Function Module—input: 0 to 0.1 in. W.C., 4 to 20 mA
FM-IDP002-0	Function Module—input: 0 to 0.25 in. W.C., 4 to 20 mA
FM-IDP005-0	Function Module—input: 0 to 0.5 in. W.C., 4 to 20 mA
FM-IDP010-0	Function Module—input: 0 to 1 in. W.C., 4 to 20 mA
FM-IDP030-0	Function Module—input: 0 to 3 in. W.C., 4 to 20 mA
FM-IDP050-0	Function Module—input: 0 to 5 in. W.C., 4 to 20 mA
FM-IDP100-0	Function Module—input: 0 to 10 in. W.C., 4 to 20 mA
FM-OAP102-0	Function Module—manual override kit includes pneumatic air line filter kit (requires FM-OAP103)
FM-OAP103-0	Function Module—output: 0 to 20 mA/psi range, user selectable.
FM-PCM101-0	10 pack of barbed fitting for IDPs and IAPs
M100C	Zone Bus Damper Actuator
ME213**	Null Modem Adapter for use with CVTPRO and Palm m100/m105/m125/m130/m5xx Products
MM-CVT101-0	RS-232 to RS-485 for N2 Bus Converter
P10701U**	Palm HotSync Cable for use with CVTPRO and Palm m100/m105 Products

* AS indicates the Metasys system and FA indicates the Facilitator system.

** These are the manufacturer's code numbers, not Johnson Controls code numbers. Order through e-Purchasing (ITAS).

*** Order from the Solvepoint Corporation at www.palmdock.com and local retailers.

Detailed Procedures

Installing an FMK102 into the Universal Packaging Module (UPM) or Mounting in the Horizontal Position

Note: For information on mounting positions, see the *Function Module Kit (FMK) AS-FMK102-0* section. Figure 32 shows mounting in the horizontal position.

To install an FMK102 into the UPM or mount in the horizontal position.

1. Remove all Function Modules (FMs) from the FMK102. The mounting holes are accessible through this area.

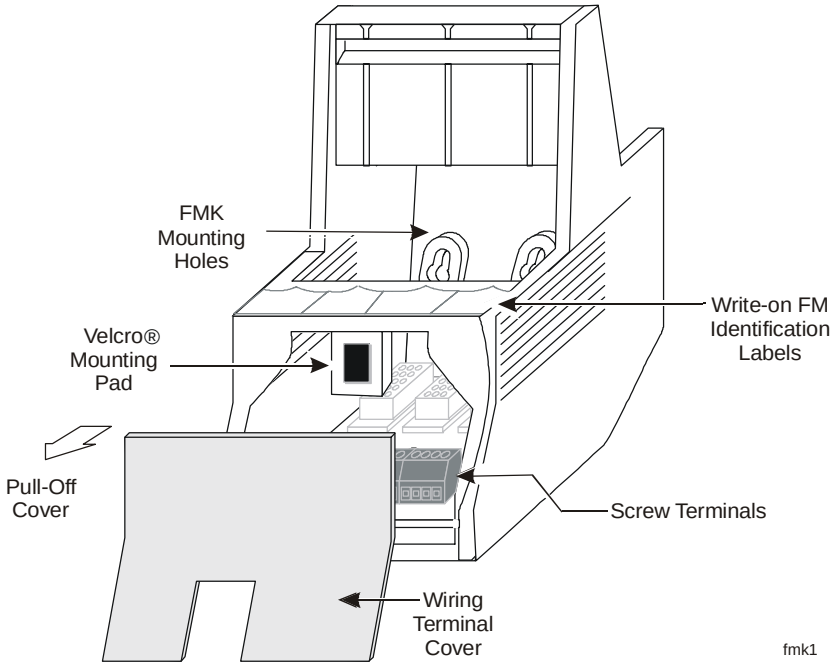

Figure 32: FMK Mounting

2. Position the FMK in the desired area of the UPM. Align the small end of the slotted mounting holes in the FMK with the grid pattern holes in the UPM. Mark these holes to reference the mounting area.

Note: Ensure your selected mounting position does not interfere with door closure.

3. Set the FMK aside and install the two provided mounting screws in the desired holes. Insert the screws so there is approximately 1/2-in. thread visible.

4. Install the FMK mounting slots over the mounting screws. Slide the FMK into place. Position the screws at the small end of the slot. Tighten the screws to secure the FMK102.

5. When you have completed mounting the FMK102, you may go on to wire the unit. Remove the wiring cover to access the wiring terminals, by firmly pulling the cover away from the unit. To reinstall the cover, align the cover and the unit and press firmly into place.

Mounting the FMK Perpendicular on a Wall or in an Enclosure

To mount the FMK perpendicular on a wall or in an enclosure:

1. Remove the wiring terminal cover, pulling it off the unit (Figure 33).

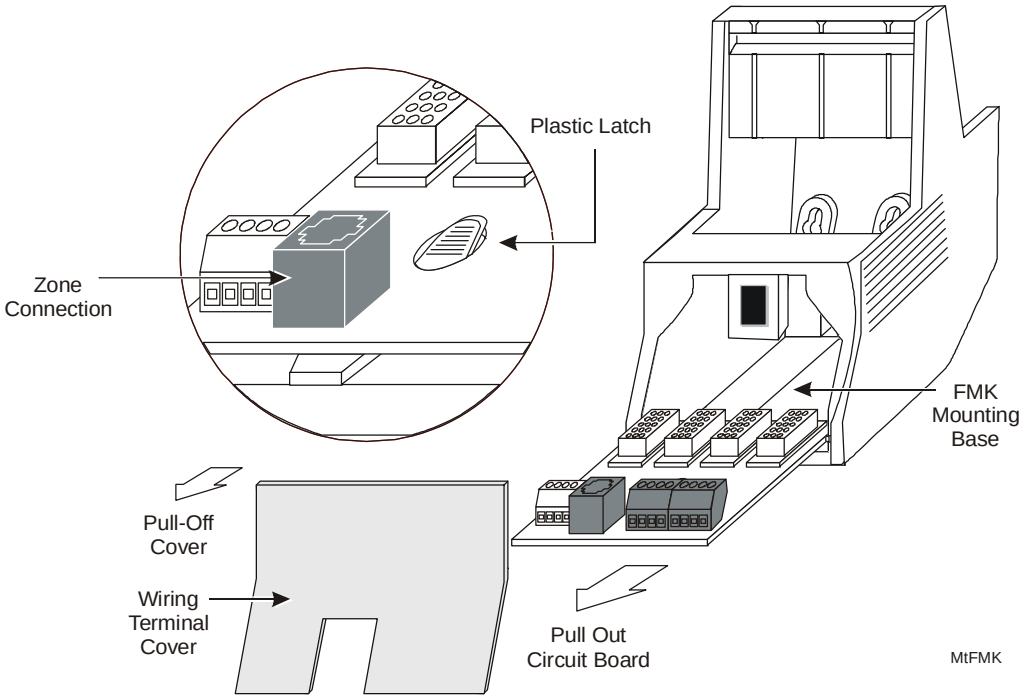

Figure 33: Mounting the FMK

2. Remove the printed circuit board from the unit by simultaneously pressing down on the plastic latch and pulling the board out of the unit.
3. Determine the required anchors and mounting screws for the mounting surface. Use three or four size No. 8 to No. 12 mounting screws.

Note: Ensure the screw heads do not interfere with the FMK printed circuit board.

4. Position the FMK so there is clearance to install the FMs and wire the terminals. Refer to Figure 14 for dimensions.
5. Drill four holes in the corners of the FMK base. Remove the FMK and install the wall anchors if required. Reposition the FMK frame over the mounting holes and install the screws.

6. Reinsert the printed circuit board into the FMK frame. Ensure the board aligns into the guide slots and that the wiring terminals face the front of the unit. Push the board into the FMK until the plastic latch snaps into the board.

Setting Up the B & B 485TBLED Converter for Use with Johnson Controls N2 Devices

To set up the B & B 485TBLED converter for use with Johnson Controls N2 devices:

1. Using Figure 34, insert one jumper in the CONTROL SD location and insert the other jumper in the ECHO OFF location. The SD position causes a timed internal RTS signal to be generated when the Transmitting Data (TD) signal is active.
2. Insert an external 100-ohm resistor between the GND terminal and the N2 cable reference wire.

Note: The external power supply common is also connected to the GND terminal. No connection is made to the FR GND SHIELD terminal on the B & B converter.

3. Connect terminals TD(A) and Receiving Data (RD)(A) together with an external jumper wire to form the N2- line connection point.
4. Connect terminals TD(B) and RD(B) together with an external jumper wire to form the N2+ connection point.

Note: The B & B converter does not have provisions for an End-of-Line Resistor (EOLR), therefore increased Retries and Offlines occur.

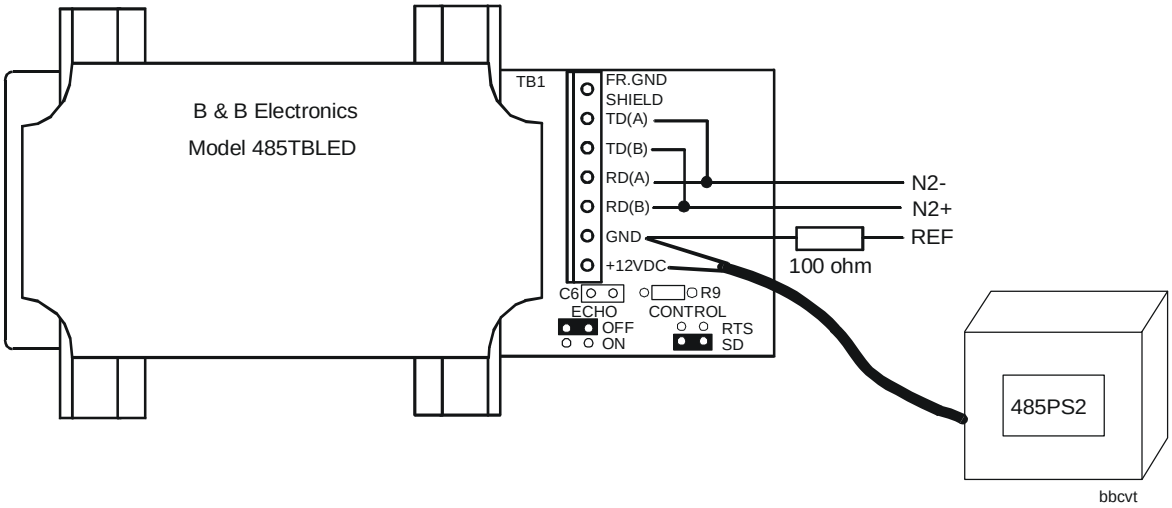

Figure 34: B & B Electronics 485TBLED Converter and 485PS2 Power Supply