Johnson Controls

BMMS-1P™
SINGLE PHASE STARTER

Installation & Operation Guide

LIT-12013012

Thank you for purchasing the Johnson Controls Single Phase Building Management Motor Starter! Please read this manual thoroughly to ensure safe installation and proper operation.

UL US LISTED

Precautions

To prevent injury and property damage, follow these instructions. Failure to adhere to installation/operation procedures and all applicable codes may result in hazards as indicated by warning codes outlined below:

⚠ DANGER
indicates an imminently hazardous situation which, if not avoided, will result in death or serious injury. This signal word is to be limited to the most extreme situations.

⚠ WARNING
indicates a potentially hazardous situation which, if not avoided, could result in death or serious injury.

⚠ CAUTION
indicates a potentially hazardous situation which, if not avoided, may result in minor or moderate injury. It may also be used to alert against unsafe practices.

⚠

This is the safety alert symbol. Read and follow instructions carefully to avoid a dangerous situation.

⚠

This symbol alerts the user to the presence of "dangerous voltage" inside the product that might cause harm or electrical shock.

Safety Instructions

⚠ DANGER
Equipment starts automatically. Lockout/tagout before servicing.

⚠ CAUTION
As with all electrical products, read manual thoroughly. Only qualified, expert personnel should perform maintenance and installation. Contact the nearest authorized service facility for examination, repair, or adjustment. Do not disassemble or repair unit unless described in this manual; death or injury to electrical shock or fire hazard may result. Specifications and manual data subject to change. Consult factory for additional information.

⚠ △

HAZARDOUS VOLTAGE

- Disconnect and lock out all power before installing or servicing equipment.
- This equipment may require locking out multiple power sources prior to service
- Install and wire in accordance with all applicable local & national electrical and construction codes

Installation

FAILURE TO FOLLOW THESE INSTRUCTIONS MAY RESULT IN DEATH OR SERIOUS INJURY

Mounting
Mount the starter on a minimum 14 cu-in single gang junction box. To access mounting holes, slide upper and lower covers to the open position. (See Figure 1)

Using provided mounting screws (6-32 x 7/8"), attach starter housing to junction box (once appropriate wiring has been completed).

⚠ WARNING
- Do not locate starter in an environment subject to flammable gases, dusts or materials. Contact arcing can induce explosion or fire.
- Install starter in UL Type 1 (NEMA 1) appropriate locations only. Safe mounting requires a dry, protected environment.
- The BAS-1P is rated for maximum ambient temperature of 40°C
- Do not allow any metal shavings or debris from installation to enter enclosure.

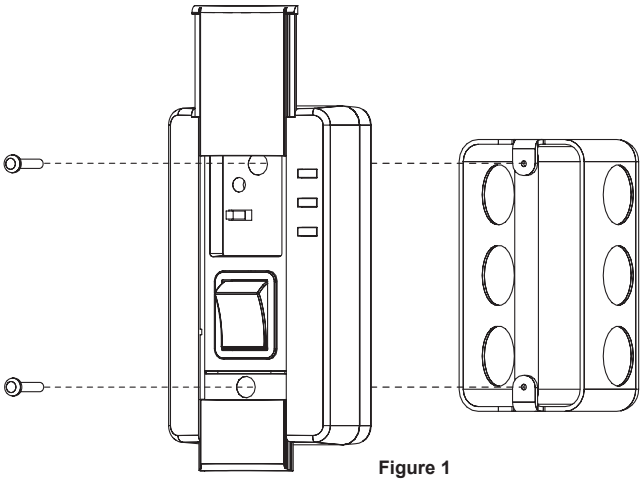

Figure 1

Main Power Wiring
Wire main power input and output to the appropriate 12AWG wire leads utilizing properly sized wire nuts. Use only copper conductors rated at least 60°C. Maintain proper clearances and verify that no possibility of an electrical short exists between the power conductors or enclosure. Ensure that wires are not under stress and all insulation is intact.

Low Voltage Wiring
Automation system control wiring should be run in a separate conduit. The control terminals accept 26~14AWG wire torqued to 3.5 in-lb.

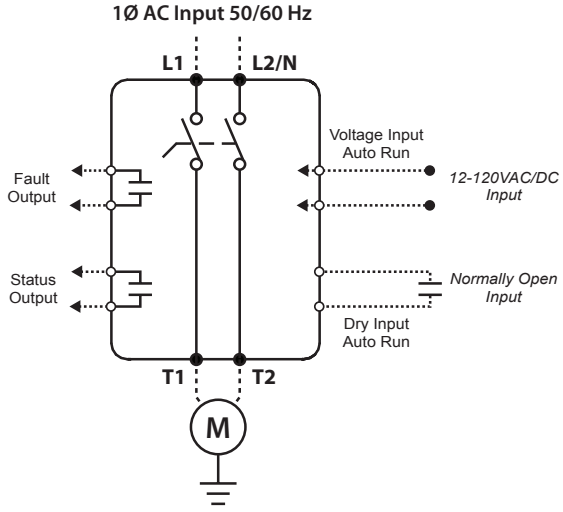

 © Copyright 2018 Johnson Controls

Operation

Overload Adjustment
Confirm nameplate Full Load Amperage (FLA) to ensure proper overload protection. Using a flathead screwdriver, turn the adjustment dial to the desired amperage setting. The starter is not rated to protect loads exceeding 16 amps @120VAC, and 8.8A @230VAC.

LED Status Indicators

POWER (PWR)
Illuminates when voltage is applied to the input terminals and main power switch is in the ON (I) position.

RUN
Under a RUN condition, the RUN LED will remain illuminated if the BAS-1P senses current providing status. The LED will flash when the unit does not sense current.

FAULT (FLT) - Overload Trip
The BAS-1P indicates a fault condition by flashing the red FAULT LED which will remain constant in the event of a fault trip. The LED will also flash if a RESET attempt is made during the 180 second overload cool down period.

Operation Modes

RESET
To reset the starter to normal operation following a Fault condition, slide the 3-position switch to RESET and hold for a minimum of 5 seconds (after 180 second cool down period has elapsed). Once starter has been reset, return switch to the desired mode.

MANUAL (HAND MODE)
In Manual or HAND mode, the BAS-1P will function as a manual motor controller. Select the ON (I) position on the main power switch to engage motor.

AUTOMATIC (AUTO MODE)
When utilizing the starter in the AUTO mode, a signal sent via the terminal inputs (located on rear of unit) determine motor operation (ON or OFF).

Lockout Options
To lockout, slide the lower cover upward to reveal concealed locking grasp. Insert a standard padlock to prevent unauthorized access or tampering. If multiple padlocks are required, an optional padlocking attachment can be utilized (not included). See Figure 2B.

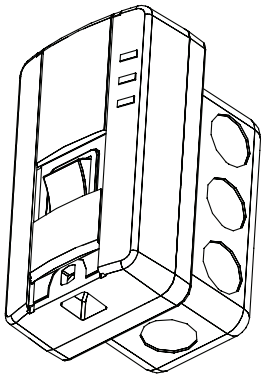

Figure 2A

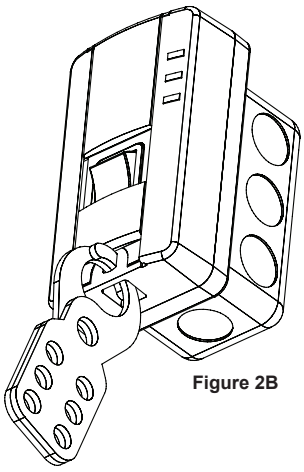

Figure 2B

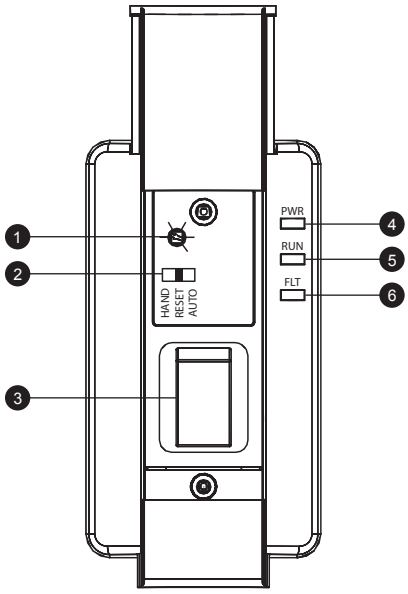

1. Overload Adjustment
2. Operation Mode Selector
3. Main Power Switch*
4. **PWR** Power Status LED
5. **RUN** Run Status LED
6. **FLT** Fault / Overload LED

**This device meets NFPA-70 (NEC) motor disconnect requirements per paragraph 430.109 (C)(2) Stationary Motors of 2HP or Less.*

Dimensions

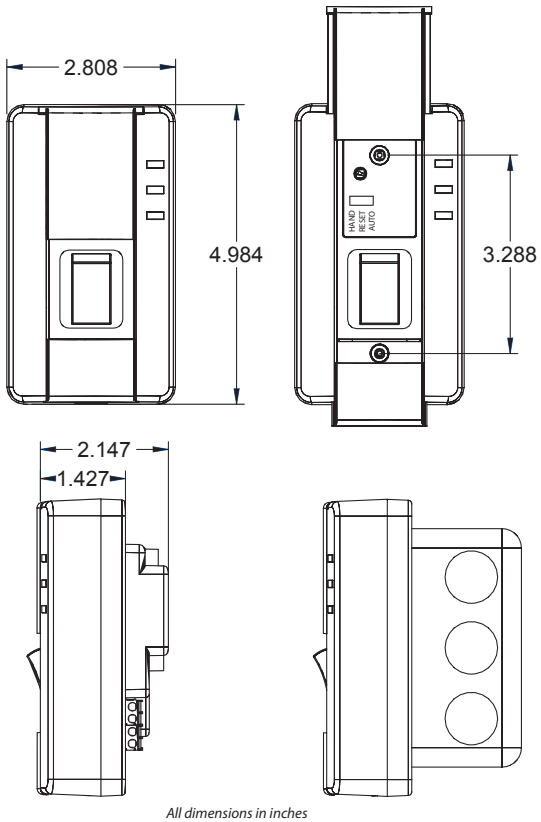

All dimensions in inches

Product Ratings

	UL 508 Horsepower		Short Circuit Protection	Interrupt Current	Max Current	Overload	Reset
	115VAC	230VAC					
BAS-1P	1HP		Suitable for use on a circuit capable of delivering not more than 1kA RMS Symmetrical Amperes, 230 Volts maximum when protected by Class RK5 fuses (30 Amp max) or inverse time circuit breaker (40 Amp max)	$I_k \leq$ 1kA RMS Symmetrical	16A @ 120VAC 8.8A @230VAC	I^2t Class 10	Manual
BAS-1P-AR							Automatic - 3 attempts max, 3 minutes between attempts

 © Copyright 2018 Johnson Controls