Operation

- Intended for use with 3-Phase, 50/60Hz
- Accepts 208-600VAC, ±10%
- Short Circuit (RMS, Symmetrical)
  Stand-Alone Overload Unit - 200 KAIC, 600V Max.
  Standard Starter - 5 KAIC, 600V Max.
  Combination Starter - 100 KAIC, 240V Max.
  30 KAIC, 480V Max.
  10 KAIC, 600V Max.
- Ambient Operating Temperature = -20°C to 60°C
- Ambient Storage Temperature = -40°C to 85°C

⚠⚠ DANGER

- Ensure that all connections are properly torqued and enclosure is closed prior to applying power to the device.
- Ensure all mechanical equipment operated by the starter is clear for safe operation in case of starter activation.
- When in AUTO mode, starter may be activated remotely by the control system

Keypad Interface

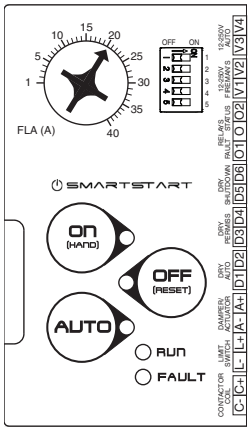

Operation Modes

ON (HAND)
Press the ON mode button to manually engage motor.

OFF (RESET)
Press the OFF mode button to manually disengage the motor. Additionally, the OFF button serves as a manual Reset. Press and hold OFF for 5 seconds to Reset the starter after a fault trip.

AUTO
When utilizing AUTO mode, the starter is controlled by a remote Start/Stop command.

LED Status Indicators

MODE LEDs
Illuminates with corresponding mode selection (HAND/OFF/AUTO). Flashing mode LED signals a fault trip during the last operating mode. All 3 mode LEDs will flash simultaneously during Shutdown or Fireman's Override operation.

RUN LED
Illuminates when starter is given a Run signal and 20% of FLA is detected. LED will flash when Run signal is present without proof of flow to the motor.

FAULT LED
Blinks when current reaches 1.15% of FLA or greater and illuminates upon a fault condition or overload trip. Starter must be returned to the OFF mode in order to Reset.

I/O Descriptions

Use 14-26AWG wire for I/O Terminals, Torque to 3.5 lb-in	
TERMINAL	**DESCRIPTION**
V3 / V4	**Wet Auto Input** - Accepts wetted customer input. Input voltage must be within 12 - 250 VAC/VDC (4.2mA Max.). Sending voltage to the contact will send a run command to the starter when in Auto Mode.
V1 / V2	**Fireman's Override Input** - Accepts wetted customer input. Input voltage must be within 12 - 250 VAC/VDC (4.2mA Max.). Sending voltage to the contact will send a run command to the starter, regardless of mode the starter is in (HAND/OFF/AUTO) and will also override a shutdown command. When active, all mode LED's flash.
O1 / O / O2	**Status and Fault Relay Output** - O1 - Fault Terminal: Connects to a relay contact that closes in a fault condition. O - Common: Common connection for the fault and status relays. O2 - Run Status: Connects to a relay contact that closes when the motor draws 60% of the FLA setting.See below for Relay Output current ratings 110VDC, 0.3A Resistive 125VDC, 0.5A GP 30VDC, 2.0A Resistive 120VAC 50/60Hz, 0.5A Resistive 125VAC 50/60Hz, 1.0A GP 240VAC 50/60Hz, 0.25A Resistive
D5 / D6	**Dry Shutdown Input** - When the input is open the Motor Starter will open in all modes (except Fireman's Override), HAND/OFF/AUTO LED's will flash indicating a shutdown. (N.C. dry contact or transistorized input)
D3 / D4	**Dry Permissive Auto Input** - When the input is open, the Auto input is disabled. (N.O. dry contact input)
D1 / D2	**Dry Auto Input** - When closed, the starter will run when in Auto Mode. (N.O. dry contact or transistorized input)
A- / A+	**Damper Motor Output** - 24 VDC 1A maximum. Provides a 24VDC damper motor output when the motor starter is commanded in either Auto or Hand Mode. The damper motor output must be wired with a damper end switch input as noted below to prevent overloading of control circuit.
L- / L+	**Damper Switch Input** - Switch input dry contacts must be rated for at least 24VDC, (2.4mA Max). When used with the damper motor output, the contactor coil is in series with customer provided damper contacts which disables the motor starter until the damper is in position. (NO open dry contact)
C- / C+	**Contactor Output** - Provides a 24V output to the contactor when the motor starter is commanded in either Hand or Auto mode and the damper switch input is closed. (Wired from manufacturer) 24V, 0.42A Max. for JCI contactor with 24VAC coil.

- To conform to the EMC directive a ferrite core is required on the input of the starter module. Consult the factory for the recommended part number. For a CE compliant installation, all electrical connections must be made by a qualified electrical technician.

Product improvement is a continual process. Johnson Controls, and associated logos are trademarks of Johnson Controls, Inc.
All sales subject to JCI Terms & Conditions.

414.524.1200 | www.johnsoncontrols.com

Johnson Controls

BMMS™ BUILDING MANAGEMENT MOTOR STARTER
SMARTSTART

LIT-12013010

Installation & Operation Guide

This manual is available for download at www.johnsoncontrols.com

c UL us LISTED CE

Precautions

To prevent injury and property damage, follow these instructions. Failure to adhere to installation/operation procedures and all applicable codes may result in hazards as indicated by warning codes outlined below:

⚠ DANGER

indicates an imminently hazardous situation which, if not avoided, will result in death or serious injury. This signal word is to be limited to the most extreme situations.

⚠ WARNING

indicates a potentially hazardous situation which, if not avoided, could result in death or serious injury.

⚠ CAUTION

indicates a potentially hazardous situation which, if not avoided, may result in minor or moderate injury. It may also be used to alert against unsafe practices.

⚠

This is the safety alert symbol. Read and follow instructions carefully to avoid a dangerous situation.

⚠

This symbol alerts the user to the presence of "dangerous voltage" inside the product that might cause harm or electrical shock.

Safety Instructions

⚠ DANGER

Equipment can start automatically. Lockout/tagout before servicing.

⚠ CAUTION

As with all electrical products, read manual thoroughly. Only qualified, expert personnel should perform maintenance and installation. Contact the nearest authorized service facility for examination, repair, or adjustment. Do not disassemble or repair unit unless described in this manual; death or injury to electrical shock or fire hazard may result. Specifications and manual data subject to change. Consult factory for additional information.

Installation

⚠⚠ DANGER

HAZARDOUS VOLTAGE

- Disconnect and lock out all power before installing or servicing equipment.
- This equipment may require locking out multiple power sources prior to service
- Install and wire in accordance with all applicable local & national electrical and construction codes

FAILURE TO FOLLOW THESE INSTRUCTIONS MAY RESULT IN DEATH OR SERIOUS INJURY

Mounting

Mount the starter on a vertical surface, with the line terminals facing up. Install using 1/4" diameter hardware suitable for the mounting surface.

⚠ WARNING

- To maintain overcurrent and short-circuit protection, the manufacturer's instructions for selecting current elements and setting the instantaneous-trip circuit breaker must be followed.
- Tripping of the instantaneous-trip circuit breaker is an indication that a fault current has been interrupted. Current-carrying components of the magnetic motor controller should be examined and replaced if damaged to reduce the risk of fire or electric shock.
- Do not locate starter in an environment subject to flammable gases, dusts or materials. Contact arcing can induce explosion or fire.
- Locate starter in a location appropriate to enclosure ratings and operational ratings.
  (e.g. NEMA 1 should only be located in a dry, protected environment).
- Do not allow any metal shavings or debris from installation to enter enclosure.

Wiring

Wire main power input and motor leads to the appropriate terminals tightened to specified torques indicated in the Torque Table below. Use only copper conductors rated at least 60°C for applications less than 100A and at least 75°C ≥ 100A. Maintain proper clearances and verify that no possibility of an electrical short exists between the power conductors or enclosure. Ensure that wires are not under stress and all insulation is intact. Verify voltage input matches label and the control power is tapped per schematic.

Low Voltage Wiring

Automation system control wiring should be run in a separate conduit. The control terminals accept 26~14AWG wire torqued to 3.5 lb-in.

Torque Table

NEMA Size	**Input** (lb-in)		**Output** (lb-in)
	Standard	**Combination**	**Motor Leads**
00	15.6	18	20
0	15.6	18	20
1	15.6	18	20
1P	15.6	18	20

Program Switches

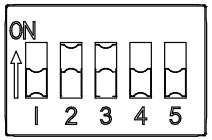

SWITCH 1 Default=OFF	Smartstart Disable - The following protective functions will be disabled when in the on position. Locked Rotor / Stall Max Start Time Out of Calibration Phase Unbalance
SWITCH 2 Default=ON	Overload Trip Class: Selects overload trip class 10 when ON and overload trip class 20 when OFF. Default: ON
SWITCH 3 Default=ON	(ON) - Fault reset: Depress the "OFF" button for 5 seconds to reset a fault trip. Starter will return to "OFF" mode. (OFF) - Automatic Fault Reset: The starter will make 3 attempts at an auto fault reset separated by 5 minutes intervals. Also allows manual reset as above.

SWITCH 4	SWITCH 5	POWER FAIL MODES
ON	ON	Default Mode - Always return to last mode with no delay in the event of a power failure.
OFF	OFF	Default Mode - Always return to last mode with no delay in the event of a power failure.
ON	OFF	Always return to last mode with a 10 second delay in the event of a power failure.
OFF	ON	Upon a power failure, return to off mode.

Protective Features

Cycle Fault	Trips when the starter is activated at a rate exceeding 20 starts per minute.
Short 24V	Trips if the current drawn from the 24VDC damper motor terminals exceeds 1A.
Locked Rotor	Trips when a locked rotor condition is detected for 0.5 seconds. (Smartstart mode only)
Max Start Time	Trips if the motor takes more than 10 seconds to start. (Smartstart mode only)
Out of Calibration	Trips if the FLA setting is determined to be incorrect based on the motor inrush current .(500-1400% of FLA current) (Smartstart mode only)
Stall	Trips if a STALL condition is detected (0.5 sec @ 300% FLA and current slope not decreasing.) Disabled during startup.
Overload	Overload trip class 10 or 20, Trip current = 115% of FLA. Trips when the load is greater than the trip current. The trip time will be determined by the Class 10/20 DIP switch. (I2t trip curve)
Phase Unbalance	Trips the in the event of a phase failure or if any phase deviates by more than 25% from the average. (Smartstart mode only)

Electronic Overload Operation

When an alarm occurs, the fault LED will illuminate. The type of alarm will be indicated by flashing a combination of the HAND/OFF/AUTO LED's as indicated in the table below.

FAULT	FLASHING LED
Cycle Fault Alarm	NONE
Short 24V Alarm	AUTO LED
Locked Rotor Alarm	OFF LED
Max Start Time Alarm	OFF & AUTO LED's
Out of Calibration Alarm	HAND LED
Stall Alarm	HAND & AUTO LED's
Overload Alarm	HAND & OFF LED's
Phase Unbalance Alarm	HAND, OFF, & AUTO LED's

*Run and Fault LED's will flash together in the event of a hardware fault.

Wiring Schematic*

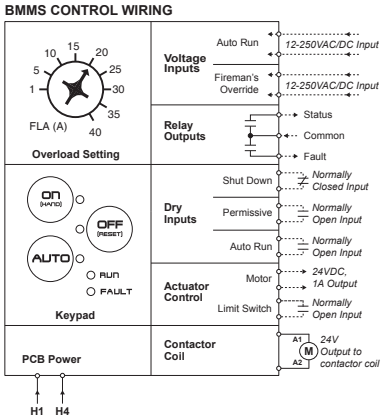

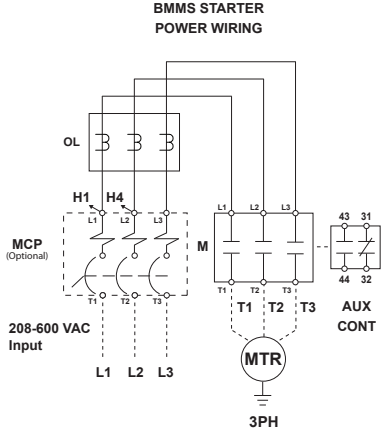

*Standard product wiring diagram shown. As-built product wiring may vary. Product wiring diagram located on starter enclosure.