System 450™ Modular Electronic Controls Catalog



PENN
BY JOHNSON CONTROLS



> johnsoncontrols.com



> Building Efficiency



> Commercial Refrigeration



> Modular Control Systems

FOR THE LATEST PRODUCT UPDATES, VISIT US ONLINE AT johnsoncontrols.com



System 450 Control System with Control, Power and Expansion Modules

System 450™ Series Modular Controls

System 450 is a family of modular, digital electronic controls that is easily assembled and set up to provide reliable temperature, pressure, and humidity control for a wide variety of HVACR applications, commercial process applications, and industrial process applications.

The System 450 control system is designed to replace System 350™ and System 27 control systems, and to provide many additional features and benefits with fewer than twenty model variations.

System 450 control modules provide a field-configurable, out-of-the-box solution. Most System 450 control modules can control temperature, pressure, and humidity systems simultaneously.

A single C450 control module can be set up as a stand-alone control or connected to expansion modules to control up to ten on/off relay and proportional analog outputs, based on any of the three available inputs.

System 450 Control Modules with Communications enable you to connect System 450 control systems to Modbus® or Ethernet networks for remote monitoring and setup. The Modbus communications control module is an RS485, RTU-compliant subordinate device. The Ethernet communications control module has an integral web server that can deliver web pages through a direct connection, on your LAN, or across the Internet.

System 450 Reset Control Modules provide many of the features of the standard models for temperature and humidity control. In addition, these modules provide setpoint reset, real-time setback scheduling, and runtime balancing (equal runtime) capability.

The System 450 Control Module with Hybrid Analog Output has a single self-selecting analog output to optimize and extend the controlled speed range of variable speed electronically commutated (EC) motors.

Features and Benefits

Features	Benefits
Durable, Compact, Interchangeable Modular Components with Plug-Together Connectors and DIN Rail or Direct Wall-Mount Capability	Eliminate field wiring between modules and allows you to quickly and easily design, assemble, install, and upgrade your control systems.
Versatile, Multipurpose, Field-Configurable Control Modules and Expansion Modules Designed for Global Use	Allow you to create a wide variety of application-specific control systems capable of controlling temperature, pressure, or humidity, or all three conditions simultaneously, with only a smaller suite of module models.
Ethernet Communication Capability through a Built-in Web Server (Ethernet Control Modules Only)	Allows you to monitor your control system status and set up or change the parameters through a direct Ethernet cable connection, through a LAN connection, or over the Internet. The built in web server delivers user-friendly web pages to client browsers on a desktop, laptop, tablet, or smart device.
RS485, RTU Compliant Modbus Network Communication Capability (Modbus Control Modules Only)	Enables a head-end RS485 Modbus master controller to read and write control system status and setup parameters to the System 450 Modbus communication control module.
Up to Three Hard-Wired Input Sensors and Up to Ten Relay or Analog Outputs (In Any Combination) per Control System	Allow you to build complex custom control systems while reducing your control system cost to only the cost of the required components.
Control Modules with Bright Backlit LCDs and Four-Button Touchpad User Interface	Provide quick, clear, visual status of your System 450 control system inputs and outputs with the touch of a button and enable you to quickly and easily set up and adjust your control system.
Multipurpose, All-In-One Control Modules	Enable simple, stand-alone, single-module control systems that are temperature, pressure, and humidity capable out of the box and easy to set up in the field to replace a wide variety of OEM HVACR and process controls.
An Extensive Suite of Compatible Temperature and Humidity Sensors, and Pressure Transducers	Allows you to monitor and control a wide range of HVACR and process conditions in a variety of standard and global units of measurement.
High Input Signal Selection	Enables your control system to monitor a temperature, pressure, or humidity condition with two or three sensors (of the same type) and control your system outputs based on the highest condition value sensed by the referenced sensors.
Differential Control	Enables your control system to monitor and maintain a temperature, pressure, or humidity differential between two sensor points within a system, process, or space.
Web Page Server on Ethernet Communication Modules	Provides a simple, intuitive web interface for easy remote monitoring, setup and adjustment of your control systems across Ethernet networks.
Password Protection for Local Access (Ethernet and Modbus Control Modules Only) and Password Protection for Remote Access (Ethernet Control Module Only)	Deter unauthorized changes to the control system settings, but allow local and remote monitoring of your control system status.
Analog Output Signal Limiting Features (Communication Control Modules Only)	Allow you to select the rate and condition range at which the control updates the analog output signal, potentially reducing wear on the controlled equipment.
Binary Input with Time Delay (Communication Control Modules Only)	Allows you to use an external set of dry contacts and selectable time delays to control relay outputs.
Adjustable Minimum and Maximum Setpoint Temperatures (Reset Control Modules Only)	Enable compliance with the manufacturer's specifications for your controlled HVACR and process equipment.
Selectable Shutdown-High and Shutdown-Low Temperature Settings (Reset Control Modules Only)	Save you energy by shutting down controlled equipment when the ambient temperature rises or drops to a point where heating or cooling is no longer required.
Real Time Clock and Adjustable Setback Temperature (Reset Control Modules Only)	Save you energy by setting back heating, cooling, or humidity setpoints during scheduled unoccupied periods (24-hour day, 7-day week schedule).
User-Defined Reset Control Capability (Reset Control Modules Only)	Saves you energy in a wide variety of temperature and humidity reset control applications by adjusting the temperature or humidity control loop, based on changes in ambient outdoor temperature or other uncontrolled conditions.

Overview

The System 450 Series is a family of compact digital electronic control, expansion, and power modules that are easily assembled and set up to provide reliable on/off and proportional control of temperature, pressure, and humidity conditions in a wide variety of HVACR applications, commercial process applications, and industrial process applications.

A System 450 Series control system includes:

- A single System 450 Control module with LCD and four-button touchpad
- One to three inputs
- One to ten relay and/or analog outputs (provided by the control module and expansion modules)
- An optional power module

Compact Modular Plug-Together Design

All System 450 modules feature a compact, durable, gray Lexan® housing with DIN rail clips and slotted mounting holes molded into the back of the housing for easy installation.

System 450 modules also feature 6-pin connectors on the sides of the housing, enabling easy assembly and upgrade of your control systems and eliminating the need for field wiring between modules.

A System 450 control system provides compact, clean, and consistent control system assemblies that are simple to build, install, and maintain.

Multipurpose and Field-Configurable Design

System 450 control, expansion, and power modules are multipurpose devices that can be easily configured in the field to control temperature, pressure, and humidity, simultaneously.

Global Design

A System 450 control system is the next generation of System 350 and System 27 modular control system, with fewer than twenty model variations, provides far more features and flexibility than either the System 350 modular control system (54 models) or the System 27 modular control system (40 models).

System 450 modules are designed, tested, and certified for global application and are Underwriters® Laboratories, Inc. (UL) Listed and CE Compliant.

System 450 control system can be set up in standard units of measurement used worldwide: Fahrenheit, Celsius, psi, bar, inches water column (in W.C.), and relative humidity (RH).

Control Capabilities

A System 450 control system offers a variety of control capabilities, depending on the model selected.

Note: See the table on page IX for more information about System 450 control modules with specific features.

Network Communications

Network communications control modules provide network connectivity and communications. Depending on the System 450 communications control module, it can connect to and communicate over Ethernet networks or Modbus networks. *See the table on page IX for more information about the System 450 control modules with this feature.*

Ethernet Communications

System 450 Control Modules with Ethernet Communications have an integral web server that delivers web pages to client browsers on desktop and laptop computers, as well as smart phones, devices, and tablets. The System 450 web UI allows you to monitor your control system status and set up or change the configuration in simple, user-friendly web pages delivered to your computer via a direct connection, connection through a LAN, or over the internet.

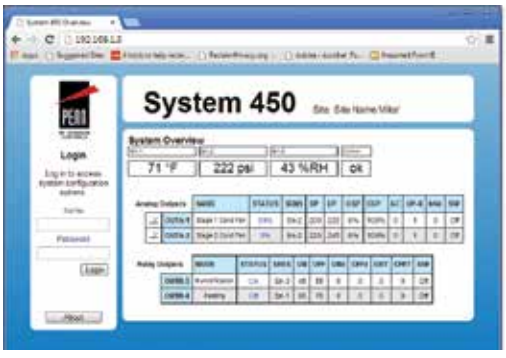

System 450 System Overview Page Example

You can monitor control system status and configure the control system parameters in both the local UI (LCD and four-button touch pad) and the web UI.

Overview

System 450 Control modules with Ethernet Communications allow you to:

- Directly connect your computer to the System 450 control module with an Ethernet cable, then set up, monitor, and modify your control system.
- Connect your control system to an existing network and establish a static IP address or use a DHCP server to provide a dynamic address.
- Set up a Dynamic DNS and allow you to browse to your System 450 control system on a local network or across the Internet using a text-based URL (host name) instead of a numeric IP address and port number.

The System 450 web UI offers easy remote access to your System 450 controls system across your LAN or across the Internet. The web UI allows you to log in (directly, locally, or remotely) and view the web UI system status, system setup parameters, and parameter values in the UI.

The remote access lock feature, when activated in the web UI, allows users to view the control system status, but not make system changes. The system configuration capability allows you to set up or change all the parameters of your system outputs.

RS485 Modbus Communications

The System 450 Control Module with Modbus® Communications is an RS485, RTU compliant Modbus subordinate device. It allows you to connect your System 450 control system to Modbus networks and communicate over them.

The System 450 Modbus communication control module also allows your entire control system to respond to data requests and commands from a Modbus master device on the Modbus network.

On/Off Relay Control

Relay outputs provide low-voltage and line-voltage on/off control for devices and equipment in your controlled systems. Each relay output is a single-pole, double-throw (SPDT)
set of dry contacts.

Note: System 450 output relays are SPDT dry contact relays only and do not provide any power source for your controlled environment.

See Technical Specifications for output relay electrical rating information. See the table on page IX for more information about the System 450 control modules with this feature.

Analog Proportional Control

Analog outputs provide proportional analog signals for devices and equipment in your controlled systems. Each analog output can generate either a 4 to 20 mA or 0 to 10 VDC signal. The output signal type is self-selecting; after you connect the analog output to the controlled equipment, it generates the appropriate analog signal for the connected input.

You can set up an analog output to generate a direct acting or reverse acting proportional output signal. You can also set up the output signal strength to increase or decrease in either the direct acting or reverse acting mode. *See the example on page V.*

An analog output's control action is automatically determined by the setup values you select for the Setpoint, End Point, % Output at Setpoint, and % Output at Endpoint values when you set up the output in the UI.

An indicator (control ramp) appears on the output status screen for each analog output to represent the analog outputs control action.

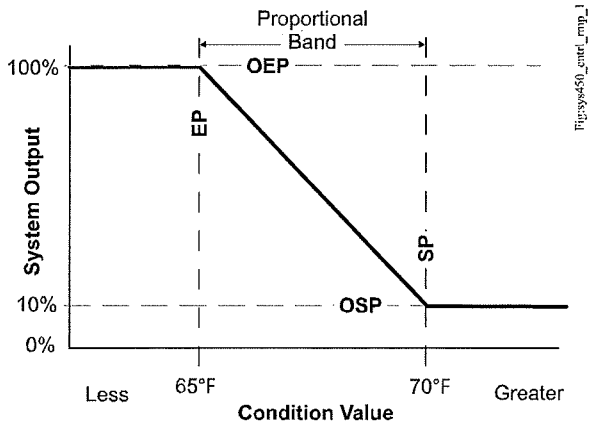

Sensor Type = **°F**
Setpoint (**SP**) = 70 (°F)
Endpoint (**EP**) = 65 (°F)

Setpoint (**SP**) > Endpoint (**EP**)
Output at Setpoint (**OSP**) = 10 (%)
Output at Endpoint (**OEP**) = 100 (%)

Proportional Analog Output Operation for Room Heating (Reverse Acting) Application

See the table on page IX for more information about System 450 control modules with this feature.

Proportional Plus Integral Control

In addition to standard proportional (only) control analog signals, a System 450 control system provides integral control capability and six-time-integral selections that enable you to set up analog outputs to generate a proportional plus integral signal.

Proportional plus integral (PI) control incorporates a time-integral control action with proportional control action. Therefore, if properly set up, a PI control loop can effectively eliminate offset error and enable a controlled system to drive much closer to the desired setpoint, even under large constant loads. On a properly sized system with predictable loads, PI control can maintain the controlled system very close to setpoint.

The integration constant that you select establishes the rate at which the control readjusts the analog output signal. The faster the integration constant, the faster the control readjusts the output signal, and the faster the recovery rate of a properly sized and setup control loop. *See the table on page IX for more information about the System 450 control modules with this feature.*

Multi-Stage On/Off and Proportional Control

You can set up multiple outputs to create a variety of equipment staging control systems. Depending on the control module and expansion modules, a System 450 multi-stage application may use on/off control (relay outputs) or proportional control (analog outputs). *See the table on page IX for more information about the System 450 control modules with this feature.*

High Input Signal Select

The High Input Signal Selection feature enables a System 450 control system to monitor a condition (temperature, pressure, or humidity) with two or three sensors (of the same type) and control relay and analog outputs based on the highest condition value sensed. *See the table on page IX for more information about the System 450 control modules with this feature.*

Differential Control

The Differential Control feature enables a System 450 control system to monitor and maintain a temperature, pressure, or humidity differential between two sensors of the same type. This feature also enables the control system to control relay outputs, analog outputs, or a combination of relay and analog outputs, based on the sensed differential value relative to user-selected differential values. An example is the water pressure drop across an in-line water filter. *See the table on page IX for more information about System 450 control modules with this feature.*

Reset Control

System 450 Reset Control Modules automatically adjust the setpoint for a supply control loop, based on input from the master (outdoor/ambient) sensor and the user-selected reset setpoint settings. This saves energy by using only the required capacity of the supply to heat, cool, dehumidify, or humidify the desired space or environment.

See the example below of Setpoint Reset Control for both a chilled water temperature reset application and a boiler water temperature reset application. See the table on page IX for more information about the System 450 control modules with this feature.

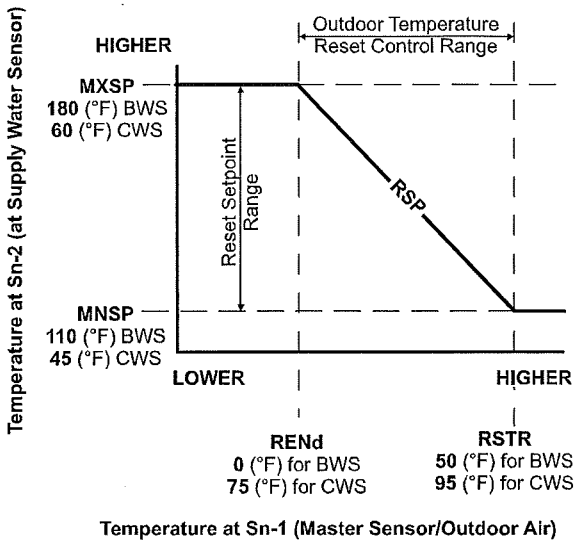

MNSP = Minimum Reset Setpoint
MXSP = Maximum Reset Setpoint
RSTR = Reset Setpoint Start Temperature
RENd = Reset Setpoint End Temperature
RSP = Calculated (Floating) Reset Setpoint

Reset Setpoint Application for Boiler Water Supply and Chiller Water Supply Showing Relationships between the Reset Setpoint Setup Parameters

Setback Scheduling

The reset control module's real-time clock allows you to schedule outputs by day of week and time of day. You can also set up setback temperatures (and humidity) to create an occupied/unoccupied setback schedule for the outputs in your control system. You can select a negative setback value for heating or humidification, or a positive setback value for cooling or dehumidification control. *See the table on page IX for more information about the System 450 control modules with this feature.*



Overview

Run-Time Balancing

The reset control module's run-time balancing feature enables your control system to even out the runtimes of staged equipment by automatically selecting the stage with the least runtime when responding to increases in the system load. Run-time balancing allows control of up to four staged outputs. *See the table on page IX for more information about the System 450 control modules with this feature.*

Analog Output Signal Limiting

The Output Signal Update Rate and Output Deadband features on the control modules with communications are used to reduce the rate at which an analog output updates its output signal strength in response to input signal changes. When controlling a device such as a modulating acutator, these features can reduce the actuator position update frequency, which can lengthen actuator life. *See the table on page IX for more information about the System 450 control modules with this feature.*

Output Signal Update Rate

Allows you to select the rate (in seconds) at which an analog output updates the output signal to the controlled equipment.

Output Signal Deadband

Allows you to create a deadband for the analog output signal within which the output signal strength remains constant.

Binary Input Control for Relay Outputs

You can connect a binary input (a user-supplied pair of dry contacts) to any of the three control module input terminals and control the output relays in your control system based on the binary inputs state (open or closed). Examples of dry contacts include door switches, timers, occupancy sensors, and many more switching devices.

A sensor set up as a binary input can be referenced only by a relay output. Analog outputs cannot reference sensors set up as binary inputs.

On/Off Duration Time Control

Four time control parameters on the control modules with communications allow you to set up the relay outputs with on or off time delays and minimum on or off times.

Hybrid Analog Output Control

Hybrid Analog Output Control, on **C450CPW-100*** control modules, enables an analog VDC output to transition to a pulse output at low signal levels, providing more efficient low-speed control of variable speed electronically commutated (EC) motors in condenser fan applications.

** NOTE: This model was designed for (but is not limited to) controlling an EC motor. By using temperature, humidity, or pressure sensor inputs, this control can also be used for a wide range of additional applications.*



System 450 Control Module Capabilities

Control By:	System 450 Control Modules			
	Standard	Communications	Reset	Hybrid
	C450CPN-3 C450CQN-3 C450CBN-3 C450CCN-3	C450CEN- 1 C450CRN- 1	C450RBN- 3 C450RCN- 3	C450CPW- 100
Controlled Condition				
Temperature	X	X	X	X
Pressure	X	X	-	X
Humidity	X	X	X	X
Combination of Conditions	X	X	X	X
Control Capabilities				
On/Off Relay Control	X	X	X	X
Analog Proportional Control (Direct and Reverse Action)	X	X	X	X
Analog Proportional Plus Integral Control (Direct and Reverse Action)	X	X	X	X
Combination of On/Off Relay and Analog Output Control	X	X	X	X
Stand-Alone Control	X	-	X	X
Multi-Stage Control (Relay or Analog)	X	X	X	X
Network Communications	-	X	-	-
High Input Signal Selection	X	X	-	X
Differential Control	X	X	-	X
Output Signal Limiting Output Signal Update Rate Output Signal Deadband	-	X	-	-
Binary Input Control for Relay Outputs	-	X	-	-
On/Off Duration Time Control	-	X	-	-
Temperature and Humidity Reset Control	-	-	X	-
Scheduling and Temperature Setback Control	-	-	X	-
Reset Setpoint Control	-	-	X	-
Setback Scheduling	-	-	X	-
Run-Time Balancing	-	-	X	-
Hybrid Analog Output Control	-	-	-	X[1]

1. Only on output OUTA1

System 450 Control Modules

The System 450 control module is the supervisor of your control system and the interface for the systems inputs, supply power, and outputs. *The photo below shows an example of an available System 450 control module.*



C450CBN
Standard Control Module

All System 450 control systems require a control module for setting up the control system's inputs and outputs, monitoring the control system's status, and controlling the system's outputs.

System 450 control modules are capable of monitoring up to three inputs and controlling up to ten outputs that can be any combination of relay and analog outputs (provided by expansion modules).

User-Friendly LCD and Touchpad UI

System 450 control modules feature a backlit LCD screen, which during normal operation displays the real-time status of the sensors that are set up in your control system. The four-button touchpad enables you to quickly scroll through and view the output status screens and access the system setup screens to set up or adjust the sensors and outputs in your control system.

After you assemble and power your control system, and select the Sensor Types in the UI, the control module automatically determines the output numbers and output types. The control module then generates the menu-based setup screens and supplies all of the default setup valves required to set up your custom control system.

System 450 Standard Control Modules

System 450 Standard Control Modules can be easily configured out of the box as stand-alone controls, which can provide SPDT control or proportional analog signal control (depending on the model) for a wide range of HVACR applications, as well as commercial process and industrial process applications. The following modules are available:

- C450CBN-3 control module has one SPDT relay output.
- C450CCN-3 control modules have two SPDT relay outputs.
- C450CPN-3 control modules have one analog output (each 0-10 VDC or 4-20 mA).
- C450CQN-3 control modules have two analog outputs (each 0-10 VDC or 4-20 mA).

With a standard control module and the available sensors and transducers, almost any temperature, pressure, or humidity control you may encounter in the field can be quickly replaced with a System 450 control system. *Standard Control Modules provide the capabilities shown in the table on page IX.*

System 450 Control Modules with Communications

A System 450 control module with communications provides the same types of control as the standard control modules. *See System 450 Standard Control Modules. System 450 Control Modules with Communications provide the capabilities shown in the table on page IX.*

C450CEN-1 control modules feature and RJ45 Ethernet network port that enables you to connect your control system to an Ethernet network and communicate across it.

C450CRN-1 control modules feature an RS485 terminal block that enables you to connect your control system to an RS485 Modbus network and communicate on it.

Note: System 450 communications control modules do not provide onboard outputs and require expansion modules to provide outputs.

System 450 Reset Control Modules

C450RBN-3 (one SPDT relay output) and C450RCN-3 (two SPDT relay outputs) Reset Control Modules provide many of the features of the standard control modules for temperature and humidity control. In addition, these modules provide temperature and humidity reset, real-time setback, and run-time balancing capability.

Note: Reset Control Modules control temperature and humidity, but not pressure.

System 450 Hybrid Analog Output Control Modules

A System 450 Hybrid Analog Output Control Module can provide the same types of control as the standard controls, while providing a hybrid analog output control option for your application equipment.

The hybrid C450CPW-100 analog output control feature enables an analog VDC output to transition to a pulse output at low signal levels. This provides more efficient low-speed control of electronically commutated (EC) variable speed motors. These EC variable speed motors are typically used in condenser fan applications on a wide variety of refrigeration and HVAC condensing units.

The onboard analog output can also be configured for High Input Signal Selection, which enables precise and efficient EC motor speed control on multi-circuit condensing units. *System 450 Hybrid Analog Output Control Modules provide the capabilities shown in the table on page IX.*

Other System 450 Components

You can connect up to three inputs (temperature, pressure and humidity) to your System 450 control system, and control up to ten outputs (relay, analog, or a combination of both). This allows you to create a multipurpose control system capable of controlling temperature, pressure, and humidity devices simultaneously.

The System 450 suite of components enables you to build a wide variety of cost-effective, custom control systems that meet your specific application requirements. You do not need to purchase additional and unnecessary features and components associated with packaged control systems, which reduces your control system costs to just the inputs, outputs, and features required by your application.

In addition, a System 450 control system includes:

- One to ten outputs provided by the control module and expansion modules, each output providing either on/off control or a proportional analog signal (0 to 10 VDC or 4 to 20 mA) to the equipment in your controlled system.
- One to three sensors or transducers, which are hard-wired directly to the control module and provide input signals for monitoring and controlling your system equipment.
- An optional power module to provide power to the connected control module and expansion modules.

Expansion Modules



***C450SCN** Relay Expansion Module*

System 450 expansion modules allow you to increase the number of outputs in your control system to meet your application requirements. The following models are available:

- C450SBN-3: Relay Expansion Module with one SPDT relay output
- C450SCN-3: Relay Expansion Module with two SPDT relay outputs
- C450SPN-1: Analog Expansion Module with one analog output
- C450SQN-1: Analog Expansion Module with two analog outputs

Power Module



***C450YNN** Power Module*

System 450 modules require 24 VAC – Class 2 power. In applications where 24 VAC power is not available, the C450YNN-1 Power Module provides a convenient means of transforming 120/240 VAC to 24 VAC to power System 450 modules.

System 450 Compatible Sensors and Transducers

System 450 control modules are designed to operate with a variety of compatible sensors and transducers. The System 450 compatible sensors and transducers cover a wide range of temperature, pressure, and humidity conditions.

System 450 compatible sensors and transducers come in a variety of styles and configurations, allowing you to select the sensor or transducer that best fits your control system requirements.

For ease of installation and setup, the sensor or transducer type selected in the UI automatically determines the sensed condition, unit of measurement, minimum differential, setup value ranges, and the default setup values for each control system output that references the sensor or transducer.

Sensor Options

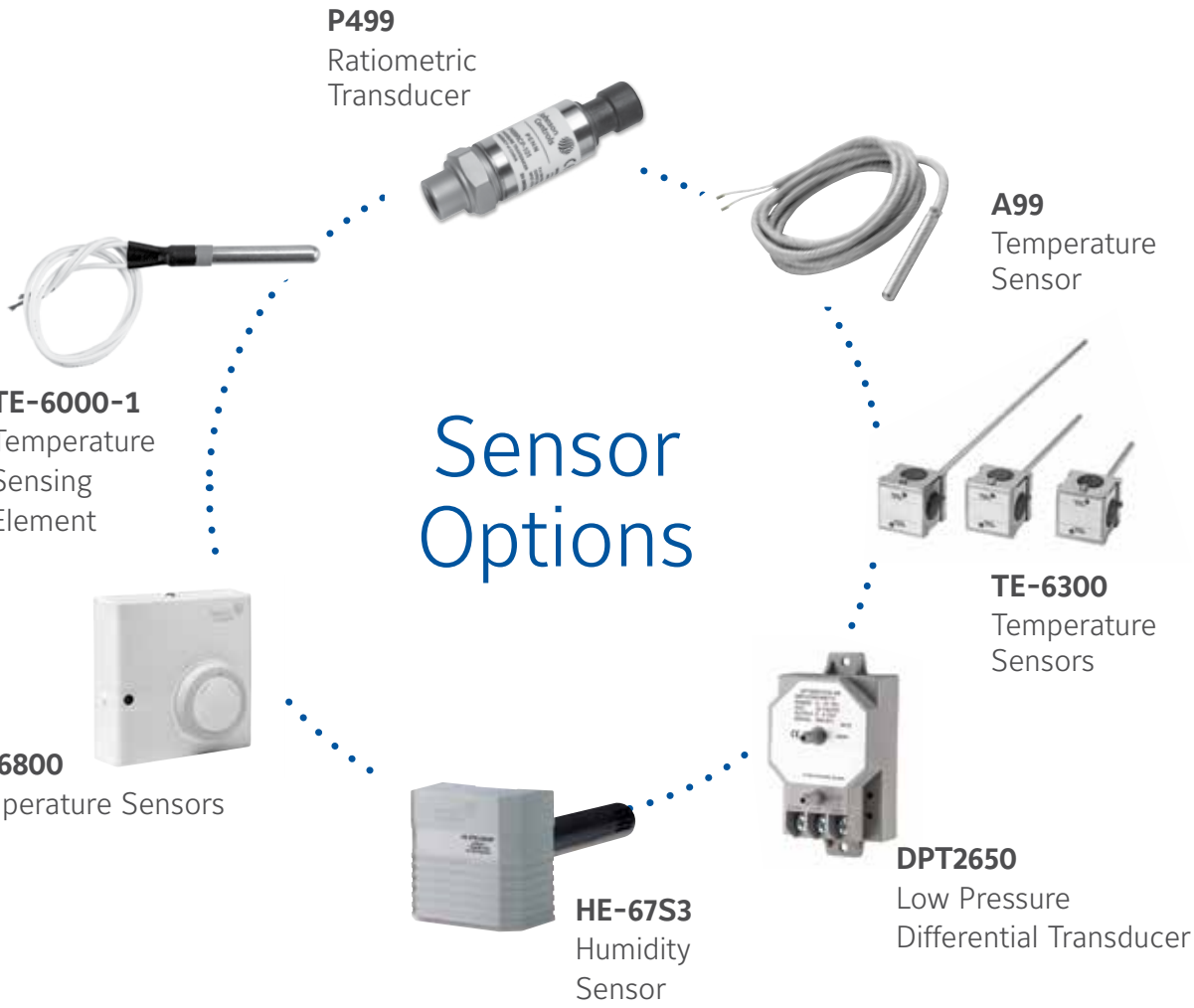

System 450 Modular Electronic Controls Family



Single Relay
Control Module
C450CBN-3



Dual Relay
Control Module
C450CCN-3



Analog
Output Module
C450CPN-3



Dual Analog
Output Module
C450CQN-3



Single Relay
Expansion Module
C450SBN-3



Dual Relay
Expansion Module
C450SCN-3



Analog Output
Expansion Module
C450SPN-1



Dual Analog
Expansion Module
C450SQN-1



Single Relay
Reset Module
C450RBN-3



Dual Relay
Reset Module
C450RCN-3



Hybrid Analog Output and
High Input Signal Select
C450CPW-100



Ethernet
Communications Module
C450CEN-1



RS485 Modbus RTU
Communications Module
C450CRN-1



Power Module
C450YNN-1

BUILDING EFFICIENCY

System 450 Catalog

System 450 Control Series SYS-7
Boiler Application Notes SYS-38
Chiller Application Notes SYS-43
Condenser Rack Application Notes SYS-48
Cooling Tower Application Notes SYS-61
Differential Pressure Application Notes SYS-66
Equal Runtime Application Notes SYS-68
Greenhouse/Humidor/Wine Cellar Application Notes SYS-70
Refrigeration Application Notes SYS-85
Solar Collector Application Notes SYS-89
Additional Application Notes SYS-91

Table of Contents: Catalog Pages

System 450 Control Series SYS-7

System 450™ Series Modular Controls SYS-7

System 450™ Series Control Module with Network Communications SYS-18

System 450™ Reset Control Modules with Real-Time Clock and Relay Output SYS-21

System 450™ Control Modules with Analog Output SYS-23

System 450™ Control Modules with Relay Output SYS-25

System 450™ Control Module with Hybrid Analog Output SYS-27

System 450™ Expansion Modules with Analog Output SYS-29

System 450™ Expansion Modules with Relay Output SYS-31

System 450™ Power Module SYS-33

System 450™ Compatible Sensors, Transducers, and Accessories SYS-34

Table of Contents: Application Notes

Boiler Application Notes SYS-38

Hot Water Supply Loop Reset SYS-38

Chiller Application Notes SYS-43

Chilled Water Supply Loop Reset Using an Actuated Mixing Valve SYS-43

Condenser Rack Application Notes SYS-48

Controlling Head Pressure on a Two-Circuit Condenser with High Input Signal Select SYS-48

Small Refrigeration Rack Controller with Communications SYS-51

Ten-Stage Rack Controller with Ethernet Communications SYS-54

Small Refrigeration Rack Controller with Ethernet Communication SYS-58

Cooling Tower Application Notes SYS-61

Cooling Tower Control with Two-Speed Fan/Low Temperature Lockout SYS-61

Two-Speed Fan Motor Control Using Any Compatible Pressure, Humidity, or Temperature Sensor SYS-64

Differential Pressure Application Notes SYS-66

Differential Control to Replace a Standard Differential Pressure Transmitter SYS-66

Equal Runtime Application Notes SYS-68

Attaining Equal Runtimes on Redundant Mechanical Systems SYS-68

Greenhouse/Humidor/Wine Cellar Application Notes SYS-70

A99 and TE-6000 Temperature Sensor Averaging SYS-70

Proportional Temperature Control of M9200 Series Actuators with Remote Minimum Positioning SYS-72

Room Temperature, Humidity, and Static Pressure Control System with Communications . . SYS-74

Heating and Cooling Control with System Status Indication SYS-78

Proportional Temperature, Pressure, or Humidity Control of an M9100-GGA or M9100-GGC Actuator SYS-80

Proportional Control of a Barber-Colman® MMR-400 Actuator SYS-83

Refrigeration Application Notes SYS-85

Two-Stage Cooling Application with Remote Communications Featuring On Delay Time and Analog Output Limiter Control SYS-85

Solar Collector Application Notes SYS-89

Solar Heating Control Applications with Differential Temperature Control SYS-89

Additional Application Notes SYS-91

Floating Control System Powered by an External Transformer to Control an Actuator SYS-91

Head Pressure Control - Water Source Heat Pump with Analog Output Limiter Control SYS-93

Extending A99 Sensor Cables SYS-97

Code Number Index

A

A99BA-200C *SYS-10*, *SYS-35*
A99BB-200C *SYS-10*, *SYS-35*
A99BB-25C *SYS-10*, *SYS-35*
A99BB-300C *SYS-10*, *SYS-35*
A99BB-500C *SYS-10*, *SYS-35*
A99BB-600C *SYS-10*, *SYS-35*
A99BC-1500C *SYS-10*, *SYS-35*
A99BC-25C *SYS-10*, *SYS-35*
A99BC-300C *SYS-10*, *SYS-35*
A99-CLP-1 . . . . . *SYS-11*, *SYS-35*
ADP11A-600R *SYS-11*, *SYS-35*

B

BKT287-1R *SYS-10*, *SYS-19*, *SYS-22*, *SYS-23*, *SYS-25*, *SYS-28*, *SYS-29*, *SYS-31*, *SYS-33*
BKT287-2R *SYS-10*, *SYS-19*, *SYS-22*, *SYS-23*, *SYS-25*, *SYS-28*, *SYS-29*, *SYS-31*, *SYS-33*
BKT287-3R *SYS-10*, *SYS-19*, *SYS-22*, *SYS-23*, *SYS-25*, *SYS-28*, *SYS-29*, *SYS-31*, *SYS-33*
BKT287-4R *SYS-10*, *SYS-19*, *SYS-22*, *SYS-23*, *SYS-25*, *SYS-28*, *SYS-29*, *SYS-31*, *SYS-33*
BOX10A-600R *SYS-10*, *SYS-35*

C

C450CBN-3C SYS-10, SYS-25
C450CCN-3C SYS-10, SYS-25
C450CEN-1C SYS-10, SYS-19
C450CPN-3C SYS-10, SYS-23
C450CPW-100C SYS-10, SYS-28
C450CQN-3C SYS-10, SYS-23
C450CRN-1C SYS-10, SYS-19
C450RBN-3C SYS-10, SYS-22
C450RCN-3C SYS-10, SYS-22
C450SBN-3C SYS-10, SYS-31
C450SCN-3C SYS-10, SYS-31
C450SPN-1C SYS-10, SYS-29
C450SQN-1C SYS-10, SYS-29
C450YNN-1C SYS-10, SYS-33

D

DPT2650-005D-AB *SYS-11*, *SYS-36*
DPT2650-0R5D-AB *SYS-11*, *SYS-36*
DPT2650-10D-AB *SYS-11*, *SYS-36*
DPT2650-2R5D-AB *SYS-11*, *SYS-36*
DPT2650-R25B-AB *SYS-11*, *SYS-36*

H

HE-67S3-0N00P *SYS-11*, *SYS-36*
HE-67S3-0N0BT *SYS-11*, *SYS-36*
HE-68N2-0N00WS *SYS-11*, *SYS-36*
HE-68N3-0N00WS *SYS-11*, *SYS-36*

P

P499RAP-101C *SYS-12*, *SYS-37*
P499RAP-101K *SYS-12*, *SYS-37*
P499RAP-102C *SYS-12*, *SYS-37*
P499RAP-105C *SYS-12*, *SYS-37*
P499RAP-105K *SYS-12*, *SYS-37*
P499RAP-107C *SYS-12*, *SYS-37*
P499RAP-107K *SYS-12*, *SYS-37*
P499RAPS100C *SYS-12*, *SYS-37*
P499RAPS100K *SYS-12*, *SYS-37*
P499RAPS102C *SYS-12*, *SYS-37*
P499RAPS102K *SYS-12*, *SYS-37*
P499RCP-101C *SYS-12*, *SYS-36*
P499RCP-101K *SYS-12*, *SYS-36*
P499RCP-105C *SYS-12*, *SYS-36*
P499RCP-105K *SYS-12*, *SYS-36*
P499RCP-107C *SYS-12*, *SYS-36*
P499RCP-107K *SYS-12*, *SYS-36*
P499RCP-401C *SYS-12*, *SYS-36*
P499RCP-402C *SYS-12*, *SYS-36*
P499RCP-404C *SYS-12*, *SYS-36*
P499RCP-405C *SYS-12*, *SYS-36*
P499RCPS100C *SYS-12*, *SYS-36*
P499RCPS100K *SYS-12*, *SYS-36*
P499RCPS102C *SYS-12*, *SYS-36*
P499RCPS102K *SYS-12*, *SYS-36*
PLT344-1R *SYS-10*, *SYS-19*, *SYS-22*, *SYS-23*, *SYS-25*, *SYS-28*, *SYS-29*, *SYS-31*, *SYS-33*

Note: Page numbers in *italics* denote pages where the product code number appears, but not as the main part.

S

SHL10A-603R *SYS-11*, *SYS-35*

T

TE-6000-x *SYS-11*, *SYS-35*
TE-6001-1 . . . . . *SYS-11*, *SYS-35*
TE-6001-11 . . . . . *SYS-11*, *SYS-35*
TE-631xx-x *SYS-11*, *SYS-35*
TE-68NT-0N00S *SYS-11*, *SYS-36*

W

WEL11A-601R *SYS-11*, *SYS-35*
WHA-C450-100C . . *SYS-10*, *SYS-19*, *SYS-22*, ... *SYS-23*, *SYS-25*, *SYS-28*, ... *SYS-29*, *SYS-31*, *SYS-33*
WHA-PKD3-200C *SYS-12*, *SYS-37*
WHA-PKD3-400C *SYS-12*, *SYS-37*
WHA-PKD3-600C *SYS-12*, *SYS-37*

Note: Page numbers in *italics* denote pages where the product code number appears, but not as the main part.

System 450™ Series Modular Controls

Description

System 450™ is a family of modular, digital electronic controls that is easily assembled and set up to provide reliable temperature, pressure, and humidity control for a wide variety of HVACR applications, commercial process applications, and industrial process applications.

The System 450 control system is designed to replace System 350™ and System 27 control systems, and to provide many additional features and benefits with fewer than twenty model variations.

System 450 control modules provide a field-configurable out-of-the-box solution. Most System 450 control modules can control temperature, pressure, and humidity systems simultaneously.

System 450 Control Modules with Communications enable you to connect System 450 control systems to Modbus® or Ethernet networks for remote monitoring and setup. The Modbus communications control module is an RS485, RTU-compliant subordinate device. The Ethernet communications control module has an integral web server that can deliver web pages by means of a direct connection, on your LAN, or across the Internet.

System 450 Reset Control Modules provide many of the features of the standard models for temperature and humidity control. In addition, these modules provide setpoint reset, real-time setback scheduling, and run-time balancing (equal run time) capability.

The System 450 Control Module with Hybrid Analog Output has a single self-selecting analog output to optimize and extend the controlled speed range of variable speed electronically commutated (EC) motors.

Refer to the following documents for important product application information.

- *System 450™ Series Modular Controls Product Bulletin (LIT-12011458)*
- *System 450™ Series Modular Control Systems with Standard Control Modules Technical Bulletin (LIT-12011459)*
- *System 450™ Series Modular Control Systems with Reset Control Modules Technical Bulletin (LIT-12011842)*
- *System 450™ Series Modular Control Systems with Communications Control Modules Technical Bulletin (LIT-12011826)*

Features

- Durable, compact, interchangeable modular components with plug-together connectors and DIN rail or direct wall mount capability eliminate field wiring between modules and allow you to quickly and easily design, assemble, install, and upgrade your control systems.
- Versatile, multipurpose, field-configurable control modules and expansion modules designed for global use allow you to create a wide variety of application-specific control systems capable of controlling temperature, pressure, or humidity, or all three conditions simultaneously, with only a small suite of module models.
- Up to three hard-wired input sensors and up to ten relay or analog outputs (in any combination) per control system allow you to build complex custom control systems while reducing your control system cost to only the cost of the required components.
- Control Modules with bright backlit LCDs and four-button touch pad user interfaces provide quick, clear, visual status of your System 450 control system inputs and outputs with the touch of a button and enable you to quickly and easily set up and adjust your control system.



System 450 Control System with a Control, Power, and Expansion Module

- Multipurpose, all-in-one control modules enable simple stand-alone, single-module control systems that are temperature, pressure, and humidity capable out of the box and easy to set up in the field to replace a wide variety of OEM HVACR and process controls.
- An extensive suite of compatible temperature and humidity sensors, and pressure transducers allows you to monitor and control a wide range of HVACR and process conditions in a variety of standard and global units of measurement.
- High input signal selection enables your control system to monitor a temperature, pressure, or humidity condition with two or three sensors (of the same type) and control your system outputs based on the highest condition value sensed by the referenced sensors.
- Differential control enables your control system to monitor and maintain a temperature, pressure, or humidity differential between two sensor points within a system, process, or space.

The Reset Control modules have additional features:

- Adjustable minimum and maximum setpoint temperatures (reset control modules only) enable compliance with the manufacturer's specifications for your controlled HVACR and process equipment.
- Selectable shutdown-high and shutdown-low temperature settings (reset control modules only) saves you energy by shutting down controlled equipment when the ambient temperature either rises or drops to a point where heating or cooling is no longer required.
- Real time clock and adjustable setback temperature (reset control modules only) save you energy by setting back heating, cooling, or humidity setpoints during scheduled unoccupied periods (24-hour day, 7-day week schedule).
- User-defined reset control capability (reset control modules only) saves you energy in a wide variety of temperature and humidity reset control applications by adjusting the temperature or humidity control loop, based on changes in ambient outdoor temperature or other uncontrolled condition.

The performance specifications are nominal and conform to acceptable industry standards. For applications at conditions beyond these specifications, consult the local Johnson Controls office. Johnson Controls, Inc. shall not be liable for damages resulting from misapplication or misuse of its products. © 2015 Johnson Controls, Inc.

System 450™ Series Modular Controls (Continued)

The Control Modules with Communications have additional features:

- Ethernet communication capability through a built-in web server (Ethernet Control Modules only) allows you to monitor your control system status and set up or change the parameters by means of a direct Ethernet cable connection, through a LAN connection, or over the Internet. The built in web server delivers user-friendly web pages to client browsers on a desktop, laptop, tablet, or smart device.
- The Web page server on Ethernet communication modules provides a simple, intuitive web interface for easy remote monitoring, setup, adjustment and remote monitoring of your control systems across Ethernet networks.
- RS485, RTU-compliant Modbus® network communication capability (Modbus control modules only) enables a head-end RS485 Modbus master controller to read and write control system status and setup parameters to the System 450 Modbus communication control module.
- Password protection for local access (Ethernet and Modbus control modules only) and password protection for remote access (Ethernet control module only) deters unauthorized changes to the control system settings, but allows local and remote monitoring of your control system status.
- Analog output signal limiting features (communication control modules only) allow you to select the rate and condition range at which the control updates the analog output signal, potentially reducing wear on the controlled equipment.
- Binary input with time delay (communication control modules only) allows you to use an external set of dry contacts and selectable time delays to control relay outputs.

Applications

You can create a wide variety of custom, application-specific control systems with System 450 modules. The following are some common control application examples:

- Temperature control
- Pressure control
- Humidity control
- Multipurpose control
- Reset and setback control
- High input-signal selection
- Differential control

Temperature Control

- Temperature monitoring and alarming
- On/Off staged control of boilers and chillers
- Proportional stage control of boilers and chillers
- Boiler and chiller pump control
- Heating and cooling control with deadband
- Floating temperature control of damper and valve actuators
- Cooling tower fan speed/stage control based on water temperature
- Supply, make-up, and mixed air temperature control
- Temperature actuated valve control
- Supply and make-up air damper and fan control
- Condenser fan staging or speed control based on condenser temperature

Refrigerant Pressure Control

- Condenser fan cycling and stage control
- Multispeed condenser fan control
- Floating pressure control of damper and valve actuators
- Condenser fan speed and damper control
- High and low pressure cutout control
- Staged compressor control
- Cooling tower fan speed control based on high-side pressure
- Direct speed control of electronically commutated (EC) condenser fan motors (C450CPW-100 model)

Other Pressure Control

- Relief damper and fan control for building pressurization
- Constant static pressure control

Humidity Control

- On/Off humidification and dehumidification control
- Proportional humidification and dehumidification control
- Multistage humidification and dehumidification control
- Humidity monitoring and alarming

Multipurpose Control

- Temperature and pressure based refrigeration rack control
- Temperature and humidity control of wine cellars and greenhouses
- Temperature, humidity, and static pressure control of clean rooms and greenhouses
- Dehumidification with reheat control

Reset Control

- Boiler supply water temperature reset control based on outside air temperature
- Chiller supply water temperature reset control based on outside air temperature
- VAV zone temperature control based on outside air temperature
- Humidity reset based on outside air temperature
- Staged applications with runtime balancing
- Real-time Occupied/Unoccupied Setback

High Input Signal Selection

- Pressure-based fan speed or fan cycling control on multi-circuit condensers
- Temperature-based fan speed or fan cycling control on multi-circuit condensers

Differential Control

- Air and fluid pump-flow monitoring and alarming
- Air and fluid filter status monitoring and alarming
- Chiller barrel flow monitoring, control, and alarming
- Solar air and water heating applications

Note: Communications modules add network communication to any application of your choosing, except those requiring reset, setback, or EC motor control.

Repair Information

If a System 450 module fails to operate within its specifications, replace the module. For a replacement module, contact your Johnson Controls® representative.

The performance specifications are nominal and conform to acceptable industry standards. For applications at conditions beyond these specifications, consult the local Johnson Controls office. Johnson Controls, Inc. shall not be liable for damages resulting from misapplication or misuse of its products. © 2015 Johnson Controls, Inc.

System 450™ Series Modular Controls (Continued)

System 450 Control Module Capabilities

Control by _____	System 450 Control Modules			
	Standard	Communications	Reset	Hybrid
	C450CPN-3C C450CQN-3C C450CBN-3C C450CCN-3C	C450CEN-1C C450CRN-1C	C450RBN-3C C450RCN-3C	C450CPW-100C
Controlled Condition				
Temperature	X	X	X	X
Pressure	X	X	-	X
Humidity	X	X	X	X
Combination of Conditions	X	X	X	X
Control Capabilities				
On/Off Relay Control	X	X	X	X
Analog Proportional Control (Direct and Reverse Action)	X	X	X	X
Analog Proportional Plus Integral Control (Direct and Reverse Action)	X	X	X	X
Combination of On/Off Relay and Analog Output Control	X	X	X	X
Stand-Alone Control	X	-	X	X
Multi-Stage Control (Relay or Analog)	X	X	X	X
Network Communications	-	X	-	-
High Input Signal Selection	X	X	-	X
Differential Control	X	X	-	X
Output Signal Limiting Output Signal Update Rate Output Signal Deadband	-	X	-	-
Binary Input Control for Relay Outputs	-	X	-	-
On/Off Duration Time Control	-	X	-	-
Temperature and Humidity Reset Control	-	-	X	-
Scheduling and Temperature Setback Control	-	-	X	-
Reset Setpoint Control	-	-	X	-
Setback Scheduling	-	-	X	-
Run-Time Balancing	-	-	X	-
Hybrid Analog Output Control	-	-	-	X[1]

1. Only on output OUTA1.

The performance specifications are nominal and conform to acceptable industry standards. For applications at conditions beyond these specifications, consult the local Johnson Controls office. Johnson Controls, Inc. shall not be liable for damages resulting from misapplication or misuse of its products. © 2015 Johnson Controls, Inc.

System 450™ Series Modular Controls (Continued)

Selection Charts

System 450 Modules and Accessories Ordering Information

Product Code Number	Product Description
C450CBN-3C	Standard Control Module with LCD, Four-Button Touchpad UI, and Relay Output; provides one relay output (SPDT line-voltage relay) for SPDT control.
C450CCN-3C	Standard Control Module with LCD, Four-Button Touchpad UI, and Relay Output; provides two relay outputs (SPDT line-voltage relays) for SPDT control.
C450CEN-1C	Control Module with Ethernet Communications, LCD, and Four-Button Touchpad UI. (No onboard outputs available on control modules with network communications capabilities.)
C450CPN-3C	Standard Control Module with LCD, Four-Button Touchpad UI, and Analog Output; provides one analog output (0–10 VDC or 4–20 mA self-selecting signal) for proportional control.
C450CPW-100C	Hybrid Analog Output Control Module with LCD, Four-Button Touchpad UI, Hybrid Analog Output and Optional High Input Signal Select; provides one hybrid analog output and optional high input signal select primarily used for variable-speed EC motor speed control. Only Analog Output 1 (OUTA1) can be configured as a hybrid analog output and/or use the High Input Signal Selection feature. These features are not available for any of the other outputs in a System 450 control system that uses the C450CPW-100C as the control module.
C450CQN-3C	Standard Control Module with LCD and Four-Button Touchpad UI, and Analog Output; provides two analog outputs (0–10 VDC or 4–20 mA self-selecting signals) for proportional control.
C450CRN-1C	Control Module with RS485 Modbus Communications, LCD, and Four-Button Touchpad UI. (No onboard outputs available on control modules with network communications capabilities.)
C450RBN-3C	Reset Control Module with LCD, Four-Button Touchpad UI, and SPDT relay output; provides one SPDT output relay. One A99BC-25C temperature sensor with 0.25 m (9-1/4 in.) silicon leads and one A99BC-300C temperature sensor with 3 m (9 ft 10 in.) silicon leads are included in the box with the Reset Control Module.
C450RCN-3C	Reset Control Module with LCD, Four-Button Touchpad UI, and SPDT relay output; provides two SPDT output relays. One A99BC-25C temperature sensor with 0.25 m (9-1/4 in.) silicon leads and one A99BC-300C temperature sensor with 3 m (9 ft 10 in.) silicon leads are included in the box with the Reset Control Module.
C450SBN-3C	Relay Output Expansion Module; provides one SPDT line-voltage relay output.
C450SCN-3C	Relay Output Expansion Module; provides two SPDT line-voltage relay outputs.
C450SPN-1C	Analog Output Expansion Module; provides one analog output (0–10 VDC or 4–20 mA self-selecting signal) for proportional control.
C450SQN-1C	Analog Output Expansion Module; provides two analog outputs (0–10 VDC or 4–20 mA self-selecting signals) for proportional control.
C450YNN-1C	Power Module; provides 24 V to System 450 Module Assembly; 120 VAC or 240 VAC supply power input terminals.
BKT287-1R	DIN Rail; 0.30 m (12 in.) long
BKT287-2R	DIN Rail; 1 m (39-1/3 in.) long
BKT287-3R	DIN Rail; 0.61 m (24 in.) long
BKT287-4R	DIN Rail; 0.36 m (14 in.) long
PLT344-1R	DIN Rail End Clamps (2 clamps)
WHA-C450-100C	System 450 module connection extension cable, 100 cm (3.3 ft) long

System 450 Compatible A99B Temperature Sensors and Accessories Ordering Information[1] (Part 1 of 2)

Product Code Number	Product Description
A99BA-200C	PTC Silicon Sensor with Shielded Cable; Cable Length 2 m (6-1/2 ft); Sensor Temperature Range: -40 to 120°C (-40 to 250°F) Cable Jacket Temperature Range: -40 to 100°C (-40 to 212°F)
A99BB-25C	PTC Silicon Sensor with PVC Cable; Cable Length 0.25 m (9-3/4 in.); Sensor Temperature Range: -40 to 120°C (-40 to 250°F) Cable Jacket Temperature Range: -40 to 100°C (-40 to 212°F)
A99BB-200C	PTC Silicon Sensor with PVC Cable; Cable Length 2 m (6-1/2 ft); Sensor Temperature Range: -40 to 120°C (-40 to 250°F) Cable Jacket Temperature Range: -40 to 100°C (-40 to 212°F)
A99BB-300C	PTC Silicon Sensor with PVC Cable; Cable Length 3 m (9-3/4 ft); Sensor Temperature Range: -40 to 120°C (-40 to 250°F) Cable Jacket Temperature Range: -40 to 100°C (-40 to 212°F)
A99BB-500C	PTC Silicon Sensor with PVC Cable; Cable Length 5 m (16-3/8 ft); Sensor Temperature Range: -40 to 120°C (-40 to 250°F) Cable Jacket Temperature Range: -40 to 100°C (-40 to 212°F)
A99BB-600C	PTC Silicon Sensor with PVC Cable; Cable Length 6 m (19-1/2 ft); Sensor Temperature Range: -40 to 120°C (-40 to 250°F) Cable Jacket Temperature Range: -40 to 100°C (-40 to 212°F)
A99BC-25C	PTC Silicon Sensor with High Temperature Silicon Cable; Cable Length 0.25 m (9-3/4 in.); Sensor Temperature Range: -40 to 120°C (-40 to 250°F) Cable Jacket Rated for Full Sensor Temperature Range.
A99BC-300C	PTC Silicon Sensor with High Temperature Silicon Cable; Cable Length 3 m (9-3/4 ft) Sensor Temperature Range: -40 to 120°C (-40 to 250°F) Cable Jacket Rated for Full Sensor Temperature Range.
A99BC-1500C	PTC Silicon Sensor with High Temperature Silicon Cable; Cable Length 15 m (49 ft) Sensor Temperature Range: -40 to 120°C (-40 to 250°F) Cable Jacket Rated for Full Sensor Temperature Range.
BOX10A-600R	PVC Enclosure for A99 Sensor; Includes Wire Nuts and Conduit Connector (for Outdoor Sensor)

The performance specifications are nominal and conform to acceptable industry standards. For applications at conditions beyond these specifications, consult the local Johnson Controls office. Johnson Controls, Inc. shall not be liable for damages resulting from misapplication or misuse of its products. © 2015 Johnson Controls, Inc.

System 450™ Series Modular Controls (Continued)

System 450 Compatible A99B Temperature Sensors and Accessories Ordering Information[1] (Part 2 of 2)

Product Code Number	Product Description
WEL11A-601R	Immersion Well for A99 Sensor Liquid Sensing Applications
A99-CLP-1	Mounting Clip for A99 Temperature Sensor
ADP11A-600R	Conduit Adaptor, 1/2 in. Snap-Fit EMT Conduit Adaptor (box of 10)
TE-6001-1	Duct Mounting Hardware with Handy Box for A99 Sensor
TE-6001-11	Duct Mounting Hardware without Handy Box for A99 Sensor
SHL10A-603R	Sun Shield (for Use with Outside A99 Sensors in Sunny Locations)

1. Refer to the *A99B Series Temperature Sensors Product/Technical Bulletin (LIT-125186)* on the Johnson Controls® Product Literature website for more information.

System 450 Compatible TE-6000 Series 1,000 Ohm Nickel Temperature Sensors and Accessories Ordering Information

Product Code Number	Product Description
TE-6000-x	TE6000 Series 1,000 ohm at 70°F nickel temperature sensors (only). Only the TE-6000-6 sensor can be used for the entire HI°C and HI°F temperature range. Different sensing element packages are available for various applications. For a complete list of compatible 1,000 ohm nickel sensors, including sensor descriptions, technical specifications, and mounting accessories, refer to the *TE-6000 Series Temperature Sensing Elements Product Bulletin (LIT-216288)*. (System 450 Sensor Types HI°C and HI°F)

System 450 Compatible TE-6300 Series 1,000 Ohm Nickel Temperature Sensors and Accessories Ordering Information

Product Code Number	Product Description
TE-631xx-x	TE6300 Series 1,000 ohm at 70°F nickel averaging and 1,000 ohm thin-film nickel temperature sensors (only). For a complete list of compatible 1,000 ohm nickel averaging and thin-film nickel sensors, including sensor descriptions, technical specifications, and mounting accessories, refer to the *TE-6300 Series Temperature Sensors Product Bulletin (LIT-216320)*. (System 450 Sensor Types HI°C and HI°F)

System 450 Compatible TE-68NT-0N00S 1,000 Ohm Nickel Temperature Sensor Ordering Information

Product Code Number	Product Description
TE-68NT-0N00S	TE6800 Series 1,000 ohm nickel temperature sensor for wall-mount applications. For more information, including sensor description, technical specifications, and mounting accessories, refer to the *TE-6800 Series Temperature Sensors Product Bulletin (LIT-12011542)*. (System 450 Sensor Types HI°C and HI°F**)**

System 450 Compatible HE67S3 Type Humidity Sensors with Integral A99B Temperature Sensor Ordering Information[1]

Product Code Number	Product Description
HE-67S3-0N0BT	Wall Mount Humidity Sensor with A99B Type Temperature Sensor: 10 to 90% RH; 0 to 60°C (32 to 140°F)
HE-67S3-0N00P	Duct Mount Humidity Sensor with A99B Type Temperature Sensor: 10 to 90% RH; 0 to 60°C (32 to 140°F)

1. The HE-67S3 sensors require 24 VAC input and must use the 0–5 VDC output. Refer to the *TrueRH Series HE-67xx Humidity Element with Temperature Sensors Product Bulletin (LIT-216245)* on the Johnson Controls Product Literature website for more information, including technical specifications and mounting accessories.

System 450 Compatible HE6800 Series Humidity Transmitters with Temperature Sensor Ordering Information[1]

Product Code Number	Product Description
HE-68N2-0N00WS	Wall Mount Humidity Transmitter with Nickel Temperature Sensor: 10 to 90 ±2% RH; 0 to 55°C (32 to 131°F)
HE-68N3-0N00WS	Wall Mount Humidity Transmitter with Nickel Temperature Sensor: 10 to 90 ±3% RH; 0 to 55°C (32 to 131°F)

1. The HE-6800 transmitters require 24 VAC input and must use the 0–5 VDC output. Refer to the *HE-6800 Series Humidity Transmitters with Temperature Sensor Product Bulletin (LIT-12011625)* on the Johnson Controls Product Literature website for more information, including technical specifications and mounting accessories.

System 450 Compatible Low Pressure Differential Transducer Ordering Information[1] [2]

Product Code Number	Product Description
DPT2650-R25B-AB	Low Pressure Differential Transducer: -0.25 to 0.25 in. W.C. (System 450 Sensor Type: **P 0.25**)[3]
DPT2650-0R5D-AB	Low Pressure Differential Transducer: 0 to 0.5 in. W.C. (System 450 Sensor Type: **P 0.5**)
DPT2650-2R5D-AB	Low Pressure Differential Transducer: 0 to 2.5 in. W.C. (System 450 Sensor Type: **P 2.5**)
DPT2650-005D-AB	Low Pressure Differential Transducer: 0 to 5.0 in. W.C. (System 450 Sensor Type: **P 5**)
DPT2650-10D-AB	Low Pressure Differential Transducer: 0 to 10 in. W.C. (System 450 Sensor Type: **P 10**)

1. Refer to the *Setra Systems Model DPT265 Very Low Differential Pressure Transducer Catalog Page* on the Johnson Controls Product Literature website for more information.
2. The DPT265 sensors require 24 VAC input and must use the 0–5 VDC output. Refer to the *Setra Systems Model DPT265 Very Low Differential Pressure Transducer Catalog Page* on the Johnson Controls Product Literature website for more information.
3. Used only with Communications Control Modules.

The performance specifications are nominal and conform to acceptable industry standards. For applications at conditions beyond these specifications, consult the local Johnson Controls office. Johnson Controls, Inc. shall not be liable for damages resulting from misapplication or misuse of its products. © 2015 Johnson Controls, Inc.

System 450™ Series Modular Controls (Continued)

System 450 Compatible P499 Series Transducers with 1/4 in. SAE 45 Flare Internal Thread with Depressor (Style 47) Ordering Information[1]

Product Code Number	Product Description
P499RCP-401C	-1 to 8 bar; order WHA-PKD3 type wire harness separately
P499RCP-402C	-1 to 15 bar; order WH A-PKD3 type wire harness separately
P499RCP-404C	0 to 30 bar; order WHA-PKD3 type wire harness separately
P499RCP-405C	0 to 50 bar; order WHA-PKD3 type wire harness separately
P499RCPS100C	-10 to 100 psis (sealed for wet and freeze/thaw applications); order WHA-PKD3 type wire harness separately
P499RCPS100K	-10 to 100 psis (sealed for wet and freeze/thaw applications); WHA-PKD3-200C wire harness included
P499RCPS102C	0 to 200 psis (sealed for wet and freeze/thaw applications); order WHA-PKD3 type wire harness separately
P499RCPS102K	0 to 200 psis (sealed for wet and freeze/thaw applications); WHA-PKD3-200C wire harness included
P499RCP-101C	0 to 100 psig; order WHA-PKD3 type wire harness separately
P499RCP-101K	0 to 100 psig; WHA-PKD3-200C wire harness included
P499RCP-105C	0 to 500 psig; order WHA-PKD3 type wire harness separately
P499RCP-105K	0 to 500 psig; WHA-PKD3-200C wire harness included
P499RCP-107C	0 to 750 psig; order WHA-PKD3 type wire harness separately
P499RCP-107K	0 to 750 psig; WHA-PKD3-200C wire harness included

1. The P499 sensors must be powered with the +5 VDC and C terminals and the output is 0.5 to 4.5 VDC. Refer to the *P499 Series Electronic Pressure Transducers Product/Technical Bulletin (LIT-12011190)* on the Johnson Controls Product Literature website for more information.

System 450 Compatible P499 Series Transducers with 1/8 in. 27 NPT External Thread (Style 49) Ordering Information[1]

Product Code Number	Product Description
P499RAPS100C	-10 to 100 psis (sealed for wet and freeze/thaw applications); order WHA-PKD3 type wire harness separately
P499RAPS100K	-10 to 100 psis (sealed for wet and freeze/thaw applications); WHA-PKD3-200C wire harness included
P499RAPS102C	0 to 200 psis (sealed for wet and freeze/thaw applications); order WHA-PKD3 type wire harness separately
P499RAPS102K	0 to 200 psis (sealed for wet and freeze/thaw applications); WHA-PKD3-200C wire harness included
P499RAP-101C	0 to 100 psig; order WHA-PKD3 type wire harness separately
P499RAP-101K	0 to 100 psig; WHA-PKD3-200C wire harness included
P499RAP-102C	0 to 200 psig; order WHA-PKD3 type wire harness separately
P499RAP-105C	0 to 500 psig; order WHA-PKD3 type wire harness separately
P499RAP-105K	0 to 500 psig; WHA-PKD3-200C wire harness included
P499RAP-107C	0 to 750 psig; order WHA-PKD3 type wire harness separately
P499RAP-107K	0 to 750 psig; WHA-PKD3-200C wire harness included

1. The P499 sensors must be powered with the +5 VDC and C terminals and the output is 0.5 to 4.5 VDC. Refer to the *P499 Series Electronic Pressure Transducers Product/Technical Bulletin (LIT-12011190)* on the Johnson Controls Product Literature website for more information.

WHA-PKD3 Wire Harnesses Ordering Information[1]

Product Code Number	Product Description
WHA-PKD3-200C	Plug and 3-Wire Harness for P499 Electronic Pressure Transducers: 2.0 m (6-1/2 ft) cable
WHA-PKD3-400C	Plug and 3-Wire Harness for P499 Electronic Pressure Transducers: 4.0 m (13 ft) cable
WHA-PKD3-600C	Plug and 3-Wire Harness for P499 Electronic Pressure Transducers: 6.0 m (19-5/8 ft) cable

1. Refer to the *P499 Series Electronic Pressure Transducers Product/Technical Bulletin (LIT-12011190)* on the Johnson Controls Product Literature website for more information.

Technical Specifications

C450CPN-3C and C450CQN-3C Control Modules with Analog Output (Part 1 of 2)

Product	C450CPN-3C and C450CQN-3C: System 450 Control Module models are sensing controls and operating controls with LCD, four-button touchpad, and SPDT analog output C450CPN-3C: Control Module with one analog output C450CQN-3C: Control Module with two analog outputs
Power Consumption	C450CPN-3C: 1.3 VA maximum using 0–10 V out; 1.5 VA maximum using 4–20 mA out C450CQN-3C: 2.0 VA maximum using 0–10 V out; 2.4 VA maximum using 4–20 mA out
Supply Power	**Internal Supply Power:** C450YNN-1C Power Supply Module **External Supply Power:** 24 VAC (20–30 VAC) Safety Extra-Low Voltage (SELV) (Europe), Class 2 (North America), 50/60 Hz, 10 VA minimum **Note:** A System 450 control module or module assembly can use an internal or an external supply power source, but must not be connected to both simultaneously.

The performance specifications are nominal and conform to acceptable industry standards. For applications at conditions beyond these specifications, consult the local Johnson Controls office. Johnson Controls, Inc. shall not be liable for damages resulting from misapplication or misuse of its products. © 2015 Johnson Controls, Inc.

System 450™ Series Modular Controls (Continued)

C450CPN-3C and C450CQN-3C Control Modules with Analog Output (Part 2 of 2)

Ambient Operating Conditions	**Temperature:** -40 to 66°C (-40 to 150°F) when using 0–10 VDC outputs; -40 to 40°C (-40 to 104°F) when using 4–20 mA outputs **Humidity:** Up to 95% RH noncondensing; maximum dew point 29°C (85°F)
Ambient Shipping and Storage Conditions	**Temperature:** -40 to 80°C (-40 to 176°F) **Humidity:** Up to 95% RH noncondensing; maximum dew point 29°C (85°F)
Input Signal	0–5 VDC for humidity sensors and static pressure transducers 0.5–4.5 VDC for ratiometric pressure transducers 1,035 ohms at 25°C (77°F) for A99 PTC temperature sensors 1,000 ohms at 21.1°C (70°F) for TE-6xxx Nickel temperature sensors
Analog Output	**Voltage Mode (0–10 VDC):** 10 VDC maximum output voltage 10 mA maximum output current Requires an external load of 1,000 ohms or more The AO operates in Voltage Mode when connected to devices with impedance greater than 1,000 ohms. Devices that fall below 1,000 ohms may not operate as intended with Voltage Mode applications.
	Current Mode (4–20 mA): Requires an external load between 0–300 ohms The AO operates in Current Mode when connected to devices with impedance less than 300 ohms. Devices that rise above 300 ohms may not operate as intended with Current Mode applications.
Analog Input Accuracy	**Resolution:** 14 bits
Control Construction	Independently mounted control, surface mounted with Lexan® 950 enclosure suitable for DIN rail mounting or direct mounting to a hard, even surface.
Dimensions (H x W x D)	127 x 61 x 61 mm (5 x 2-3/8 x 2-3/8 in.)
Weight	C450CPN-3C: 195 g (0.43 lb) C450CQN-3C: 195 g (0.43 lb)
Compliance CE	**North America:** cULus Listed; UL 60730, File E27734; FCC Compliant to CFR47, Part 15, Subpart B, Class B Industry Canada (IC) Compliant to Canadian ICES-003, Class B limits
	Europe: CE Mark – Johnson Controls, Inc. declares that this product is in compliance with the essential requirements and other relevant provisions of the EMC Directive and the Low Voltage Directive.
	Australia: Mark: C-Tick Compliant (N1813)

C450CEN-1C Control Module with Ethernet Communications

Product	C450CEN: System 450 control modules are sensing controls and operating controls with LCD and four-button touchpad UI, Ethernet communications capability, and no outputs. C450CEN-1C: Control module with Ethernet communications capability
Supply Power	**Internal Supply Power:** C450YNN-1C Power Supply Module **External Supply Power:** 24 VAC (20–30 VAC) Safety Extra-Low Voltage (SELV) (Europe), Class 2 (North America), 50/60 Hz, 10 VA minimum **Note:** A System 450 control module or module assembly can use an internal or an external supply power source, but must not be connected to both simultaneously.
Ambient Operating Conditions	**Temperature:** -40 to 66°C (-40 to 150°F) **Humidity:** Up to 95% RH noncondensing; maximum dew point 29°C (85°F)
Ambient Shipping and Storage Conditions	**Temperature:** -40 to 80°C (-40 to 176°F) **Humidity:** Up to 95% RH noncondensing; maximum dew point 29°C (85°F)
Input Signal	0–5 VDC; 1,035 ohms at 25°C (77°F) for an A99 PTC Temperature Sensor
Analog Input Accuracy	**Resolution:** 16 bits
Control Construction	Independently mounted control, surface mounted with Lexan® 950 enclosure suitable for DIN rail mounting or direct mounting to a hard, even surface.
Dimensions (H x W x D)	127 x 63 x 63 mm (5 x 2-3/8 x 2-3/8 in.)
Weight	C450CEN-1C: 207 g (0.46 lb)
Compliance CE	**North America:** cULus Listed; UL 60730, File E27734; FCC Compliant to CFR47, Part 15, Subpart B, Class B Industry Canada (IC) Compliant to Canadian ICES-003, Class B limits
	Europe: CE Mark – Johnson Controls, Inc. declares that this product is in compliance with the essential requirements and other relevant provisions of the EMC Directive; Low Voltage Directive; CISPR22, class B.
	Australia: Mark: C-Tick Compliant (N1813)

The performance specifications are nominal and conform to acceptable industry standards. For applications at conditions beyond these specifications, consult the local Johnson Controls office. Johnson Controls, Inc. shall not be liable for damages resulting from misapplication or misuse of its products. © 2015 Johnson Controls, Inc.

System 450™ Series Modular Controls (Continued)

C450CRN-1C Control Module with RS485 Modbus Communications

Product	C450CRN-1C: System 450 control modules are sensing controls and operating controls with LCD and four-button touchpad UI and no outputs. This control module is an RS485, RTU compliant Modbus subordinate device.
Supply Power	**Internal Supply Power:** C450YNN-1C Power Supply Module **External Supply Power:** 24 VAC (20–30 VAC) Safety Extra-Low Voltage (SELV) (Europe), Class 2 (North America), 50/60 Hz, 10 VA minimum **Note:** A System 450 control module or module assembly can use an internal or an external supply power source, but must not be connected to both simultaneously.
Ambient Operating Conditions	**Temperature:** -40 to 66°C (-40 to 150°F) **Humidity:** Up to 95% RH noncondensing; maximum dew point 29°C (85°F)
Ambient Shipping and Storage Conditions	**Temperature:** -40 to 80°C (-40 to 176°F) **Humidity:** Up to 95% RH noncondensing; maximum dew point 29°C (85°F)
Input Signal	0–5 VDC; 1,035 ohms at 25°C (77°F) for an A99 PTC Temperature Sensor
Analog Input Accuracy	**Resolution:** 16 bits
Control Construction	Independently mounted control, surface mounted with Lexan® 950 enclosure suitable for DIN rail mounting or direct mounting to a hard, even surface.
Dimensions (H x W x D)	127 x 63 x 63 mm (5 x 2-3/8 x 2-3/8 in.)
Weight	C450CRN-1C: 207 g (0.46 lb)
Compliance CE	**North America:** cULus Listed; UL 60730, File E27734: FCC Compliant to CFR47, Part 15, Subpart B, Class B Industry Canada (IC) Compliant to Canadian ICES-003, Class B limits
	Europe: CE Mark – Johnson Controls, Inc. declares that this product is in compliance with the essential requirements and other relevant provisions of the EMC Directive; Low Voltage Directive; CISPR22, class B
	Australia: Mark: C-Tick Compliant (N1813)

C450CPW-100C Control Module with Hybrid Analog Output

Product	C450CPW-100C System 450 control module is a sensing control and operating control with LCD, four-button touchpad, and analog output with pulse-width modulation capability.
Power Consumption	C450CPW-100C: 1.3 VA maximum using 0–10 V out; 1.5 VA maximum using 4–20 mA out
Supply Power	**Internal Supply Power:** C450YNN-1C Power Supply Module **External Supply Power:** 24 VAC (20–30 VAC) Safety Extra-Low Voltage (SELV) (Europe), Class 2 (North America), 50/60 Hz, 10 VA minimum **Note:** A System 450 control module or module assembly can use an internal or an external supply power source, but must not be connected to both simultaneously.
Ambient Operating Conditions	**Temperature:** -40 to 66°C (-40 to 150°F) when using 0–10 VDC outputs; -40 to 40°C (-40 to 104°F) when using 4–20 mA outputs **Humidity:** Up to 95% RH noncondensing; maximum dew point 29°C (85°F)
Ambient Shipping and Storage Conditions	**Temperature:** -40 to 80°C (-40 to 176°F) **Humidity:** Up to 95% RH noncondensing; maximum dew point 29°C (85°F)
Input Signal	0–5 VDC for humidity sensors and static pressure transducers 0.5–4.5 VDC for ratiometric pressure transducers 1,035 ohms at 25°C (77°F) for A99 PTC temperature sensors 1,000 ohms at 21.1°C (70°F) for TE-6xxx Nickel temperature sensors
Analog Output	**Voltage Mode (0–10 VDC):** 10 VDC maximum output voltage 10 mA maximum output current Requires an external load of 1,000 ohms or more The AO operates in Voltage Mode when connected to devices with impedance greater than 1,000 ohms. Devices that fall below 1,000 ohms may not operate as intended with Voltage Mode applications.
	Current Mode (4–20 mA): Requires an external load between 0–300 ohms The AO operates in Current Mode when connected to devices with impedance less than 300 ohms. Devices that rise above 300 ohms may not operate as intended with Current Mode applications.
Analog Input Accuracy	**Resolution:** 14 bits
Control Construction	Independently mounted control, surface mounted with Lexan® 950 enclosure suitable for DIN rail mounting or direct mounting to a hard, even surface.
Dimensions (H x W x D)	127 x 61 x 61 mm (5 x 2-3/8 x 2-3/8 in.)
Weight	C450CPW-100C: 195 g (0.43 lb)
Compliance CE	**North America:** cULus Listed; UL 60730, File E27734; FCC Compliant to CFR47, Part 15, Subpart B, Class B Industry Canada (IC) Compliant to Canadian ICES-003, Class B limits
	Europe: CE Mark – Johnson Controls, Inc. declares that this product is in compliance with the essential requirements and other relevant provisions of the EMC Directive and the Low Voltage Directive.
	Australia: Mark: C-Tick Compliant (N1813)

The performance specifications are nominal and conform to acceptable industry standards. For applications at conditions beyond these specifications, consult the local Johnson Controls office. Johnson Controls, Inc. shall not be liable for damages resulting from misapplication or misuse of its products. © 2015 Johnson Controls, Inc.

System 450™ Series Modular Controls (Continued)

C450CBN-3C and C450CCN-3C Control Modules with Relay Output

Product	C450CBN-3C and C450CCN-3C: System 450 Control Module models are sensing controls and operating controls with LCD, four-button touchpad, and SPDT relay output C450CBN-3C: Control Module with one SPDT output relay C450CCN-3C: Control Module with two SPDT output relays
Power Consumption	C450CBN-3C: 0.9 VA maximum C450CCN-3C: 1.3 VA maximum
Supply Power	**Internal Supply Power:** C450YNN-1C Power Supply Module **External Supply Power:** 24 VAC (20–30 VAC) Safety Extra-Low Voltage (SELV) (Europe), Class 2 (North America), 50/60 Hz, 10 VA minimum **Note:** A System 450 control module or module assembly can use an internal or an external supply power source, but must not be connected to both simultaneously.
Ambient Operating Conditions	**Temperature:** -40 to 66°C (-40 to 150°F) **Humidity:** Up to 95% RH noncondensing; maximum dew point 29°C (85°F)
Ambient Shipping and Storage Conditions	**Temperature:** -40 to 80°C (-40 to 176°F) **Humidity:** Up to 95% RH noncondensing; maximum dew point 29°C (85°F)
Input Signal	0–5 VDC for humidity sensors and static pressure transducers 0.5–4.5 VDC for ratiometric pressure transducers 1,035 ohms at 25°C (77°F) for A99 PTC temperature sensors 1,000 ohms at 21.1°C (70°F) for TE-6xxx Nickel temperature sensors
Output Relay Contacts	**General:** 1/2 HP at 120/240 VAC, SPDT
	Specific: AC Motor Ratings — 120 VAC — 208/240 VAC AC Full-load Amperes: 9.8 A 4.9 A Locked-Rotor Amperes: 58.8 A 29.4 A 10 Amperes AC Non-inductive at 24/240 VAC Pilot Duty: 125 VA at 24/240 VAC
Analog Input Accuracy	**Resolution:** 14 bits
Control Construction	Independently mounted control, surface mounted with Lexan® 950 enclosure suitable for DIN rail mounting or direct mounting to a hard, even surface.
Dimensions (H x W x D)	127 x 61 x 61 mm (5 x 2-3/8 x 2-3/8 in.)
Weight	C450CBN-3C: 209 g (0.46 lb) C450CCN-3C: 222 g (0.49 lb)
Compliance CE	**North America:** cULus Listed; UL 60730, File E27734; FCC Compliant to CFR47, Part 15, Subpart B, Class B; Industry Canada (IC) Compliant to Canadian ICES-003, Class B limits
	Europe: CE Mark – Johnson Controls, Inc. declares that this product is in compliance with the essential requirements and other relevant provisions of the EMC Directive and the Low Voltage Directive.
	Australia: Mark: C-Tick Compliant (N1813)

C450RBN-3C and C450RCN-3C Reset Control Modules with Real-Time Clock and Relay Output (Part 1 of 2)

Product	C450RBN-3C and C450RCN-3C: System 450 Reset Control Module models are sensing controls and operating controls with LCD, four-button touchpad, and SPDT relay output C450RBN-3C: Control Module with one SPDT output relay C450RCN-3C: Control Module with two SPDT output relays
Power Consumption	C450RBN-3C: 0.9 VA maximum C450RCN-3C: 1.3 VA maximum
Supply Power	**Internal Supply Power:** C450YNN-1C Power Supply Module **External Supply Power:** 24 VAC (20–30 VAC) Safety Extra-Low Voltage (SELV) (Europe), Class 2 (North America), 50/60 Hz, 10 VA minimum **Note:** A System 450 control module or module assembly can use an internal or an external supply power source, but must not be connected to both simultaneously.
Ambient Operating Conditions	**Temperature:** -40 to 66°C (-40 to 150°F) **Humidity:** Up to 95% RH noncondensing; maximum dew point 29°C (85°F)
Ambient Shipping and Storage Conditions	**Temperature:** -40 to 80°C (-40 to 176°F) **Humidity:** Up to 95% RH noncondensing; maximum dew point 29°C (85°F)
Input Signal	0–5 VDC for humidity sensors 1,035 ohms at 25°C (77°F) for A99 PTC temperature sensors

The performance specifications are nominal and conform to acceptable industry standards. For applications at conditions beyond these specifications, consult the local Johnson Controls office. Johnson Controls, Inc. shall not be liable for damages resulting from misapplication or misuse of its products. © 2015 Johnson Controls, Inc.

System 450™ Series Modular Controls (Continued)

C450RBN-3C and C450RCN-3C Reset Control Modules with Real-Time Clock and Relay Output (Part 2 of 2)

Output Relay Contacts	**General:** 1/2 HP at 120/240 VAC, SPDT
	Specific: AC Motor Ratings 120 VAC 208/240 VAC AC Full-load Amperes: 9.8 A 4.9 A AC Locked-Rotor Amperes: 58.8 A 29.4 A 10 Amperes AC Non-inductive at 24/240 VAC Pilot Duty: 125 VA at 24/240 VAC
Clock Accuracy	±4 minutes per year
Clock Backup Power	12 hours (capacitor reserve)
Setback Events	One occupied and one unoccupied event per day; 7 day schedule
Analog Input Accuracy	**Resolution:** 14 bits
Control Construction	Independently mounted control, surface mounted with Lexan® 950 enclosure suitable for DIN rail mounting or direct mounting to a hard, even surface.
Dimensions (H x W x D)	127 x 61 x 61 mm (5 x 2-3/8 x 2-3/8 in.)
Weight	C450RBN-3C: 209 g (0.46 lb) C450RCN-3C: 222 g (0.49 lb)
Compliance CE	**North America:** cULus Listed; UL 60730, File E27734; FCC Compliant to CFR47, Part 15, Subpart B, Class B; Industry Canada (IC) Compliant to Canadian ICES-003, Class B limits
	Europe: CE Mark – Johnson Controls, Inc. declares that this product is in compliance with the essential requirements and other relevant provisions of the EMC Directive and the Low Voltage Directive.
	Australia: Mark: C-Tick Compliant (N1813)

C450SPN-1C and C450SQN-1C Expansion Modules with Analog Output

Product	C450SPN-1C: System 450 Expansion Module with one Analog output C450SQN-1C: System 450 Expansion Module with two Analog outputs
Power Consumption	C450SPN-1C: 1.1 VA max using 0–10 V out; 1.3 VA maximum using 4–20 mA out C450SQN-1C: 1.8 VA max using 0–10 V out; 2.2 VA maximum using 4–20 mA out
Supply Power	**Internal Supply Power:** C450YNN-1C Power Supply Module **External Supply Power:** 24 VAC (20–30 VAC) Safety Extra-Low Voltage (SELV) (Europe), Class 2 (North America), 50/60 Hz, 10 VA minimum **Note:** A System 450 control module or module assembly can use an internal or an external supply power source, but must not be connected to both simultaneously.
Ambient Operating Conditions	**Temperature:** -40 to 66°C (-40 to 150°F) when using 0 to 10 VDC outputs; -40 to 40°C (-40 to 104°F) when using 4 to 20 mA outputs **Humidity:** Up to 95% RH noncondensing; maximum dew point 29°C (85°F)
Ambient Shipping and Storage Conditions	**Temperature:** -40 to 80°C (-40 to 176°F) **Humidity:** Up to 95% RH noncondensing; maximum dew point 29°C (85°F)
Analog Output	**Voltage Mode (0 to 10 VDC):** 10 VDC maximum output voltage 10 mA maximum output current Requires an external load of 1,000 ohms or more The AO operates in Voltage Mode when connected to devices with impedance greater than 1,000 ohms. Devices that drop below 1,000 ohms may not operate as intended with Voltage Mode applications.
	Current Mode (4 to 20 mA): Requires an external load between 0 to 300 ohms The AO operates in Current Mode when connected to devices with impedances less than 300 ohms. Devices that exceed 300 ohms may not operate as intended with Current Mode applications.
Control Construction	Independently mounted control, surface mounted with Lexan® 950 enclosure suitable for DIN rail mounting or direct mounting to a hard, even surface.
Dimensions (H x W x D)	127 x 61 x 61 mm (5 x 2-3/8 x 2-3/8 in.)
Weight	C450SPN-1C: 150 g (0.33 lb) C450SQN-1C: 150 g (0.33 lb)
Compliance CE	**North America:** cULus Listed; UL 60730, File E27734, Vol. 1; FCC Compliant to CFR47, Part 15, Subpart B, Class B Industry Canada (IC) Compliant to Canadian ICES-003, Class B limits
	Europe: CE Mark - Johnson Controls, Inc., declares that this product is in compliance with the essential requirements and other relevant provisions of the Low Voltage Directive and the EMC Directive.
	Australia: Mark: C-Tick Compliant (N1813)

The performance specifications are nominal and conform to acceptable industry standards. For applications at conditions beyond these specifications, consult the local Johnson Controls office. Johnson Controls, Inc. shall not be liable for damages resulting from misapplication or misuse of its products. © 2015 Johnson Controls, Inc.

System 450™ Series Modular Controls (Continued)

C450SBN-3C and C450SCN-3C Expansion Modules with Relay Output

Product	C450SBN-3C: System 450 Expansion Module with one SPDT output relay C450SCN-3C: System 450 Expansion Module with two SPDT output relays
Power Consumption	C450SBN-3C: 0.8 VA maximum C450SCN-3C: 1.2 VA maximum
Supply Power	**Internal Supply Power:** C450YNN-1C Power Supply Module **External Supply Power:** 24 VAC (20–30 VAC) Safety Extra-Low Voltage (SELV) (Europe), Class 2 (North America), 50/60 Hz, 10 VA minimum **Note:** A System 450 control module or module assembly can use an internal or an external supply power source, but must not be connected to both simultaneously.
Ambient Operating Conditions	**Temperature:** -40 to 66°C (-40 to 150°F) **Humidity:** Up to 95% RH noncondensing; maximum dew point 29°C (85°F)
Ambient Shipping and Storage Conditions	**Temperature:** -40 to 80°C (-40 to 176°F) **Humidity:** Up to 95% RH noncondensing; maximum dew point 29°C (85°F)
Output Relay Contacts	**General:** 1/2 HP at 120/240 VAC, SPDT
	Specific: AC Motor Ratings — 120 VAC — 208/240 VAC AC Full-Load Amperes: 9.8 A 4.9 A AC Locked-Rotor Amperes: 58.8 A 29.4 A 10 Amperes AC Noninductive at 24/240 VAC Pilot Duty: 125 VA at 24/240 VAC
Control Construction	Independently mounted control, surface mounted with Lexan® 950 enclosure suitable for DIN rail mounting or direct mounting to a hard, even surface.
Dimensions (H x W x D)	127 x 61 x 61 mm (5 x 2-3/8 x 2-3/8 in.)
Weight	C450SBN-3C: 172 g (0.38 lb) C450SCN-3C: 186 g (0.41 lb)
Compliance CE	**North America:** cULus Listed; UL 60730, File E27734; FCC Compliant to CFR47, Part 15, Subpart B, Class B Industry Canada (IC) Compliant to Canadian ICES-003, Class B limits
	Europe: CE Mark – Johnson Controls, Inc. declares that this product is in compliance with the essential requirements and other relevant provisions of the EMC Directive and the Low Voltage Directive.
	Australia: Mark: C-Tick Compliant (N1813)

C450YNN-1C Power Supply Module

Product	C450YNN-1C: System 450 Power Supply Module; 120 or 240 VAC stepdown to 24 VAC Class 2 (North America) or SELV (Europe)
Supply Power	110/120 VAC or 220/240 VAC at 50/60 Hz (100 mA maximum)
Secondary Power	24 VAC, 10 VA
Ambient Operating Conditions	**Temperature:** -40 to 66°C (-40 to 150°F) **Humidity:** Up to 95% RH noncondensing; maximum dew point 29°C (85°F)
Ambient Shipping and Storage Conditions	**Temperature:** -40 to 80°C (-40 to 176°F) **Humidity:** Up to 95% RH noncondensing; maximum dew point 29°C (85°F)
Control Construction	Independently mounted control, surface mounted with Lexan® 950 enclosure suitable for DIN rail mounting or direct mounting to a hard, even surface.
Dimensions (H x W x D)	127 x 61 x 61 mm (5 x 2-3/8 x 2-3/8 in.)
Weight	C450YNN-1C: 390 gm (0.86 lb)
Compliance CE	**North America:** cULus Listed; UL 60730, File E27734: FCC Compliant to CFR47, Part 15, Subpart B, Class B Industry Canada (IC) Compliant to Canadian ICES-003, Class B limits
	Europe: CE Mark – Johnson Controls, Inc. declares that this product is in compliance with the essential requirements and other relevant provisions of the EMC Directive and the Low Voltage Directive.
	Australia: Mark: C-Tick Compliant (N1813)

The performance specifications are nominal and conform to acceptable industry standards. For applications at conditions beyond these specifications, consult the local Johnson Controls office. Johnson Controls, Inc. shall not be liable for damages resulting from misapplication or misuse of its products. © 2015 Johnson Controls, Inc.

System 450™ Series Control Module with Network Communications

Description

System 450™ is a family of modular, digital electronic controls that is easily assembled and set up to provide reliable temperature, pressure, and humidity control for a wide variety of HVACR applications, commercial process applications, and industrial process applications.

The System 450 control system is designed to replace System 350™ and System 27 control systems and to provide many additional features and benefits with fewer than twenty model variations.

System 450 control modules provide a field-configurable out-of-the-box solution. Most System 450 control modules can control temperature, pressure, and humidity systems simultaneously.

A single C450 control module can be set up as a stand-alone control or connected to expansion modules to control up to ten On/Off relay and proportional analog outputs, based on any of the three available inputs.

System 450 Control Modules with Communications enable you to connect System 450 control systems to Modbus® or Ethernet networks for remote monitoring and setup. The Modbus communications control module is an RS485, RTU-compliant subordinate device. The Ethernet communications control module has an integral web server that can deliver web pages through a direct connection, on your LAN, or across the Internet.

Refer to the following documents for detailed information on designing, installing, setting up, and troubleshooting System 450 Series control systems with network communications:

- *System 450™ Series Modular Controls Product Bulletin (LIT-12011458)*
- *System 450™ Series Modular Control Systems with Communications Control Modules Technical Bulletin (LIT-12011826)*
- *System 450™ Series Control Module with RS485 Modbus® Communications Installation Instructions (Part No. 24-7664-2926)*
- *System 450™ Series Control Module with Ethernet Communications Installation Instructions (Part No. 24-7664-2934)*

Features

- Durable, compact, interchangeable modular components with plug-together connectors and DIN rail or direct wall mount capability eliminate field wiring between modules and allow you to quickly and easily design, assemble, install, and upgrade your control systems.
- Versatile, multipurpose, field-configurable control modules and expansion modules designed for global use allow you to create a wide variety of application-specific control systems capable of controlling temperature, pressure, or humidity, or all three conditions simultaneously, with only a small suite of module models.
- Up to three hard-wired input sensors and up to ten relay or analog outputs (in any combination) per control system allow you to build complex custom control systems while reducing your control system cost to only the cost of the required components.
- Control modules with bright backlit LCDs and four-button touch pad user interfaces provide quick, clear, visual status of your System 450 control system inputs and outputs with the touch of a button and enable you to quickly and easily set up and adjust your control system.
- An extensive suite of compatible temperature and humidity sensors, and pressure transducers allows you to monitor and control a wide range of HVACR and process conditions in a variety of standard and global units of measurement.
- High input signal selection enables your control system to monitor a temperature, pressure, or humidity condition with two or three sensors (of the same type) and control your system outputs based on the highest condition value sensed by the referenced sensors.



C450CEN Control Module with Communication

- Differential control enables your control system to monitor and maintain a temperature, pressure, or humidity differential between two sensor points within a system, process, or space.
- Ethernet communication capability through a built-in web server (Ethernet control modules only) allows you to monitor your control system status and set up or change the parameters by means of a direct Ethernet cable connection, through a LAN connection, or over the Internet. The built in web server delivers user-friendly web pages to client browsers on a desktop, laptop, tablet, or smart device.
- The web page server on Ethernet communication modules provides a simple, intuitive web interface for easy remote monitoring, setup, adjustment and remote monitoring of your control systems across Ethernet networks.
- RS485, RTU-compliant Modbus® network communication capability (Modbus control modules only) enables a head-end RS485 Modbus master controller to read and write control system status and setup parameters to the System 450 Modbus communication control module.
- Password protection for local access (Ethernet and Modbus control modules only) and password protection for remote access (Ethernet control module only) deters unauthorized changes to the control system settings, but allows local and remote monitoring of your control system status.
- Analog output signal limiting features (communication control modules only) allow you to select the rate and condition range at which the control updates the analog output signal, potentially reducing wear on the controlled equipment.
- Binary input with time delay (communication control modules only) allows you to use an external set of dry contacts and selectable time delays to control relay outputs.

The performance specifications are nominal and conform to acceptable industry standards. For applications at conditions beyond these specifications, consult the local Johnson Controls office. Johnson Controls, Inc. shall not be liable for damages resulting from misapplication or misuse of its products. © 2015 Johnson Controls, Inc.

System 450™ Series Control Module with Network Communications (Continued)

Selection Chart

Refer to the *System 450 Compatible Sensors, Transducers, and Accessories Catalog Page (LIT-1900662)* for temperature sensors, humidity sensors, and pressure transducers compatible with the System 450 Control Modules.

Communications System 450 Modules and Accessories Ordering Information

Product Code Number	Product Description
C450CEN-1C	Control Module with Ethernet Communications, LCD, and Four-Button Touchpad UI. (No onboard outputs available on control modules with network communications capabilities.)
C450CRN-1C	Control Module with RS485 Modbus Communications, LCD, and Four-Button Touchpad UI. (No onboard outputs available on control modules with network communications capabilities.)
BKT287-1R	DIN Rail; 0.30 m (12 in.) long
BKT287-2R	DIN Rail; 1 m (39-1/3 in.) long
BKT287-3R	DIN Rail; 0.61 m (24 in.) long
BKT287-4R	DIN Rail; 0.36 m (14 in.) long
PLT344-1R	DIN Rail End Clamps (2 clamps)
WHA-C450-100C	System 450 module connection extension cable, 100 cm (3.3 ft) long

Repair Information

If the System 450™ Control Module with Ethernet or RS485 Modbus Communication fails to operate within its specifications, replace the unit. For a replacement System 450™ Control Module, contact a Johnson Controls® representative.

Technical Specifications

C450CEN-1C Control Module with Ethernet Communications

Product	C450CEN: System 450 control modules are sensing controls and operating controls with LCD and four-button touchpad UI, Ethernet communications capability, and no outputs. C450CEN-1C: Control module with Ethernet communications capability
Supply Power	**Internal Supply Power:** C450YNN-1C Power Supply Module **External Supply Power:** 24 VAC (20–30 VAC) Safety Extra-Low Voltage (SELV) (Europe), Class 2 (North America), 50/60 Hz, 10 VA minimum **Note:** A System 450 control module or module assembly can use an internal or an external supply power source, but must not be connected to both simultaneously.
Ambient Operating Conditions	**Temperature:** -40 to 66°C (-40 to 150°F) **Humidity:** Up to 95% RH noncondensing; maximum dew point 29°C (85°F)
Ambient Shipping and Storage Conditions	**Temperature:** -40 to 80°C (-40 to 176°F) **Humidity:** Up to 95% RH noncondensing; maximum dew point 29°C (85°F)
Input Signal	0–5 VDC; 1,035 ohms at 25°C (77°F) for an A99 PTC Temperature Sensor
Analog Input Accuracy	**Resolution:** 16 bits
Control Construction	Independently mounted control, surface mounted with Lexan® 950 enclosure suitable for DIN rail mounting or direct mounting to a hard, even surface.
Dimensions (H x W x D)	127 x 63 x 63 mm (5 x 2-3/8 x 2-3/8 in.)
Weight	C450CEN-1C: 207 g (0.46 lb)
Compliance CE	**North America:** cULus Listed; UL 60730, File E27734; FCC Compliant to CFR47, Part 15, Subpart B, Class B Industry Canada (IC) Compliant to Canadian ICES-003, Class B limits
	Europe: CE Mark – Johnson Controls, Inc. declares that this product is in compliance with the essential requirements and other relevant provisions of the EMC Directive; Low Voltage Directive; CISPR22, class B.
	Australia: Mark: C-Tick Compliant (N1813)

The performance specifications are nominal and conform to acceptable industry standards. For applications at conditions beyond these specifications, consult the local Johnson Controls office. Johnson Controls, Inc. shall not be liable for damages resulting from misapplication or misuse of its products. © 2015 Johnson Controls, Inc.

System 450™ Series Control Module with Network Communications (Continued)

C450CRN-1C Control Module with RS485 Modbus Communications

Product	C450CRN-1C: System 450 control modules are sensing controls and operating controls with LCD and four-button touchpad UI and no outputs. This control module is an RS485, RTU compliant Modbus subordinate device.
Supply Power	**Internal Supply Power:** C450YNN-1C Power Supply Module **External Supply Power:** 24 VAC (20–30 VAC) Safety Extra-Low Voltage (SELV) (Europe), Class 2 (North America), 50/60 Hz, 10 VA minimum **Note:** A System 450 control module or module assembly can use an internal or an external supply power source, but must not be connected to both simultaneously.
Ambient Operating Conditions	**Temperature:** -40 to 66°C (-40 to 150°F) **Humidity:** Up to 95% RH noncondensing; maximum dew point 29°C (85°F)
Ambient Shipping and Storage Conditions	**Temperature:** -40 to 80°C (-40 to 176°F) **Humidity:** Up to 95% RH noncondensing; maximum dew point 29°C (85°F)
Input Signal	0–5 VDC; 1,035 ohm at 25°C (77°F) for an A99 PTC Temperature Sensor
Analog Input Accuracy	**Resolution:** 16 bit
Control Construction	Independently mounted control, surface mounted with Lexan® 950 enclosure suitable for DIN rail mounting or direct mounting to a hard, even surface.
Dimensions (H x W x D)	127 x 63 x 63 mm (5 x 2-3/8 x 2-3/8 in.)
Weight	C450CRN-1C: 207 g (0.46 lb)
Compliance CE	**North America:** cULus Listed; UL 60730, File E27734: FCC Compliant to CFR47, Part 15, Subpart B, Class B Industry Canada (IC) Compliant to Canadian ICES-003, Class B limits
	Europe: CE Mark – Johnson Controls, Inc. declares that this product is in compliance with the essential requirements and other relevant provisions of the EMC Directive; Low Voltage Directive; CISPR22, class B
	Australia: Mark: C-Tick Compliant (N1813)

The performance specifications are nominal and conform to acceptable industry standards. For applications at conditions beyond these specifications, consult the local Johnson Controls office. Johnson Controls, Inc. shall not be liable for damages resulting from misapplication or misuse of its products. © 2015 Johnson Controls, Inc.

System 450™ Reset Control Modules with Real-Time Clock and Relay Output

Description

System 450™ is a family of modular, digital electronic controls that is easily assembled and set up to provide reliable temperature, pressure, and humidity control for a wide variety of HVACR applications, commercial process applications, and industrial process applications.

System 450 Reset Control Modules provide many of the features of the standard models for temperature and humidity control. In addition, these modules provide setpoint reset, real-time setback scheduling, and run-time balancing (equal run time) capability.

The System 450 control system is designed to replace System 350™ and System 27 control systems, and to provide many additional features and benefits with fewer than twenty model variations.

System 450 control modules provide a field-configurable out-of-the-box solution. Most System 450 control modules can control temperature, pressure, and humidity systems simultaneously.

A single C450 control module can be set up as a stand-alone control or connected to expansion modules to control up to ten On/Off relay and proportional analog outputs, based on any of the three available inputs.

Refer to the following documents for important product application information:

- *System 450™ Series Modular Controls Product Bulletin (LIT-12011458)*
- *System 450™ Series Modular Control Systems with Reset Control Modules Technical Bulletin (LIT-12011842)*
- *System 450™ Series Reset Control Modules with Real-Time Clock and Relay Output Installation Instructions (Part No. 24-7664-2888)*

Features

- Durable, compact, interchangeable modular components with plug-together connectors and DIN rail or direct wall mount capability eliminate field wiring between modules and allow you to quickly and easily design, assemble, install, and upgrade your control systems.
- Versatile, multipurpose, field-configurable control modules and expansion modules designed for global use allow you to create a wide variety of application-specific control systems capable of controlling temperature, pressure, or humidity, or all three conditions simultaneously, with only a small suite of module models.
- Up to three hard-wired input sensors and up to ten relay or analog outputs (in any combination) per control system allow you to build complex custom control systems while reducing your control system cost to only the cost of the required components.
- Control Modules with bright backlit LCDs and four-button touch pad user interfaces provide quick, clear, visual status of your System 450 control system inputs and outputs with the touch of a button and enable you to quickly and easily set up and adjust your control system.
- Multipurpose, all-in-one control modules enable simple stand-alone, single-module control systems that are temperature, pressure, and humidity capable out of the box and easy to set up in the field to replace a wide variety of OEM HVACR and process controls.
- An extensive suite of compatible temperature and humidity sensors, and pressure transducers allows you to monitor and control a wide range of HVACR and process conditions in a variety of standard and global units of measurement.
- High input signal selection enables your control system to monitor a temperature, pressure, or humidity condition with two or three sensors (of the same type) and control your system outputs based on the highest condition value sensed by the referenced sensors.



C450RCN-3 Reset Control Module with Real-Time Clock and Relay Output

- Differential control enables your control system to monitor and maintain a temperature, pressure, or humidity differential between two sensor points within a system, process, or space.

Reset Control Features

- Adjustable minimum and maximum setpoint temperatures (reset control modules only) enable compliance with the manufacturer's specifications for your controlled HVACR and process equipment.
- Selectable shutdown-high and shutdown-low temperature settings (reset control modules only) saves you energy by shutting down controlled equipment when the ambient temperature either rises or drops to a point where heating or cooling is no longer required.
- Real time clock and adjustable setback temperature (reset control modules only) save you energy by setting back heating, cooling, or humidity setpoints during scheduled unoccupied periods (24-hour day, 7-day week schedule).
- User-defined reset control capability (reset control modules only) saves you energy in a wide variety of temperature and humidity reset control applications by adjusting the temperature or humidity control loop, based on changes in ambient outdoor temperature or other uncontrolled condition.

Repair Information

If the System 450 Reset Control Module fails to operate within its specifications, replace the unit. For a replacement System 450 Reset Control Module, contact the nearest Johnson Controls® representative.

The performance specifications are nominal and conform to acceptable industry standards. For applications at conditions beyond these specifications, consult the local Johnson Controls office. Johnson Controls, Inc. shall not be liable for damages resulting from misapplication or misuse of its products. © 2015 Johnson Controls, Inc.

System 450™ Reset Control Modules with Real-Time Clock and Relay Output (Continued)

Selection Chart

Refer to the *System 450 Compatible Sensors, Transducers, and Accessories Catalog Page (LIT-1900662)* for temperature sensors and humidity sensors compatible with the System 450 Reset Control Modules. Reset Control Modules control temperature and humidity, but not pressure.

Reset System 450 Modules and Accessories Ordering Information

Product Code Number	Product Description
C450RBN-3C	Reset Control Module with LCD, Four-Button Touchpad UI, and SPDT relay output; provides one SPDT output relay. One A99BC-25C temperature sensor with 0.25 m (9-1/4 in.) silicon leads and one A99BC-300C temperature sensor with 3 m (9 ft 10 in.) silicon leads are included in the box with the Reset Control Module.
C450RCN-3C	Reset Control Module with LCD, Four-Button Touchpad UI, and SPDT relay output; provides two SPDT output relays. One A99BC-25C temperature sensor with 0.25 m (9-1/4 in.) silicon leads and one A99BC-300C temperature sensor with 3 m (9 ft 10 in.) silicon leads are included in the box with the Reset Control Module.
BKT287-1R	DIN Rail; 0.30 m (12 in.) long
BKT287-2R	DIN Rail; 1 m (39-1/3 in.) long
BKT287-3R	DIN Rail; 0.61 m (24 in.) long
BKT287-4R	DIN Rail; 0.36 m (14 in.) long
PLT344-1R	DIN Rail End Clamps (2 clamps)
WHA-C450-100C	System 450 module connection extension cable, 100 cm (3.3 ft) long

Technical Specifications

C450RBN-3C and C450RCN-3C Reset Control Modules with Real-Time Clock and Relay Output

Product	C450RBN-3C and C450RCN-3C: System 450 Reset Control Module models are sensing controls and operating controls with LCD, four-button touchpad, and SPDT relay output C450RBN-3C: Control Module with one SPDT output relay C450RCN-3C: Control Module with two SPDT output relays
Power Consumption	C450RBN-3C: 0.9 VA maximum C450RCN-3C: 1.3 VA maximum
Supply Power	**Internal Supply Power:** C450YNN-1C Power Supply Module **External Supply Power:** 24 VAC (20–30 VAC) Safety Extra-Low Voltage (SELV) (Europe), Class 2 (North America), 50/60 Hz, 10 VA minimum **Note:** A System 450 control module or module assembly can use an internal or an external supply power source, but must not be connected to both simultaneously.
Ambient Operating Conditions	**Temperature:** -40 to 66°C (-40 to 150°F) **Humidity:** Up to 95% RH noncondensing; maximum dew point 29°C (85°F)
Ambient Shipping and Storage Conditions	**Temperature:** -40 to 80°C (-40 to 176°F) **Humidity:** Up to 95% RH noncondensing; maximum dew point 29°C (85°F)
Input Signal	0–5 VDC for humidity sensors 1,035 ohms at 25°C (77°F) for A99 PTC temperature sensors
Output Relay Contacts	**General:** 1/2 HP at 120/240 VAC, SPDT
	Specific: AC Motor Ratings — 120 VAC — 208/240 VAC AC Full-load Amperes: 9.8 A 4.9 A AC Locked-Rotor Amperes: 58.8 A 29.4 A 10 Amperes AC Non-inductive at 24/240 VAC Pilot Duty: 125 VA at 24/240 VAC
Clock Accuracy	±4 minutes per year
Clock Backup Power	12 hours (capacitor reserve)
Setback Events	One occupied and one unoccupied event per day; 7 day schedule
Analog Input Accuracy	**Resolution:** 14 bits
Control Construction	Independently mounted control, surface mounted with Lexan® 950 enclosure suitable for DIN rail mounting or direct mounting to a hard, even surface.
Dimensions (H x W x D)	127 x 61 x 61 mm (5 x 2-3/8 x 2-3/8 in.)
Weight	C450RBN-3C: 209 g (0.46 lb) C450RCN-3C: 222 g (0.49 lb)
Compliance CE	**North America:** cULus Listed; UL 60730, File E27734; FCC Compliant to CFR47, Part 15, Subpart B, Class B; Industry Canada (IC) Compliant to Canadian ICES-003, Class B limits
	Europe: CE Mark – Johnson Controls, Inc. declares that this product is in compliance with the essential requirements and other relevant provisions of the EMC Directive and the Low Voltage Directive.
	Australia: Mark: C-Tick Compliant (N1813)

The performance specifications are nominal and conform to acceptable industry standards. For applications at conditions beyond these specifications, consult the local Johnson Controls office. Johnson Controls, Inc. shall not be liable for damages resulting from misapplication or misuse of its products. © 2015 Johnson Controls, Inc.

System 450™ Control Modules with Analog Output

Description

System 450™ is a family of modular, digital electronic controls that is easily assembled and set up to provide reliable temperature, pressure, and humidity control for a wide variety of HVACR applications, commercial process applications, and industrial process applications.

The System 450 control system is designed to replace System 350™ and System 27 control systems, and to provide many additional features and benefits with fewer than twenty model variations.

System 450 control modules provide a field-configurable out-of-the-box solution. Most System 450 control modules can control temperature, pressure, and humidity systems simultaneously.

A single C450 control module can be set up as a stand-alone control or connected to expansion modules to control up to ten On/Off relay and proportional analog outputs, based on any of the three available inputs.

Refer to the following documents for important product application information:

- *System 450™ Series Modular Controls Product Bulletin (LIT-12011458)*
- *System 450™ Series Modular Control Systems with Standard Control Modules Technical Bulletin (LIT-12011459)*
- *System 450™ Series Control Modules with Analog Outputs Installation Instructions (Part No. 24-7664-2853)*

Features

- Durable, compact, interchangeable modular components with plug-together connectors and DIN rail or direct wall mount capability eliminate field wiring between modules and allow you to quickly and easily design, assemble, install, and upgrade your control systems.
- Versatile, multipurpose, field-configurable control modules and expansion modules designed for global use allow you to create a wide variety of application-specific control systems capable of controlling temperature, pressure, or humidity, or all three conditions simultaneously, with only a small suite of module models.
- Up to three hard-wired input sensors and up to ten relay or analog outputs (in any combination) per control system allow you to build complex custom control systems while reducing your control system cost to only the cost of the required components.
- Control Modules with bright backlit LCDs and four-button touch pad user interfaces provide quick, clear, visual status of your System 450 control system inputs and outputs with the touch of a button and enable you to quickly and easily set up and adjust your control system.



C450CPN-3C Control Module with Analog Output

- Multipurpose, all-in-one control modules enable simple stand-alone, single-module control systems that are temperature, pressure, and humidity capable out of the box and easy to set up in the field to replace a wide variety of OEM HVACR and process controls.
- An extensive suite of compatible temperature and humidity sensors, and pressure transducers allows you to monitor and control a wide range of HVACR and process conditions in a variety of standard and global units of measurement.
- High input signal selection enables your control system to monitor a temperature, pressure, or humidity condition with two or three sensors (of the same type) and control your system outputs based on the highest condition value sensed by the referenced sensors.
- Differential control enables your control system to monitor and maintain a temperature, pressure, or humidity differential between two sensor points within a system, process, or space.

Repair Information

If the System 450™ Control Module with Analog Outputs fails to operate within its specifications, replace the unit. For a replacement System 450™ Control Module with Analog Outputs, contact your Johnson Controls® representative.

Selection Chart

Refer to the *System 450 Compatible Sensors, Transducers, and Accessories Catalog Page (LIT-1900662)* for temperature sensors, humidity sensors, and pressure transducers compatible with the System 450 Control Modules with Analog Outputs.

Standard System 450 Modules and Accessories Ordering Information

Product Code Number	Product Description
C450CPN-3C	Standard Control Module with LCD, Four-Button Touchpad UI, and Analog Output; provides one analog output (0–10 VDC or 4–20 mA self-selecting signal) for proportional control.
C450CQN-3C	Standard Control Module with LCD and Four-Button Touchpad UI, and Analog Output; provides two analog outputs (0–10 VDC or 4–20 mA self-selecting signals) for proportional control.
BKT287-1R	DIN Rail; 0.30 m (12 in.) long
BKT287-2R	DIN Rail; 1 m (39-1/3 in.) long
BKT287-3R	DIN Rail; 0.61 m (24 in.) long
BKT287-4R	DIN Rail; 0.36 m (14 in.) long
PLT344-1R	DIN Rail End Clamps (2 clamps)
WHA-C450-100C	System 450 module connection extension cable, 100 cm (3.3 ft) long

The performance specifications are nominal and conform to acceptable industry standards. For applications at conditions beyond these specifications, consult the local Johnson Controls office. Johnson Controls, Inc. shall not be liable for damages resulting from misapplication or misuse of its products. © 2015 Johnson Controls, Inc.

System 450™ Control Modules with Analog Output (Continued)

Technical Specifications

C450CPN-3C and C450CQN-3C Control Modules with Analog Output

Product	C450CPN-3C and C450CQN-3C: System 450 Control Module models are sensing controls and operating controls with LCD, four-button touchpad, and SPDT analog output C450CPN-3C: Control Module with one analog output C450CQN-3C: Control Module with two analog outputs
Power Consumption	C450CPN-3C: 1.3 VA maximum using 0–10 V out; 1.5 VA maximum using 4–20 mA out C450CQN-3C: 2.0 VA maximum using 0–10 V out; 2.4 VA maximum using 4–20 mA out
Supply Power	**Internal Supply Power:** C450YNN-1C Power Supply Module **External Supply Power:** 24 VAC (20–30 VAC) Safety Extra-Low Voltage (SELV) (Europe), Class 2 (North America), 50/60 Hz, 10 VA minimum **Note:** A System 450 control module or module assembly can use an internal or an external supply power source, but must not be connected to both simultaneously.
Ambient Operating Conditions	**Temperature:** -40 to 66°C (-40 to 150°F) when using 0–10 VDC outputs; -40 to 40°C (-40 to 104°F) when using 4–20 mA outputs **Humidity:** Up to 95% RH noncondensing; maximum dew point 29°C (85°F)
Ambient Shipping and Storage Conditions	**Temperature:** -40 to 80°C (-40 to 176°F) **Humidity:** Up to 95% RH noncondensing; maximum dew point 29°C (85°F)
Input Signal	0–5 VDC for humidity sensors and static pressure transducers 0.5–4.5 VDC for ratiometric pressure transducers 1,035 ohms at 25°C (77°F) for A99 PTC temperature sensors 1,000 ohms at 21.1°C (70°F) for TE-6xxx Nickel temperature sensors
Analog Output	**Voltage Mode (0–10 VDC):** 10 VDC maximum output voltage 10 mA maximum output current Requires an external load of 1,000 ohms or more The AO operates in Voltage Mode when connected to devices with impedance greater than 1,000 ohms. Devices that fall below 1,000 ohms may not operate as intended with Voltage Mode applications.
	Current Mode (4–20 mA): Requires an external load between 0–300 ohms The AO operates in Current Mode when connected to devices with impedance less than 300 ohms. Devices that rise above 300 ohms may not operate as intended with Current Mode applications.
Analog Input Accuracy	**Resolution:** 14 bits
Control Construction	Independently mounted control, surface mounted with Lexan® 950 enclosure suitable for DIN rail mounting or direct mounting to a hard, even surface.
Dimensions (H x W x D)	127 x 61 x 61 mm (5 x 2-3/8 x 2-3/8 in.)
Weight	C450CPN-3C: 195 g (0.43 lb) C450CQN-3C: 195 g (0.43 lb)
Compliance CE	**North America:** cULus Listed; UL 60730, File E27734; FCC Compliant to CFR47, Part 15, Subpart B, Class B Industry Canada (IC) Compliant to Canadian ICES-003, Class B limits
	Europe: CE Mark – Johnson Controls, Inc. declares that this product is in compliance with the essential requirements and other relevant provisions of the EMC Directive and the Low Voltage Directive.
	Australia: Mark: C-Tick Compliant (N1813)

The performance specifications are nominal and conform to acceptable industry standards. For applications at conditions beyond these specifications, consult the local Johnson Controls office. Johnson Controls, Inc. shall not be liable for damages resulting from misapplication or misuse of its products. © 2015 Johnson Controls, Inc.

System 450™ Control Modules with Relay Output

Description

System 450™ is a family of modular, digital electronic controls that is easily assembled and set up to provide reliable temperature, pressure, and humidity control for a wide variety of HVACR applications, commercial process applications, and industrial process applications.

The System 450 control system is designed to replace System 350™ and System 27 control systems, and to provide many additional features and benefits with fewer than twenty model variations.

System 450 control modules provide a field-configurable out-of-the-box solution. Most System 450 control modules can control temperature, pressure, and humidity systems simultaneously.

A single C450 control module can be set up as a stand-alone control or connected to expansion modules to control up to ten On/Off relay and proportional analog outputs, based on any of the three available inputs.

Refer to the following documents for important product information:

- *System 450™ Series Modular Controls Product Bulletin (LIT-12011458)*
- *System 450™ Series Modular Control Systems with Standard Control Modules Technical Bulletin (LIT-12011459)*
- *System 450™ Series Control Modules with Relay Outputs Installation Instructions (Part No. 24-7664-2896)*



C450CCN-3C Control Module with Relay Output

Features

- Durable, compact, interchangeable modular components with plug-together connectors and DIN rail or direct wall mount capability eliminate field wiring between modules and allow you to quickly and easily design, assemble, install, and upgrade your control systems.
- Versatile, multipurpose, field-configurable control modules and expansion modules designed for global use allow you to create a wide variety of application-specific control systems capable of controlling temperature, pressure, or humidity, or all three conditions simultaneously, with only a small suite of module models.
- Up to three hard-wired input sensors and up to ten relay or analog outputs (in any combination) per control system allow you to build complex custom control systems while reducing your control system cost to only the cost of the required components.
- Control Modules with bright backlit LCDs and four-button touch pad user interfaces provide quick, clear, visual status of your System 450 control system inputs and outputs with the touch of a button and enable you to quickly and easily set up and adjust your control system.
- Multipurpose, all-in-one control modules enable simple stand-alone, single-module control systems that are temperature, pressure, and humidity capable out of the box and are easy to set up in the field to replace a wide variety of OEM HVACR and process controls.
- An extensive suite of compatible temperature and humidity sensors and pressure transducers allows you to monitor and control a wide range of HVACR and process conditions in a variety of standard and global units of measurement.
- High input signal selection enables your control system to monitor a temperature, pressure, or humidity condition with two or three sensors (of the same type) and control your system outputs based on the highest condition value sensed by the referenced sensors.
- Differential control enables your control system to monitor and maintain a temperature, pressure, or humidity differential between two sensor points within a system, process, or space.

Repair Information

- If the System 450™ Control Module with Relay Outputs fails to operate within its specifications, replace the unit. For a replacement System 450™ Control Module with Relay Outputs, contact a Johnson Controls® representative.

Selection Chart

Refer to the *System 450 Compatible Sensors, Transducers, and Accessories Catalog Page (LIT-1900662)* for temperature sensors, humidity sensors, and pressure transducers compatible with the System 450 Control Modules with Relay Outputs.

Standard System 450 Modules and Accessories Ordering Information

Product Code Number	Product Description
C450CBN-3C	Standard Control Module with LCD, Four-Button Touchpad UI, and Relay Output; provides one relay output (SPDT line-voltage relay) for SPDT control.
C450CCN-3C	Standard Control Module with LCD, Four-Button Touchpad UI, and Relay Output; provides two relay outputs (SPDT line-voltage relays) for SPDT control.
BKT287-1R	DIN Rail; 0.30 m (12 in.) long
BKT287-2R	DIN Rail; 1 m (39-1/3 in.) long
BKT287-3R	DIN Rail; 0.61 m (24 in.) long
BKT287-4R	DIN Rail; 0.36 m (14 in.) long
PLT344-1R	DIN Rail End Clamps (2 clamps)
WHA-C450-100C	System 450 module connection extension cable, 100 cm (3.3 ft) long

The performance specifications are nominal and conform to acceptable industry standards. For applications at conditions beyond these specifications, consult the local Johnson Controls office. Johnson Controls, Inc. shall not be liable for damages resulting from misapplication or misuse of its products. © 2015 Johnson Controls, Inc.

System 450™ Control Modules with Relay Output (Continued)

Technical Specifications

C450CBN-3C and C450CCN-3C Control Modules with Relay Output

Product	C450CBN-3C and C450CCN-3C: System 450 Control Module models are sensing controls and operating controls with LCD, four-button touchpad, and SPDT relay output C450CBN-3C: Control Module with one SPDT output relay C450CCN-3C: Control Module with two SPDT output relays
Power Consumption	C450CBN-3C: 0.9 VA maximum C450CCN-3C: 1.3 VA maximum
Supply Power	**Internal Supply Power:** C450YNN-1C Power Supply Module **External Supply Power:** 24 VAC (20–30 VAC) Safety Extra-Low Voltage (SELV) (Europe), Class 2 (North America), 50/60 Hz, 10 VA minimum **Note:** A System 450 control module or module assembly can use an internal or an external supply power source, but must not be connected to both simultaneously.
Ambient Operating Conditions	**Temperature:** -40 to 66°C (-40 to 150°F) **Humidity:** Up to 95% RH noncondensing; maximum dew point 29°C (85°F)
Ambient Shipping and Storage Conditions	**Temperature:** -40 to 80°C (-40 to 176°F) **Humidity:** Up to 95% RH noncondensing; maximum dew point 29°C (85°F)
Input Signal	0–5 VDC for humidity sensors and static pressure transducers 0.5–4.5 VDC for ratiometric pressure transducers 1,035 ohms at 25°C (77°F) for A99 PTC temperature sensors 1,000 ohms at 21.1°C (70°F) for TE-6xxx Nickel temperature sensors
Output Relay Contacts	**General:** 1/2 HP at 120/240 VAC, SPDT
	Specific: AC Motor Ratings — 120 VAC — 208/240 VAC AC Full-load Amperes: 9.8 A 4.9 A Locked-Rotor Amperes: 58.8 A 29.4 A 10 Amperes AC Non-inductive at 24/240 VAC Pilot Duty: 125 VA at 24/240 VAC
Analog Input Accuracy	**Resolution:** 14 bits
Control Construction	Independently mounted control, surface mounted with Lexan® 950 enclosure suitable for DIN rail mounting or direct mounting to a hard, even surface.
Dimensions (H x W x D)	127 x 61 x 61 mm (5 x 2-3/8 x 2-3/8 in.)
Weight	C450CBN-3C: 209 g (0.46 lb) C450CCN-3C: 222 g (0.49 lb)
Compliance CE	**North America:** cULus Listed; UL 60730, File E27734; FCC Compliant to CFR47, Part 15, Subpart B, Class B; Industry Canada (IC) Compliant to Canadian ICES-003, Class B limits
	Europe: CE Mark – Johnson Controls, Inc. declares that this product is in compliance with the essential requirements and other relevant provisions of the EMC Directive and the Low Voltage Directive.
	Australia: Mark: C-Tick Compliant (N1813)

The performance specifications are nominal and conform to acceptable industry standards. For applications at conditions beyond these specifications, consult the local Johnson Controls office. Johnson Controls, Inc. shall not be liable for damages resulting from misapplication or misuse of its products. © 2015 Johnson Controls, Inc.

System 450™ Control Module with Hybrid Analog Output

Description

System 450™ is a family of modular, digital electronic controls that is easily assembled and set up to provide reliable temperature, pressure, and humidity control for a wide variety of HVACR applications, commercial process applications, and industrial process applications.

System 450 control modules provide a field-configurable out-of-the-box solution. Most System 450 control modules can control temperature, pressure, and humidity systems simultaneously.

A single C450 control module can be set up as a stand-alone control or connected to expansion modules to control up to ten On/Off relay and proportional analog outputs, based on any of the three available inputs.

The System 450 Control Module with Hybrid Analog Output has a single self-selecting analog output to optimize and extend the controlled speed range of variable speed electronically commutated (EC) motors.

Refer to the following documents for important product information:

- *System 450™ Series Modular Controls Product Bulletin (LIT-12011458)*
- *System 450™ Series Modular Control Systems with Standard Control Modules Technical Bulletin (LIT-12011459)*
- *System 450™ Series Control Module with Hybrid Analog Output and High Input Signal Selection Installation Instructions (Part No. 24-7664-2802)*

Features

- Durable, compact, interchangeable modular components with plug-together connectors and DIN rail or direct wall mount capability eliminate field wiring between modules and allow you to quickly and easily design, assemble, install, and upgrade your control systems.
- Versatile, multipurpose, field-configurable control modules and expansion modules designed for global use allow you to create a wide variety of application-specific control systems capable of controlling temperature, pressure, or humidity, or all three conditions simultaneously, with only a small suite of module models.
- Up to three hard-wired input sensors and up to ten relay or analog outputs (in any combination) per control system allow you to build complex custom control systems while reducing your control system cost to only the cost of the required components.
- Control Modules with bright backlit LCDs and four-button touch pad user interfaces provide quick, clear, visual status of your System 450 control system inputs and outputs with the touch of a button and enable you to quickly and easily set up and adjust your control system.
- Multipurpose, all-in-one control modules enable simple stand-alone, single-module control systems that are temperature, pressure, and humidity capable out of the box and easy to set up in the field to replace a wide variety of OEM HVACR and process controls.



C450CPW-100 Control Module with Hybrid Analog Output

- An extensive suite of compatible temperature and humidity sensors, and pressure transducers allows you to monitor and control a wide range of HVACR and process conditions in a variety of standard and global units of measurement.
- High input signal selection enables your control system to monitor a temperature, pressure, or humidity condition with two or three sensors (of the same type) and control your system outputs based on the highest condition value sensed by the referenced sensors.
- Differential control enables your control system to monitor and maintain a temperature, pressure, or humidity differential between two sensor points within a system, process, or space.

Repair Information

If the System 450™ Control Module with Hybrid Analog Output fails to operate within its specifications, replace the unit. For a replacement System 450™ Control Module with Hybrid Analog Output, contact a Johnson Controls® representative.

The performance specifications are nominal and conform to acceptable industry standards. For applications at conditions beyond these specifications, consult the local Johnson Controls office. Johnson Controls, Inc. shall not be liable for damages resulting from misapplication or misuse of its products. © 2015 Johnson Controls, Inc.

System 450™ Control Module with Hybrid Analog Output (Continued)

Selection Chart

Refer to the *System 450 Compatible Sensors, Transducers, and Accessories Catalog Page (LIT-1900662)* for temperature sensors, humidity sensors, and pressure transducers compatible with the System 450 Control Modules.

Hybrid System 450 Modules and Accessories Ordering Information

Product Code Number	Product Description
C450CPW-100C	Hybrid Analog Output Control Module with LCD, Four-Button Touchpad UI, Hybrid Analog Output and Optional High Input Signal Select; provides one hybrid analog output and optional high input signal select primarily used for variable-speed EC motor speed control. Only Analog Output 1 (OUTA1) can be configured as a hybrid analog output and/or use the High Input Signal Selection feature. These features are not available for any of the other outputs in a System 450 control system that uses the C450CPW-100C as the control module.
BKT287-1R	DIN Rail; 0.30 m (12 in.) long
BKT287-2R	DIN Rail; 1 m (39-1/3 in.) long
BKT287-3R	DIN Rail; 0.61 m (24 in.) long
BKT287-4R	DIN Rail; 0.36 m (14 in.) long
PLT344-1R	DIN Rail End Clamps (2 clamps)
WHA-C450-100C	System 450 module connection extension cable, 100 cm (3.3 ft) long

Technical Specifications

C450CPW-100C Control Module with Hybrid Analog Output

Product	C450CPW-100C System 450 control module is a sensing control and operating control with LCD, four-button touchpad, and analog output with pulse-width modulation capability.
Power Consumption	C450CPW-100C: 1.3 VA maximum using 0–10 V out; 1.5 VA maximum using 4–20 mA out
Supply Power	**Internal Supply Power:** C450YNN-1C Power Supply Module **External Supply Power:** 24 VAC (20–30 VAC) Safety Extra-Low Voltage (SELV) (Europe), Class 2 (North America), 50/60 Hz, 10 VA minimum **Note:** A System 450 control module or module assembly can use an internal or an external supply power source, but must not be connected to both simultaneously.
Ambient Operating Conditions	**Temperature:** -40 to 66°C (-40 to 150°F) when using 0–10 VDC outputs; -40 to 40°C (-40 to 104°F) when using 4–20 mA outputs **Humidity:** Up to 95% RH noncondensing; maximum dew point 29°C (85°F)
Ambient Shipping and Storage Conditions	**Temperature:** -40 to 80°C (-40 to 176°F) **Humidity:** Up to 95% RH noncondensing; maximum dew point 29°C (85°F)
Input Signal	0–5 VDC for humidity sensors and static pressure transducers 0.5–4.5 VDC for ratiometric pressure transducers 1,035 ohms at 25°C (77°F) for A99 PTC temperature sensors 1,000 ohms at 21.1°C (70°F) for TE-6xxx Nickel temperature sensors
Analog Output	**Voltage Mode (0–10 VDC):** 10 VDC maximum output voltage 10 mA maximum output current Requires an external load of 1,000 ohms or more The AO operates in Voltage Mode when connected to devices with impedance greater than 1,000 ohms. Devices that fall below 1,000 ohms may not operate as intended with Voltage Mode applications.
	Current Mode (4–20 mA): Requires an external load between 0–300 ohms The AO operates in Current Mode when connected to devices with impedance less than 300 ohms. Devices that rise above 300 ohms may not operate as intended with Current Mode applications.
Analog Input Accuracy	**Resolution:** 14 bits
Control Construction	Independently mounted control, surface mounted with Lexan® 950 enclosure suitable for DIN rail mounting or direct mounting to a hard, even surface.
Dimensions (H x W x D)	127 x 61 x 61 mm (5 x 2-3/8 x 2-3/8 in.)
Weight	C450CPW-100C: 195 g (0.43 lb)
Compliance CE	**North America:** cULus Listed; UL 60730, File E27734; FCC Compliant to CFR47, Part 15, Subpart B, Class B Industry Canada (IC) Compliant to Canadian ICES-003, Class B limits
	Europe: CE Mark – Johnson Controls, Inc. declares that this product is in compliance with the essential requirements and other relevant provisions of the EMC Directive and the Low Voltage Directive.
	Australia: Mark: C-Tick Compliant (N1813)

The performance specifications are nominal and conform to acceptable industry standards. For applications at conditions beyond these specifications, consult the local Johnson Controls office. Johnson Controls, Inc. shall not be liable for damages resulting from misapplication or misuse of its products. © 2015 Johnson Controls, Inc.

System 450™ Expansion Modules with Analog Output

Description

System 450 expansion modules allow you to increase the number of outputs in your control system to meet your application requirements. The following models are available:

- C450SPN-1C: Analog Expansion Module with one analog output (each 0–10 VDC or 4–20 mA)
- C450SQN-1C: Analog Expansion Module with two analog outputs (each 0–10 VDC or 4–20 mA)

Refer to the following documents for important product application information:

- *System 450™ Series Modular Controls Product Bulletin (LIT-12011458)*
- *System 450™ Series Expansion Modules with Analog Outputs Installation Instructions (Part No. 24-7664-2799)*

Features

- Durable, compact, interchangeable modular components with plug-together connectors and DIN rail or direct wall mount capability eliminate field wiring between modules and allow you to quickly and easily design, assemble, install, and upgrade your control systems.
- Versatile, multipurpose, field-configurable control modules and expansion modules designed for global use allow you to create a wide variety of application-specific control systems capable of controlling temperature, pressure, or humidity, or all three conditions simultaneously, with only a small suite of module models.
- Up to three hard-wired input sensors and up to ten relay or analog outputs (in any combination) per control system allow you to build complex custom control systems while reducing your control system cost to only the cost of the required components.



C450SQN-1C Expansion Module with Analog Output

Repair Information

If the System 450™ Expansion Module with Analog Output fails to operate within its specifications, replace the unit. For a replacement System 450™ Expansion Module with Analog Output, contact a Johnson Controls® representative.

Selection Chart

Expansion System 450 Modules and Accessories Ordering Information

Product Code Number	Product Description
C450SPN-1C	Analog Output Expansion Module; provides one analog output (0–10 VDC or 4–20 mA self-selecting signal) for proportional control.
C450SQN-1C	Analog Output Expansion Module; provides two analog outputs (0–10 VDC or 4–20 mA self-selecting signals) for proportional control.
BKT287-1R	DIN Rail; 0.30 m (12 in.) long
BKT287-2R	DIN Rail; 1 m (39-1/3 in.) long
BKT287-3R	DIN Rail; 0.61 m (24 in.) long
BKT287-4R	DIN Rail; 0.36 m (14 in.) long
PLT344-1R	DIN Rail End Clamps (2 clamps)
WHA-C450-100C	System 450 module connection extension cable, 100 cm (3.3 ft) long

The performance specifications are nominal and conform to acceptable industry standards. For applications at conditions beyond these specifications, consult the local Johnson Controls office. Johnson Controls, Inc. shall not be liable for damages resulting from misapplication or misuse of its products. © 2015 Johnson Controls, Inc.

System 450™ Expansion Modules with Analog Output (Continued)

Technical Specifications

C450SPN-1C and C450SQN-1C Expansion Modules with Analog Output

Product	C450SPN-1C: System 450 Expansion Module with one analog output C450SQN-1C: System 450 Expansion Module with two analog outputs
Power Consumption	C450SPN-1C: 1.1 VA maximum using 0–10 V out; 1.3 VA maximum using 4–20 mA out C450SQN-1C: 1.8 VA maximum using 0–10 V out; 2.2 VA maximum using 4–20 mA out
Supply Power	**Internal Supply Power:** C450YNN-1C Power Supply Module **External Supply Power:** 24 VAC (20–30 VAC) Safety Extra-Low Voltage (SELV) (Europe), Class 2 (North America), 50/60 Hz, 10 VA minimum **Note:** A System 450 control module or module assembly can use an internal or an external supply power source, but must not be connected to both simultaneously.
Ambient Operating Conditions	**Temperature:** -40 to 66°C (-40 to 150°F) when using 0 to 10 VDC outputs; -40 to 40°C (-40 to 104°F) when using 4 to 20 mA outputs **Humidity:** Up to 95% RH noncondensing; maximum dew point 29°C (85°F)
Ambient Shipping and Storage Conditions	**Temperature:** -40 to 80°C (-40 to 176°F) **Humidity:** Up to 95% RH noncondensing; maximum dew point 29°C (85°F)
Analog Output	**Voltage Mode (0 to 10 VDC):** 10 VDC maximum output voltage 10 mA maximum output current Requires an external load of 1,000 ohms or more The AO operates in Voltage Mode when connected to devices with impedance greater than 1,000 ohms. Devices that drop below 1,000 ohms may not operate as intended with Voltage Mode applications.
	Current Mode (4 to 20 mA): Requires an external load between 0 to 300 ohms The AO operates in Current Mode when connected to devices with impedances less than 300 ohm. Devices that exceed 300 ohms may not operate as intended with Current Mode applications.
Control Construction	Independently mounted control, surface mounted with Lexan® 950 enclosure suitable for DIN rail mounting or direct mounting to a hard, even surface.
Dimensions (H x W x D)	127 x 61 x 61 mm (5 x 2-3/8 x 2-3/8 in.)
Weight	C450SPN-1C: 150 g (0.33 lb) C450SQN-1C: 150 g (0.33 lb)
Compliance CE	**North America:** cULus Listed; UL 60730, File E27734, Vol. 1; FCC Compliant to CFR47, Part 15, Subpart B, Class B Industry Canada (IC) Compliant to Canadian ICES-003, Class B limits
	Europe: CE Mark - Johnson Controls, Inc., declares that this product is in compliance with the essential requirements and other relevant provisions of the Low Voltage Directive and the EMC Directive.
	Australia: Mark: C-Tick Compliant (N1813)

The performance specifications are nominal and conform to acceptable industry standards. For applications at conditions beyond these specifications, consult the local Johnson Controls office. Johnson Controls, Inc. shall not be liable for damages resulting from misapplication or misuse of its products. © 2015 Johnson Controls, Inc.

System 450™ Expansion Modules with Relay Output

Description

System 450 expansion modules allow you to increase the number of outputs in your control system to meet your application requirements. The following models are available:

- C450SBN-3C: Relay Expansion Module with one relay output
- C450SCN-3C: Relay Expansion Module with two relay outputs

Refer to the following documents for important product application information:

- *System 450™ Series Modular Controls Product Bulletin (LIT-12011458)*
- *System 450™ Series Expansion Modules with Relay Outputs Installation Instructions (Part No. 24-7664-2896)*

Features

- Durable, compact, interchangeable modular components with plug-together connectors and DIN rail or direct wall mount capability eliminate field wiring between modules and allow you to quickly and easily design, assemble, install, and upgrade your control systems.
- Versatile, multipurpose, field-configurable control modules and expansion modules designed for global use allow you to create a wide variety of application-specific control systems capable of controlling temperature, pressure, or humidity, or all three conditions simultaneously, with only a small suite of module models.
- Up to three hard-wired input sensors and up to ten relay or analog outputs (in any combination) per control system allow you to build complex custom control systems while reducing your control system cost to only the cost of the required components.



C450SCN-3C Expansion Module with Relay Output

Repair Information

If the System 450™ Expansion Module with Relay Output fails to operate within its specifications, replace the unit. For a replacement System 450™ Expansion Module with Relay Output, contact a Johnson Controls® representative.

Selection Chart

Expansion System 450 Modules and Accessories Ordering Information

Product Code Number	Product Description
C450SBN-3C	Reset Control Module with LCD, Four-Button Touchpad UI, and SPDT relay output; provides one SPDT output relay. One A99BC-25C temperature sensor with 0.25 m (9-1/4 in.) silicon leads and one A99BC-300C temperature sensor with 3 m (9 ft 10 in.) silicon leads are included in the box with the Reset Control Module.
C450SCN-3C	Reset Control Module with LCD, Four-Button Touchpad UI, and SPDT relay output; provides two SPDT output relays. One A99BC-25C temperature sensor with 0.25 m (9-1/4 in.) silicon leads and one A99BC-300C temperature sensor with 3 m (9 ft 10 in.) silicon leads are included in the box with the Reset Control Module.
BKT287-1R	DIN Rail; 0.30 m (12 in.) long
BKT287-2R	DIN Rail; 1 m (39-1/3 in.) long
BKT287-3R	DIN Rail; 0.61 m (24 in.) long
BKT287-4R	DIN Rail; 0.36 m (14 in.) long
PLT344-1R	DIN Rail End Clamps (2 clamps)
WHA-C450-100C	System 450 module connection extension cable, 100 cm (3.3 ft) long

The performance specifications are nominal and conform to acceptable industry standards. For applications at conditions beyond these specifications, consult the local Johnson Controls office. Johnson Controls, Inc. shall not be liable for damages resulting from misapplication or misuse of its products. © 2015 Johnson Controls, Inc.

System 450™ Expansion Modules with Relay Output (Continued)

Technical Specifications

C450SBN-3C and C450SCN-3C Expansion Modules with Relay Output

Product	C450SBN-3C: System 450 Expansion Module with one SPDT output relay C450SCN-3C: System 450 Expansion Module with two SPDT output relays
Power Consumption	C450SBN-3C: 0.8 VA maximum C450SCN-3C: 1.2 VA maximum
Supply Power	**Internal Supply Power:** C450YNN-1C Power Supply Module **External Supply Power:** 24 VAC (20–30 VAC) Safety Extra-Low Voltage (SELV) (Europe), Class 2 (North America), 50/60 Hz, 10 VA minimum **Note:** A System 450 control module or module assembly can use an internal or an external supply power source, but must not be connected to both simultaneously.
Ambient Operating Conditions	**Temperature:** -40 to 66°C (-40 to 150°F) **Humidity:** Up to 95% RH noncondensing; maximum dew point 29°C (85°F)
Ambient Shipping and Storage Conditions	**Temperature:** -40 to 80°C (-40 to 176°F) **Humidity:** Up to 95% RH noncondensing; maximum dew point 29°C (85°F)
Output Relay Contacts	**General:** 1/2 HP at 120/240 VAC, SPDT
	Specific: AC Motor Ratings — 120 VAC — 208/240 VAC AC Full-Load Amperes: 9.8 A 4.9 A AC Locked-Rotor Amperes: 58.8 A 29.4 A 10 Amperes AC Noninductive at 24/240 VAC Pilot Duty: 125 VA at 24/240 VAC
Control Construction	Independently mounted control, surface mounted with Lexan® 950 enclosure suitable for DIN rail mounting or direct mounting to a hard, even surface.
Dimensions (H x W x D)	127 x 61 x 61 mm (5 x 2-3/8 x 2-3/8 in.)
Weight	C450SBN-3C: 172 g (0.38 lb) C450SCN-3C: 186 g (0.41 lb)
Compliance CE	**North America:** cULus Listed; UL 60730, File E27734; FCC Compliant to CFR47, Part 15, Subpart B, Class B Industry Canada (IC) Compliant to Canadian ICES-003, Class B limits
	Europe: CE Mark – Johnson Controls, Inc. declares that this product is in compliance with the essential requirements and other relevant provisions of the EMC Directive and the Low Voltage Directive.
	Australia: Mark: C-Tick Compliant (N1813)

The performance specifications are nominal and conform to acceptable industry standards. For applications at conditions beyond these specifications, consult the local Johnson Controls office. Johnson Controls, Inc. shall not be liable for damages resulting from misapplication or misuse of its products. © 2015 Johnson Controls, Inc.

System 450™ Power Module

Description

System 450™ modules require 24 VAC, Class 2 power. In applications where 24 VAC power is not available, the C450YNN-1C Power Module provides a convenient modular solution for transforming 120/240 VAC to 24 VAC power for your System 450 control systems.

Refer to the following documents for important product application information:

- *System 450™ Series Modular Controls Product Bulletin (LIT-12011458)*
- *System 450™ Series Power Module Installation Instructions (Part No. 24-7664-2691)*

Features

- Durable, compact, interchangeable modular components with plug-together connectors and DIN rail or direct wall mount capability eliminate field wiring between modules and allow you to quickly and easily design, assemble, install, and upgrade your control systems.

Repair Information

If the System 450 Power Module fails to operate within its specifications, replace the unit. For a replacement System 450 Power Module, contact a Johnson Controls® representative.



C450YNN-1C Power Module

Selection Chart

Power System 450 Modules and Accessories Ordering Information

Product Code Number	Product Description
C450YNN-1C	Power Module; provides 24 V to System 450 Module Assembly; 120 VAC or 240 VAC supply power input terminals.
BKT287-1R	DIN Rail; 0.30 m (12 in.) long
BKT287-2R	DIN Rail; 1 m (39-1/3 in.) long
BKT287-3R	DIN Rail; 0.61 m (24 in.) long
BKT287-4R	DIN Rail; 0.36 m (14 in.) long
PLT344-1R	DIN Rail End Clamps (2 clamps)
WHA-C450-100C	System 450 module connection extension cable, 100 cm (3.3 ft) long

Technical Specifications

C450YNN-1C Power Supply Module

Product	C450YNN-1C: System 450 Power Supply Module; 120 or 240 VAC stepdown to 24 VAC Class 2 (North America) or SELV (Europe)
Supply Power	110/120 VAC or 220/240 VAC at 50/60 Hz (100 mA maximum)
Secondary Power	24 VAC, 10 VA
Ambient Operating Conditions	**Temperature:** -40 to 66°C (-40 to 150°F) **Humidity:** Up to 95% RH noncondensing; maximum dew point 29°C (85°F)
Ambient Shipping and Storage Conditions	**Temperature:** -40 to 80°C (-40 to 176°F) **Humidity:** Up to 95% RH noncondensing; maximum dew point 29°C (85°F)
Control Construction	Independently mounted control, surface mounted with Lexan® 950 enclosure suitable for DIN rail mounting or direct mounting to a hard, even surface.
Dimensions (H x W x D)	127 x 61 x 61 mm (5 x 2-3/8 x 2-3/8 in.)
Weight	C450YNN-1C: 390 gm (0.86 lb)
Compliance CE	**North America:** cULus Listed; UL 60730, File E27734: FCC Compliant to CFR47, Part 15, Subpart B, Class B Industry Canada (IC) Compliant to Canadian ICES-003, Class B limits
	Europe: CE Mark – Johnson Controls, Inc. declares that this product is in compliance with the essential requirements and other relevant provisions of the EMC Directive and the Low Voltage Directive.
	Australia: Mark: C-Tick Compliant (N1813)

The performance specifications are nominal and conform to acceptable industry standards. For applications at conditions beyond these specifications, consult the local Johnson Controls office. Johnson Controls, Inc. shall not be liable for damages resulting from misapplication or misuse of its products. © 2015 Johnson Controls, Inc.

System 450™ Compatible Sensors, Transducers, and Accessories

Description

System 450 control modules are designed to operate with a variety of compatible sensors and transducers. The System 450 compatible sensors and transducers cover a wide range of temperature, pressure, and humidity conditions, allowing you to select the sensor or transducer that best fits your control system requirements.

For ease of installation and setup, the Sensor Type that you select in the UI for a sensor or transducer automatically determines the sensed condition, unit of measurement, minimum differential, setup value ranges, and the default setup values for each control system output that references the sensor or transducer.

Refer to the *System 450™ Series Modular Controls Product Bulletin (LIT-12011458)* for important product application information on System 450 Controls.

Refer to the following documents for important product application information on sensors used with System 450 Controls:

- *A99B Series Temperature Sensors Product Technical Bulletin (LIT-125186)*
- *TrueRH™ Series HE-67xx Humidity Element with Temperature Sensors Product Bulletin (LIT-216245)*
- *HE-6800 Series Humidity Transmitters with Temperature Sensor Product Bulletin (LIT-12011625)*
- *P499 Series Electronic Pressure Transducers Product/Technical Bulletin (LIT-12011190)*
- *TE-6000 Series Temperature Sensing Elements Product Bulletin (LIT-216288)*
- *TE-6300 Series Temperature Sensors Product Bulletin (LIT-216320)*
- *TE-6800 Series Temperature Sensors Product Bulletin (LIT-12011542)*
- *Setra Systems Model DPT265 Very Low Differential Pressure Transducer Catalog Page*



Duct-Mount HE67S3 Humidity Sensor

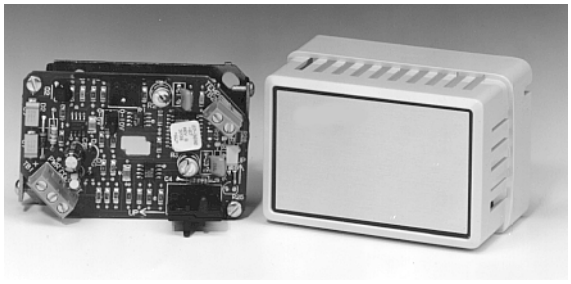

Wall-Mount HE67S3 Humidity Sensor



DPT265 Series Low Pressure Differential Pressure Transducers



A99 Temperature Sensors



TE-6300 Series Temperature Sensors



TE-6000-1 Temperature Sensing Element

The performance specifications are nominal and conform to acceptable industry standards. For applications at conditions beyond these specifications, consult the local Johnson Controls office. Johnson Controls, Inc. shall not be liable for damages resulting from misapplication or misuse of its products. © 2015 Johnson Controls, Inc.

System 450™ Compatible Sensors, Transducers, and Accessories (Continued)



TE-6800 Series Wall Mount Temperature Sensors and HE-6800 Series Humidity Transmitters with Temperature Sensors



P499 Series Electronic Pressure Transducers

Selection Charts

Use these tables to order System 450 compatible sensors, transducers, and accessories.

System 450 Compatible A99B Temperature Sensors and Accessories Ordering Information[1]

Product Code Number	Product Description
A99BA-200C	PTC Silicon Sensor with Shielded Cable; Cable Length 2 m (6-1/2 ft); Sensor Temperature Range: -40 to 120°C (-40 to 250°F) Cable Jacket Temperature Range: -40 to 100°C (-40 to 212°F)
A99BB-25C	PTC Silicon Sensor with PVC Cable; Cable Length 0.25 m (9-3/4 in.); Sensor Temperature Range: -40 to 120°C (-40 to 250°F) Cable Jacket Temperature Range: -40 to 100°C (-40 to 212°F)
A99BB-200C	PTC Silicon Sensor with PVC Cable; Cable Length 2 m (6-1/2 ft); Sensor Temperature Range: -40 to 120°C (-40 to 250°F) Cable Jacket Temperature Range: -40 to 100°C (-40 to 212°F)
A99BB-300C	PTC Silicon Sensor with PVC Cable; Cable Length 3 m (9-3/4 ft); Sensor Temperature Range: -40 to 120°C (-40 to 250°F) Cable Jacket Temperature Range: -40 to 100°C (-40 to 212°F)
A99BB-500C	PTC Silicon Sensor with PVC Cable; Cable Length 5 m (16-3/8 ft); Sensor Temperature Range: -40 to 120°C (-40 to 250°F) Cable Jacket Temperature Range: -40 to 100°C (-40 to 212°F)
A99BB-600C	PTC Silicon Sensor with PVC Cable; Cable Length 6 m (19-1/2 ft); Sensor Temperature Range: -40 to 120°C (-40 to 250°F) Cable Jacket Temperature Range: -40 to 100°C (-40 to 212°F)
A99BC-25C	PTC Silicon Sensor with High Temperature Silicon Cable; Cable Length 0.25 m (9-3/4 in.); Sensor Temperature Range: -40 to 120°C (-40 to 250°F) Cable Jacket Rated for Full Sensor Temperature Range.
A99BC-300C	PTC Silicon Sensor with High Temperature Silicon Cable; Cable Length 3 m (9-3/4 ft) Sensor Temperature Range: -40 to 120°C (-40 to 250°F) Cable Jacket Rated for Full Sensor Temperature Range.
A99BC-1500C	PTC Silicon Sensor with High Temperature Silicon Cable; Cable Length 15 m (49 ft) Sensor Temperature Range: -40 to 120°C (-40 to 250°F) Cable Jacket Rated for Full Sensor Temperature Range.
BOX10A-600R	PVC Enclosure for A99 Sensor; Includes Wire Nuts and Conduit Connector (for Outdoor Sensor)
WEL11A-601R	Immersion Well for A99 Sensor Liquid Sensing Applications
A99-CLP-1	Mounting Clip for A99 Temperature Sensor
ADP11A-600R	Conduit Adaptor, 1/2 in. Snap-Fit EMT Conduit Adaptor (box of 10)
TE-6001-1	Duct Mounting Hardware with Handy Box for A99 Sensor
TE-6001-11	Duct Mounting Hardware without Handy Box for A99 Sensor
SHL10A-603R	Sun Shield (for Use with Outside A99 Sensors in Sunny Locations)

1. Refer to the *A99B Series Temperature Sensors Product/Technical Bulletin (LIT-125186)* on the Johnson Controls® Product Literature website for more information.

System 450 Compatible TE-6000 Series 1,000 Ohm Nickel Temperature Sensors and Accessories Ordering Information

Product Code Number	Product Description
TE-6000-x	TE6000 Series 1,000 ohm at 70°F nickel temperature sensors (only). Only the TE-6000-6 sensor can be used for the entire HI°C and HI°F temperature range. Different sensing element packages are available for various applications.For a complete list of compatible 1,000 ohm nickel sensors, including sensor descriptions, technical specifications, and mounting accessories, refer to the *TE-6000 Series Temperature Sensing Elements Product Bulletin (LIT-216288)*. (System 450 Sensor Types HI°C and HI°F)

System 450 Compatible TE-6300 Series 1,000 Ohm Nickel Temperature Sensors and Accessories Ordering Information

Product Code Number	Product Description
TE-631xx-x	TE6300 Series 1,000 ohm at 70°F nickel averaging and 1,000 ohm thin-film nickel temperature sensors (only). For a complete list of compatible 1,000 ohm nickel averaging and thin-film nickel sensors, including sensor descriptions, technical specifications, and mounting accessories, refer to the *TE-6300 Series Temperature Sensors Product Bulletin (LIT-216320)*. (System 450 Sensor Types HI°C and HI°F)

The performance specifications are nominal and conform to acceptable industry standards. For applications at conditions beyond these specifications, consult the local Johnson Controls office. Johnson Controls, Inc. shall not be liable for damages resulting from misapplication or misuse of its products. © 2015 Johnson Controls, Inc.

System 450™ Compatible Sensors, Transducers, and Accessories (Continued)

System 450 Compatible TE-68NT-0N00S 1,000 Ohm Nickel Temperature Sensor Ordering Information

Product Code Number	Product Description
TE-68NT-0N00S	TE6800 Series 1,000 ohm nickel temperature sensor for wall-mount applications. For more information, including sensor description, technical specifications, and mounting accessories, refer to the *TE-6800 Series Temperature Sensors Product Bulletin (LIT-12011542)*. (System 450 Sensor Types HI°C and HI°F**)**

System 450 Compatible HE67S3 Type Humidity Sensors with Integral A99B Temperature Sensor Ordering Information[1]

Product Code Number	Product Description
HE-67S3-0N0BT	Wall Mount Humidity Sensor with A99B Type Temperature Sensor: 10 to 90% RH; 0 to 60°C (32 to 140°F)
HE-67S3-0N00P	Duct Mount Humidity Sensor with A99B Type Temperature Sensor: 10 to 90% RH; 0 to 60°C (32 to 140°F)

1. The HE-67S3 sensors require 24 VAC input and must use the 0–5 VDC output. Refer to the *TrueRH Series HE-67xx Humidity Element with Temperature Sensors Product Bulletin (LIT-216245)* on the Johnson Controls Product Literature website for more information, including technical specifications and mounting accessories.

System 450 Compatible HE6800 Series Humidity Transmitters with Temperature Sensor Ordering Information[1]

Product Code Number	Product Description
HE-68N2-0N00WS	Wall Mount Humidity Transmitter with Nickel Temperature Sensor: 10 to 90 ±2% RH; 0 to 55°C (32 to 131°F)
HE-68N3-0N00WS	Wall Mount Humidity Transmitter with Nickel Temperature Sensor: 10 to 90 ±3% RH; 0 to 55°C (32 to 131°F)

1. The HE-6800 transmitters require 24 VAC input and must use the 0–5 VDC output. Refer to the *HE-6800 Series Humidity Transmitters with Temperature Sensor Product Bulletin (LIT-12011625)* on the Johnson Controls Product Literature website for more information, including technical specifications and mounting accessories.

System 450 Compatible Low Pressure Differential Transducer Ordering Information[1] [2]

Product Code Number	Product Description
DPT2650-R25B-AB	Low Pressure Differential Transducer: -0.25 to 0.25 in. W.C. (System 450 Sensor Type: **P 0.25**)[3]
DPT2650-0R5D-AB	Low Pressure Differential Transducer: 0 to 0.5 in. W.C. (System 450 Sensor Type: **P 0.5**)
DPT2650-2R5D-AB	Low Pressure Differential Transducer: 0 to 2.5 in. W.C. (System 450 Sensor Type: **P 2.5**)
DPT2650-005D-AB	Low Pressure Differential Transducer: 0 to 5.0 in. W.C. (System 450 Sensor Type: **P 5**)
DPT2650-10D-AB	Low Pressure Differential Transducer: 0 to 10 in. W.C. (System 450 Sensor Type: **P 10**)

1. Refer to the *Setra Systems Model DPT265 Very Low Differential Pressure Transducer Catalog Page* on the Johnson Controls Product Literature website for more information.
2. The DPT265 sensors require 24 VAC input and must use the 0–5 VDC output. Refer to the *Setra Systems Model DPT265 Very Low Differential Pressure Transducer Catalog Page* on the Johnson Controls Product Literature website for more information.
3. Used only with Communications Control Modules.

System 450 Compatible P499 Series Transducers with 1/4 in. SAE 45 Flare Internal Thread with Depressor (Style 47) Ordering Information[1]

Product Code Number	Product Description
P499RCP-401C	-1 to 8 bar; order WHA-PKD3 type wire harness separately
P499RCP-402C	-1 to 15 bar; order WH A-PKD3 type wire harness separately
P499RCP-404C	0 to 30 bar; order WHA-PKD3 type wire harness separately
P499RCP-405C	0 to 50 bar; order WHA-PKD3 type wire harness separately
P499RCPS100C	-10 to 100 psis (sealed for wet and freeze/thaw applications); order WHA-PKD3 type wire harness separately
P499RCPS100K	-10 to 100 psis (sealed for wet and freeze/thaw applications); WHA-PKD3-200C wire harness included
P499RCPS102C	0 to 200 psis (sealed for wet and freeze/thaw applications); order WHA-PKD3 type wire harness separately
P499RCPS102K	0 to 200 psis (sealed for wet and freeze/thaw applications); WHA-PKD3-200C wire harness included
P499RCP-101C	0 to 100 psig; order WHA-PKD3 type wire harness separately
P499RCP-101K	0 to 100 psig; WHA-PKD3-200C wire harness included
P499RCP-105C	0 to 500 psig; order WHA-PKD3 type wire harness separately
P499RCP-105K	0 to 500 psig; WHA-PKD3-200C wire harness included
P499RCP-107C	0 to 750 psig; order WHA-PKD3 type wire harness separately
P499RCP-107K	0 to 750 psig; WHA-PKD3-200C wire harness included

1. The P499 sensors must be powered with the +5 VDC and C terminals and the output is 0.5 to 4.5 VDC. Refer to the *P499 Series Electronic Pressure Transducers Product/Technical Bulletin (LIT-12011190)* on the Johnson Controls Product Literature website for more information.

The performance specifications are nominal and conform to acceptable industry standards. For applications at conditions beyond these specifications, consult the local Johnson Controls office. Johnson Controls, Inc. shall not be liable for damages resulting from misapplication or misuse of its products. © 2015 Johnson Controls, Inc.

System 450™ Compatible Sensors, Transducers, and Accessories (Continued)

System 450 Compatible P499 Series Transducers with 1/8 in. 27 NPT External Thread (Style 49) Ordering Information[1]

Product Code Number	Product Description
P499RAPS100C	-10 to 100 psis (sealed for wet and freeze/thaw applications); order WHA-PKD3 type wire harness separately
P499RAPS100K	-10 to 100 psis (sealed for wet and freeze/thaw applications); WHA-PKD3-200C wire harness included
P499RAPS102C	0 to 200 psis (sealed for wet and freeze/thaw applications); order WHA-PKD3 type wire harness separately
P499RAPS102K	0 to 200 psis (sealed for wet and freeze/thaw applications); WHA-PKD3-200C wire harness included
P499RAP-101C	0 to 100 psig; order WHA-PKD3 type wire harness separately
P499RAP-101K	0 to 100 psig; WHA-PKD3-200C wire harness included
P499RAP-102C	0 to 200 psig; order WHA-PKD3 type wire harness separately
P499RAP-105C	0 to 500 psig; order WHA-PKD3 type wire harness separately
P499RAP-105K	0 to 500 psig; WHA-PKD3-200C wire harness included
P499RAP-107C	0 to 750 psig; order WHA-PKD3 type wire harness separately
P499RAP-107K	0 to 750 psig; WHA-PKD3-200C wire harness included

1. The P499 sensors must be powered with the +5 VDC and C terminals and the output is 0.5 to 4.5 VDC. Refer to the *P499 Series Electronic Pressure Transducers Product/Technical Bulletin (LIT-12011190)* on the Johnson Controls Product Literature website for more information.

WHA-PKD3 Wire Harnesses Ordering Information[1]

Product Code Number	Product Description
WHA-PKD3-200C	Plug and 3-Wire Harness for P499 Electronic Pressure Transducers: 2.0 m (6-1/2 ft) cable
WHA-PKD3-400C	Plug and 3-Wire Harness for P499 Electronic Pressure Transducers: 4.0 m (13 ft) cable
WHA-PKD3-600C	Plug and 3-Wire Harness for P499 Electronic Pressure Transducers: 6.0 m (19-5/8 ft) cable

1. Refer to the *P499 Series Electronic Pressure Transducers Product/Technical Bulletin (LIT-12011190)* on the Johnson Controls Product Literature website for more information.

The performance specifications are nominal and conform to acceptable industry standards. For applications at conditions beyond these specifications, consult the local Johnson Controls office. Johnson Controls, Inc. shall not be liable for damages resulting from misapplication or misuse of its products. © 2015 Johnson Controls, Inc.

Hot Water Supply Loop Reset

IMPORTANT: Use this System 450™ modular control assembly only as an operating control. Where failure or malfunction of the System 450 modular control assembly could lead to personal injury or property damage to the controlled equipment or other property, additional precautions must be designed into the control system. Incorporate and maintain other devices, such as supervisory or alarm systems or safety or limit controls, intended to warn of or protect against failure or malfunction of the System 450 modular control assembly.

Refer to the *System 450 Series Modular Control Systems with Reset Control Modules Technical Bulletin (LIT-12011842)*, the *System 450 Series Modular Controls Product Bulletin (LIT-12011458)*, and the installation instructions for product specifications, detailed installation procedures, and important product safety information.

A hot water supply reset application saves energy and provides better space control by preventing overheating or underheating due to changes in outdoor air temperature. The following diagram illustrates how to set up the boiler, sensors, and mixing valve. Information on the following pages illustrates how to wire the control modules and how to enter the appropriate values in the sensor setup screen.

Note: In this example, the boiler water temperature is not being reset. Only the heating supply water loop temperature is being reset.

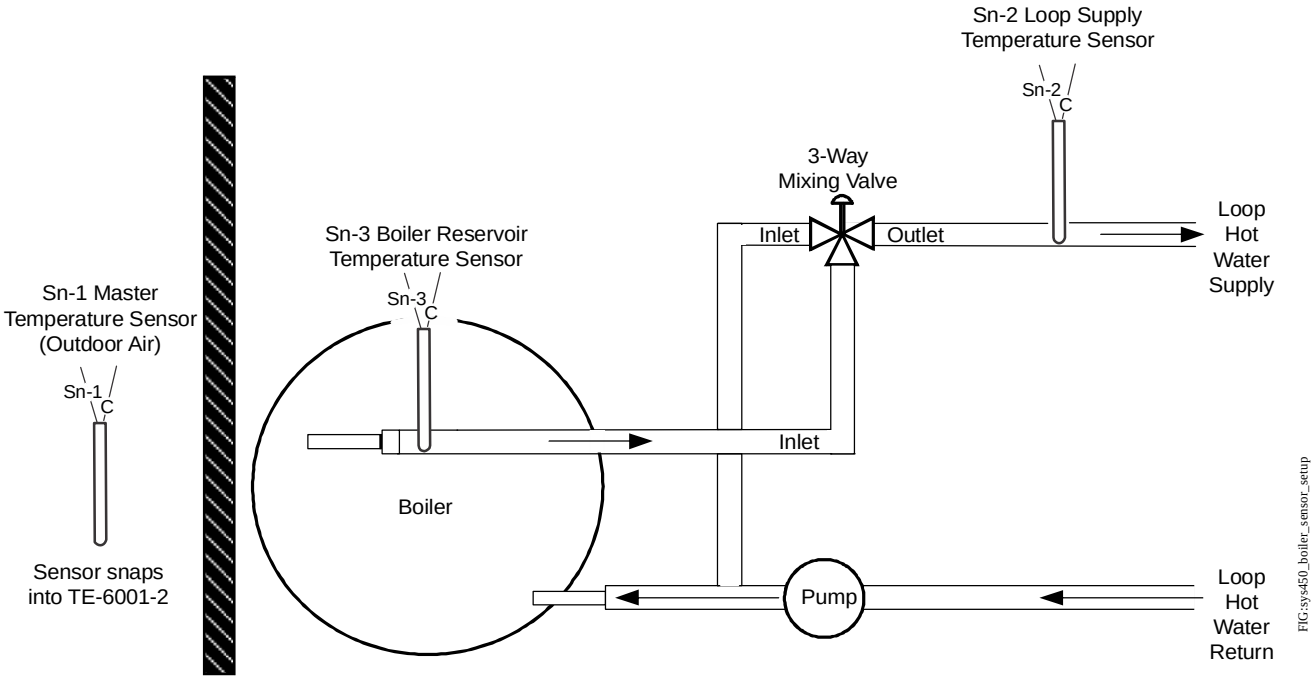

Boiler, Sensor, and Mixing Valve Setup

The performance specifications are nominal and conform to acceptable industry standards. For applications at conditions beyond these specifications, consult the local Johnson Controls office. Johnson Controls, Inc. shall not be liable for damages resulting from misapplication or misuse of its products. © 2015 Johnson Controls, Inc. **www.johnsoncontrols.com**

Hot Water Supply Loop Reset (Continued)

The following diagram illustrates how to wire the control system for a hot water supply reset application.

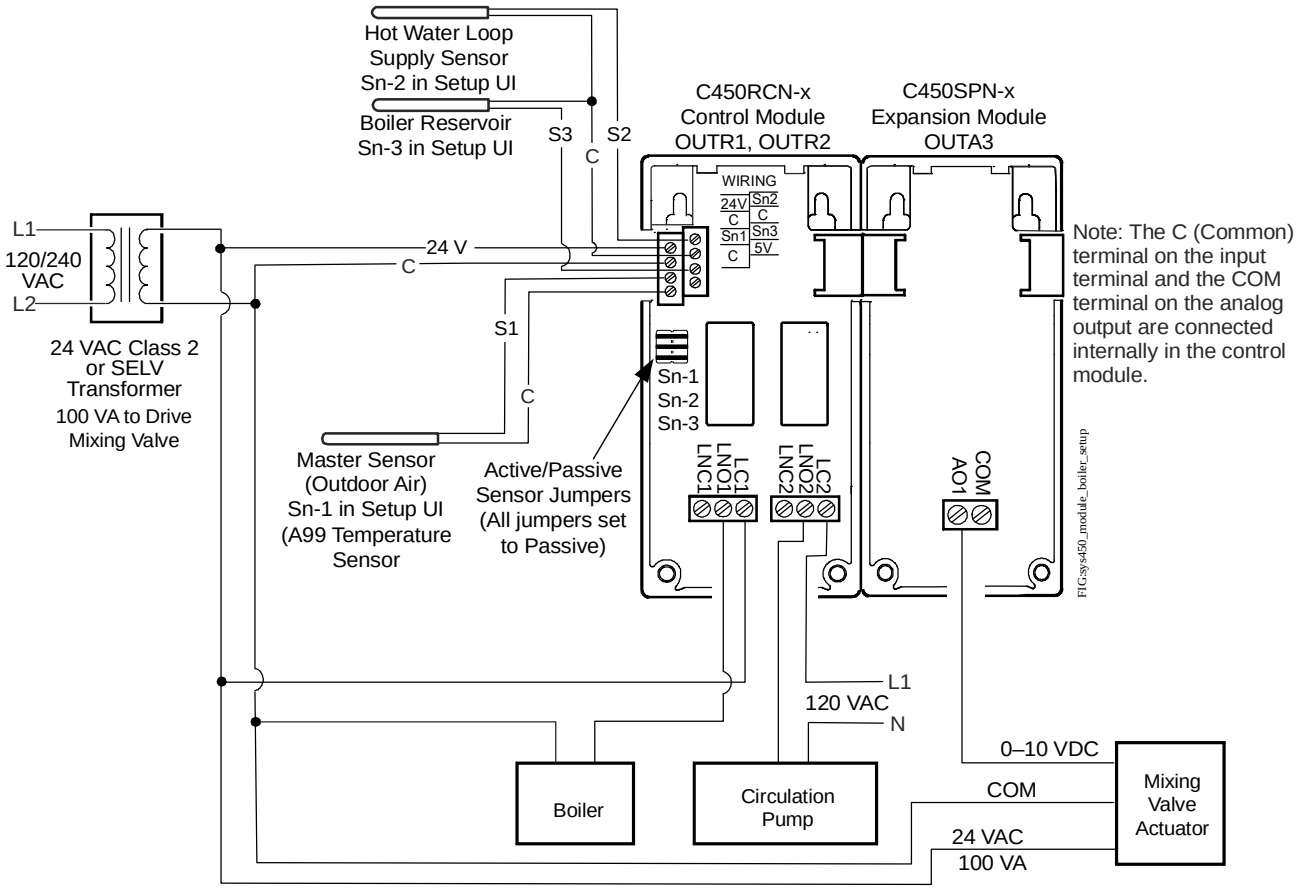

Hot Water Supply Reset Wiring Using a C450RCN-x Reset Control Module, a C450SPN-x Expansion Module, and an External Power Supply

The performance specifications are nominal and conform to acceptable industry standards. For applications at conditions beyond these specifications, consult the local Johnson Controls office. Johnson Controls, Inc. shall not be liable for damages resulting from misapplication or misuse of its products. © 2015 Johnson Controls, Inc. **www.johnsoncontrols.com**

Hot Water Supply Loop Reset (Continued)

With the control system wired, select Sn-3 for OUTR1 to control the boiler temperature. Select Sn-1 for OUTR2 to control the water circulation pump. To control the supply loop temperature based on a reset setpoint, use a mixing valve, along with the analog output of the C450SPN-x Expansion Module. Set up the Reset Setpoint Sensor (rES) and select the rES sensor to control OUTA3 and the mixing valve actuator.

The diagrams on the following pages illustrate how the values for the reset setpoint values are calculated.

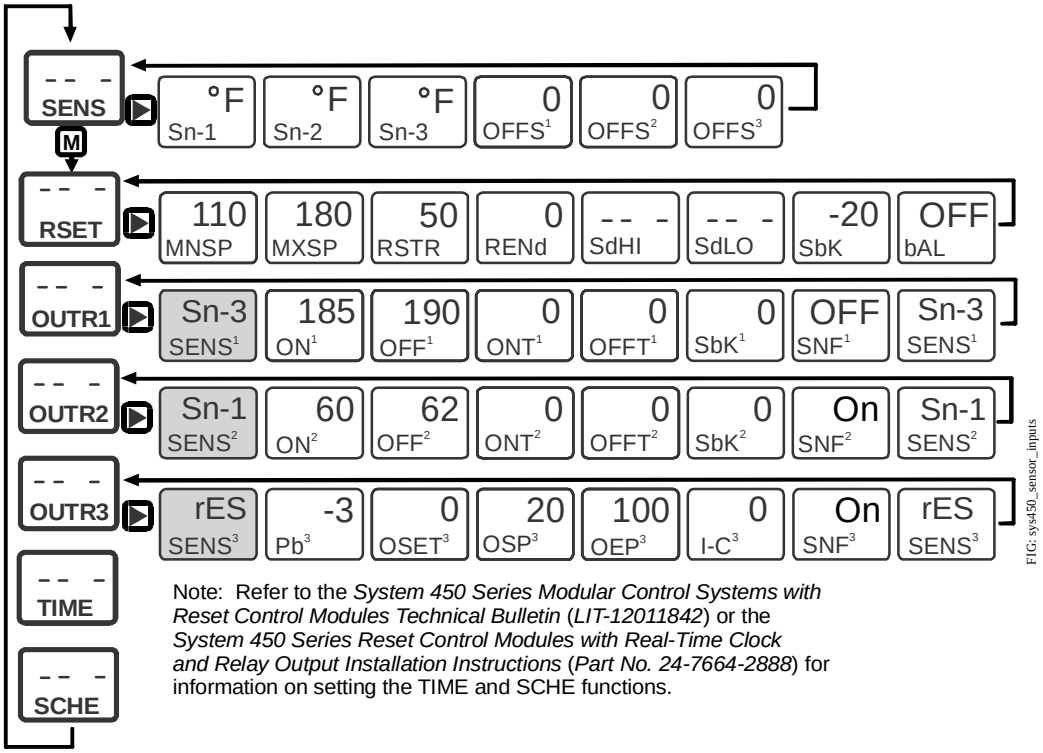

Note: Refer to the *System 450 Series Modular Control Systems with Reset Control Modules Technical Bulletin* (*LIT-12011842*) or the *System 450 Series Reset Control Modules with Real-Time Clock and Relay Output Installation Instructions* (*Part No. 24-7664-2888*) for information on setting the TIME and SCHE functions.

Note: The Sensor Selection screens (in gray) only appear when you first set up each output. After you have selected a sensor for an output, the Sensor Selection screen only appears at the end of the Output Setup screens. If you need to select a different sensor for an output, navigate to the Sensor Edit screen at the end of the Output Setup screens, change the selected sensor, press the right arrow key, and enter the new values for the output.

Hot Water Supply Loop Reset Setup Example

The performance specifications are nominal and conform to acceptable industry standards. For applications at conditions beyond these specifications, consult the local Johnson Controls office. Johnson Controls, Inc. shall not be liable for damages resulting from misapplication or misuse of its products. © 2015 Johnson Controls, Inc. **www.johnsoncontrols.com**

Hot Water Supply Loop Reset (Continued)

The following diagram illustrates how the reset setpoint (RSP) is determined during occupied mode. The model is based on outdoor air temperature (OAT). In this example, OAT = 23°F and RSP = 148°F.

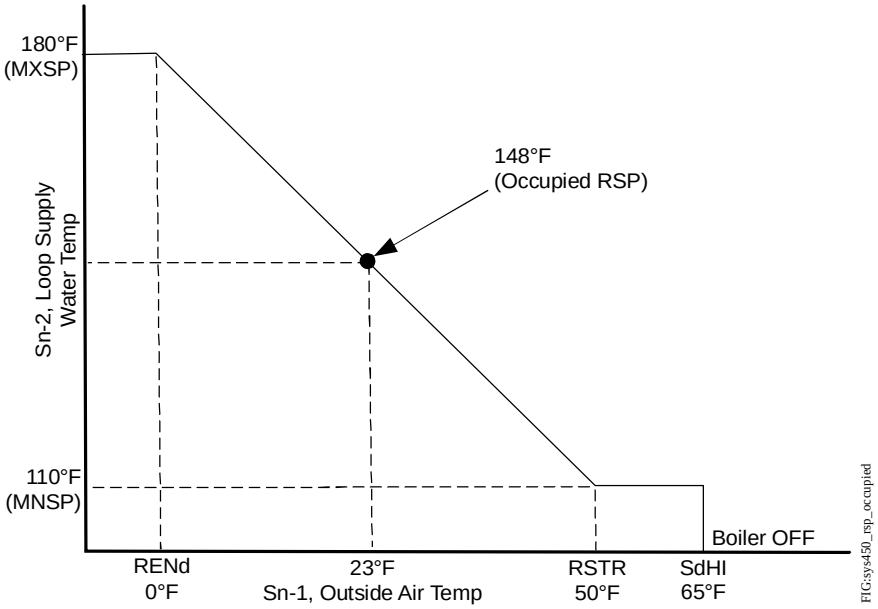

Calculated Reset Setpoint (RSP) for Loop Supply Water Temperature During Occupied Mode

The following diagram illustrates how the RSP is determined during unoccupied mode. The model is also based on OAT, but in this example, OAT = 23°F and RSP = 128°F.

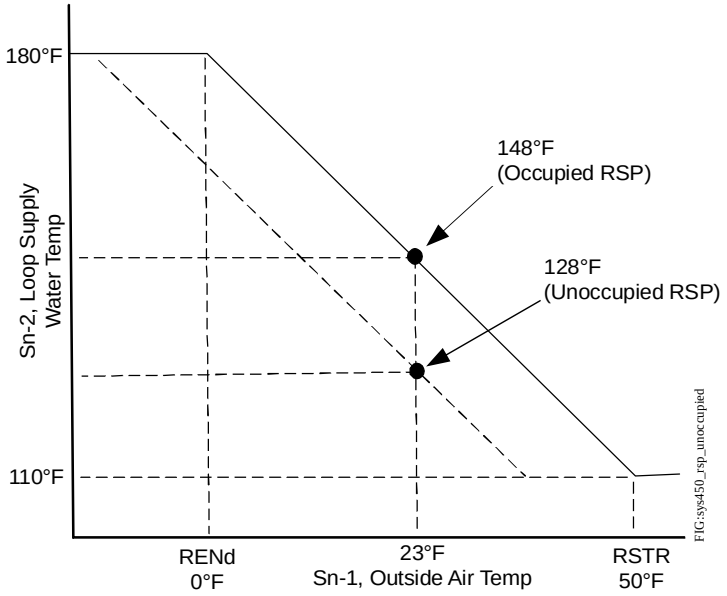

Calculated RSP for Loop Supply Water Temperature During Unoccupied Mode

The performance specifications are nominal and conform to acceptable industry standards. For applications at conditions beyond these specifications, consult the local Johnson Controls office. Johnson Controls, Inc. shall not be liable for damages resulting from misapplication or misuse of its products. © 2015 Johnson Controls, Inc.

Hot Water Supply Loop Reset (Continued)

When the loop hot water supply temperature at Sn-2 falls below the calculated RSP (148°F in this example), then the mixing valve, which was recirculating 20% return water, begins to mix in more boiler water.

When the loop supply temperature at Sn-2 reaches RSP -3F° (145°F in this example), then the mixing valve circulates 100% boiler water.

In this example, the normal control point is between 145°F and 148°F in OCC mode.

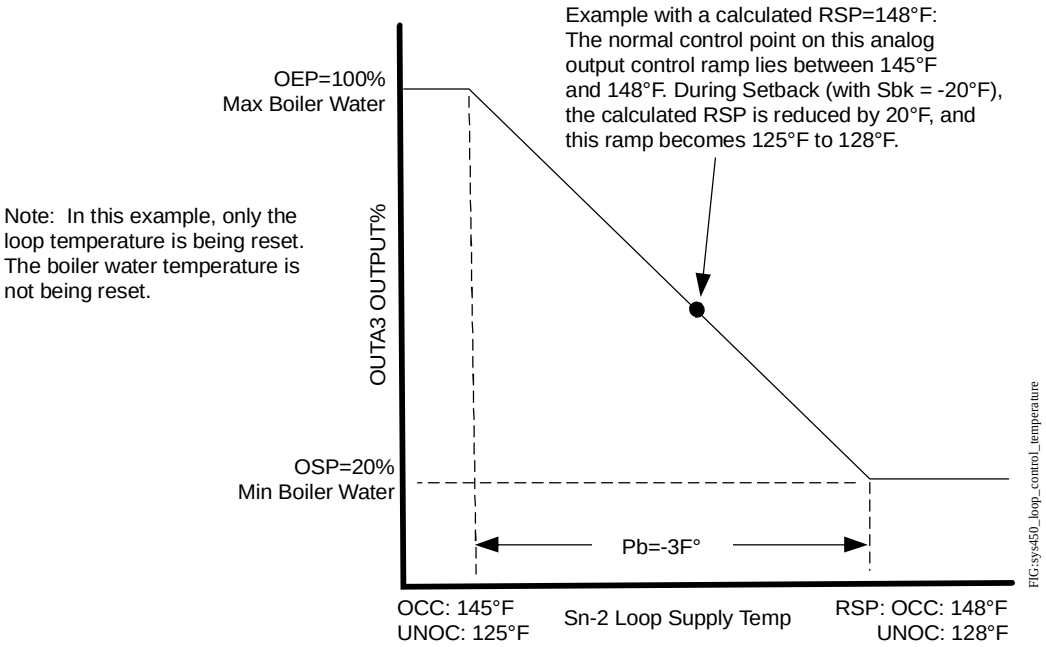

Control of Hot Water Supply to the Calculated RSP Temperature Using a Mixing Valve

The performance specifications are nominal and conform to acceptable industry standards. For applications at conditions beyond these specifications, consult the local Johnson Controls office. Johnson Controls, Inc. shall not be liable for damages resulting from misapplication or misuse of its products. © 2015 Johnson Controls, Inc.

Chilled Water Supply Loop Reset Using an Actuated Mixing Valve

IMPORTANT: Use this System 450™ modular control assembly only as an operating control. Where failure or malfunction of the System 450 modular control assembly could lead to personal injury or property damage to the controlled equipment or other property, additional precautions must be designed into the control system. Incorporate and maintain other devices, such as supervisory or alarm systems or safety or limit controls, intended to warn of or protect against failure or malfunction of the System 450 modular control assembly.

Refer to the *System 450 Series Modular Control Systems with Reset Control Modules (LIT-12011842)*, the *System 450 Series Modular Controls Product Bulletin (LIT-12011458)*, and the installation instructions for product specifications, detailed installation procedures, and important product safety information.

A chilled water reset application saves energy and provides tight temperature control by raising or lowering the loop water supply temperature based on a proportionate drop in outdoor air temperature. The following diagram illustrates how to set up the chiller, sensors, and mixing valve. Information on the following pages illustrates how to wire the System 450 control modules and how to enter the appropriate values in the Sensor Setup screens.

Note: In this example, the chiller water temperature is not being reset. Only the cooling supply water loop temperature is being reset using the mixing valve.

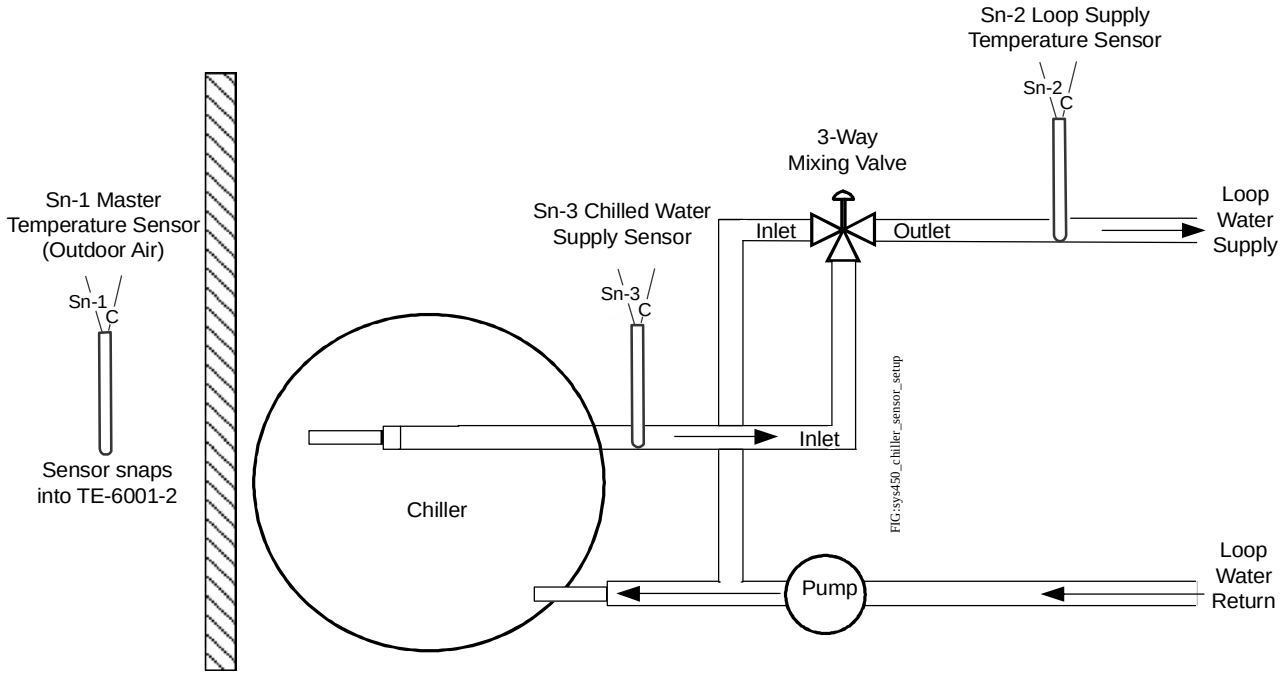

Chiller, Sensor, and Mixing Valve Setup

The performance specifications are nominal and conform to acceptable industry standards. For applications at conditions beyond these specifications, consult the local Johnson Controls office. Johnson Controls, Inc. shall not be liable for damages resulting from misapplication or misuse of its products. © 2015 Johnson Controls, Inc. **www.johnsoncontrols.com**

Chilled Water Supply Loop Reset Using an Actuated Mixing Valve (Continued)

The following diagram illustrates how to wire the control modules for a chilled water supply reset application.

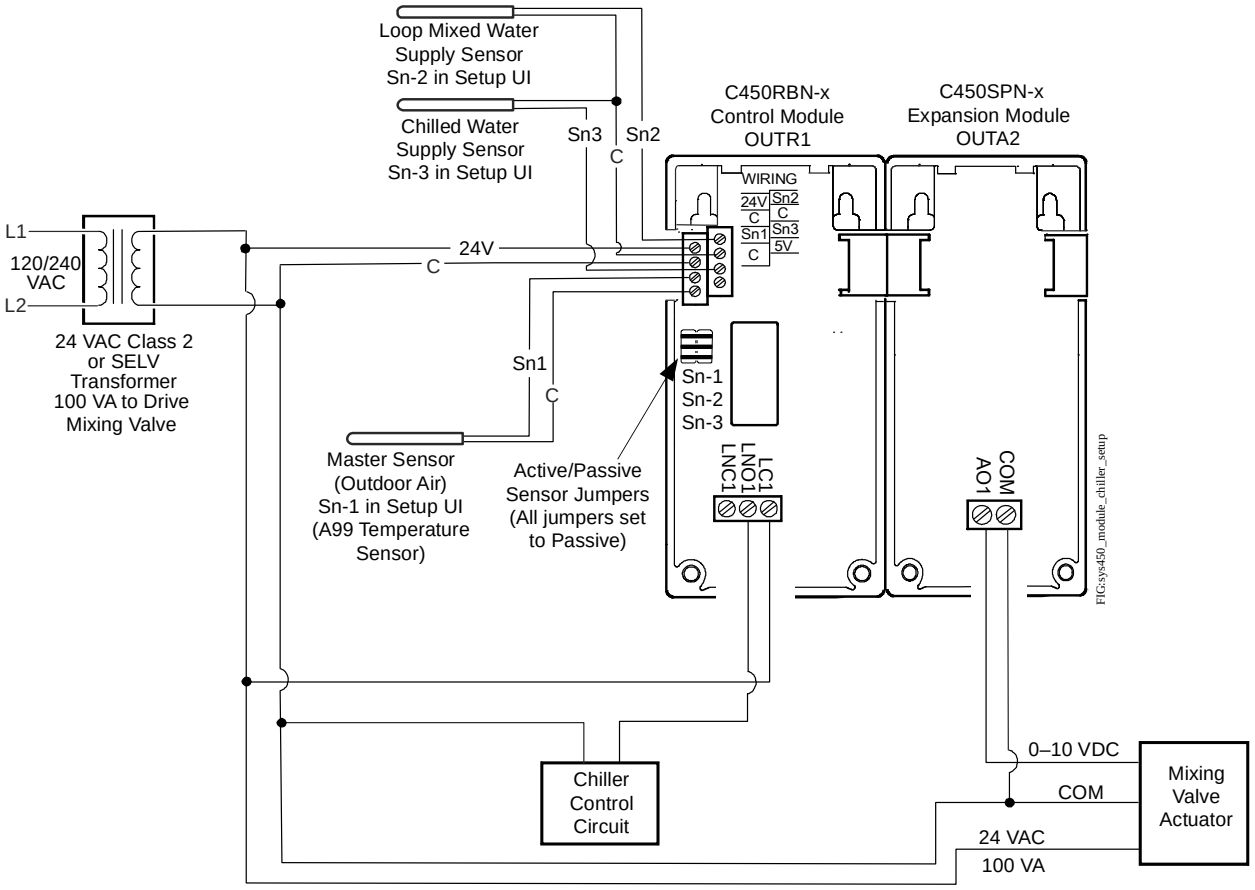

Chilled Water Supply Reset Wiring Using a C450RBN-x Reset Control Module, a C450SPN-x Expansion Module, and an External Power Supply

The performance specifications are nominal and conform to acceptable industry standards. For applications at conditions beyond these specifications, consult the local Johnson Controls office. Johnson Controls, Inc. shall not be liable for damages resulting from misapplication or misuse of its products. © 2015 Johnson Controls, Inc.

Chilled Water Supply Loop Reset Using an Actuated Mixing Valve (Continued)

With the control modules wired, select Sn-3 for OUTR1 to control the chiller compressor. To regulate the supply loop temperature based on a reset setpoint, use a mixing valve, along with the analog output of the C450SPN-x Expansion Module, and select rES as the sensor for OUTA2.

The diagrams on the following pages illustrate how the values for these inputs are calculated.

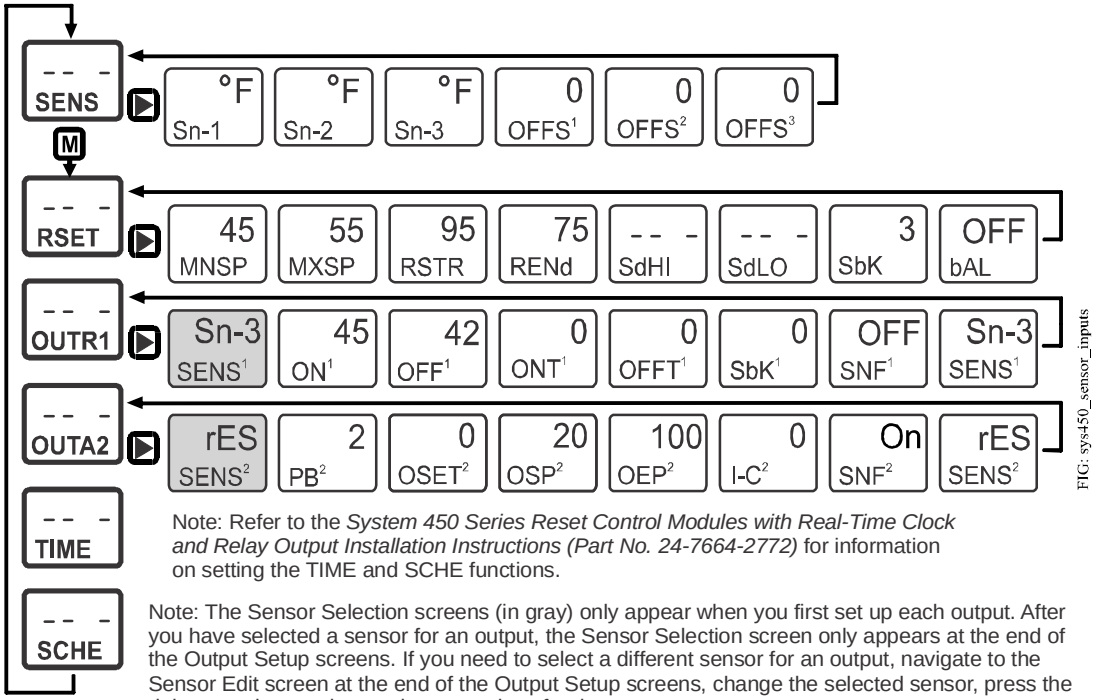

FIG: sys450_sensor_inputs

Note: Refer to the *System 450 Series Reset Control Modules with Real-Time Clock and Relay Output Installation Instructions (Part No. 24-7664-2772)* for information on setting the TIME and SCHE functions.

Note: The Sensor Selection screens (in gray) only appear when you first set up each output. After you have selected a sensor for an output, the Sensor Selection screen only appears at the end of the Output Setup screens. If you need to select a different sensor for an output, navigate to the Sensor Edit screen at the end of the Output Setup screens, change the selected sensor, press the right arrow key, and enter the new values for the output.

UI Screens for the Chilled Water Supply Reset Wiring Setup Example

The performance specifications are nominal and conform to acceptable industry standards. For applications at conditions beyond these specifications, consult the local Johnson Controls office. Johnson Controls, Inc. shall not be liable for damages resulting from misapplication or misuse of its products. © 2015 Johnson Controls, Inc.

Chilled Water Supply Loop Reset Using an Actuated Mixing Valve (Continued)

The following diagram illustrates how the Reset Setpoint (RSP) is determined during occupied mode. The model is based on Outdoor Air Temperature (OAT). In this example, OAT = 85°F and RSP = 50°F.

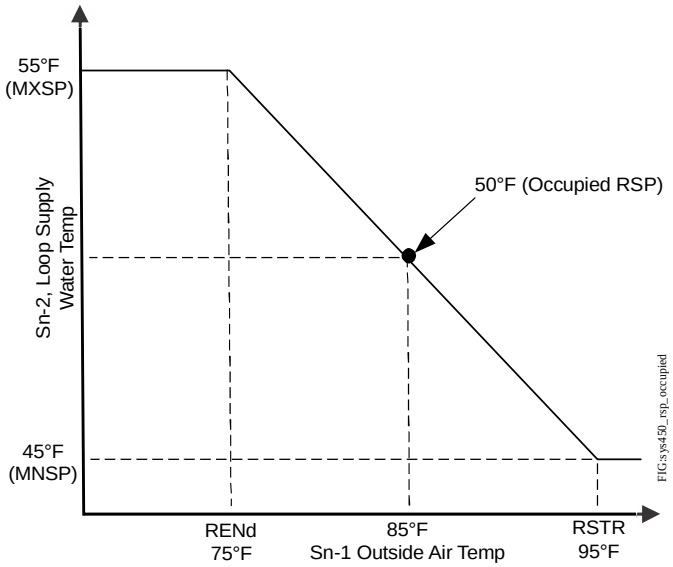

Calculated Reset Setpoint (RSP) for Loop Supply Water Temperature during Occupied Mode

The following diagram illustrates how the RSP is determined during unoccupied mode. The model is also based on OAT, but in this example, OAT = 85°F and RSP = 53°F.

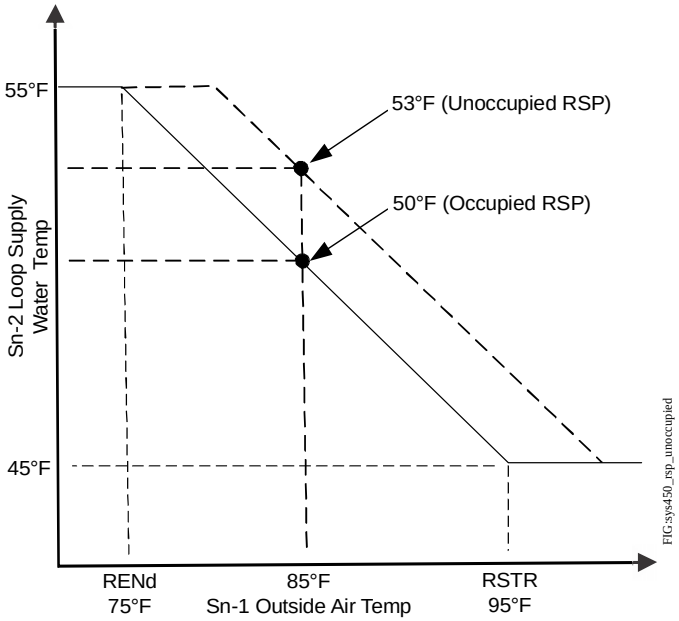

Calculated RSP for Loop Supply Water Temperature during Unoccupied Mode

The performance specifications are nominal and conform to acceptable industry standards. For applications at conditions beyond these specifications, consult the local Johnson Controls office. Johnson Controls, Inc. shall not be liable for damages resulting from misapplication or misuse of its products. © 2015 Johnson Controls, Inc. **www.johnsoncontrols.com**

Chilled Water Supply Loop Reset Using an Actuated Mixing Valve (Continued)

When the loop chilled water supply temperature at Sn-2 increases above the RSP (50°F in this example), then the mixing valve, which was recirculating 20% return water, begins to mix in more chilled water.

When the loop supply temperature at Sn-2 reaches RSP +2F° (52°F in this example), then the mixing valve circulates 100% chilled water.

In this example, the normal control point is between 50°F and 52°F in OCC mode.

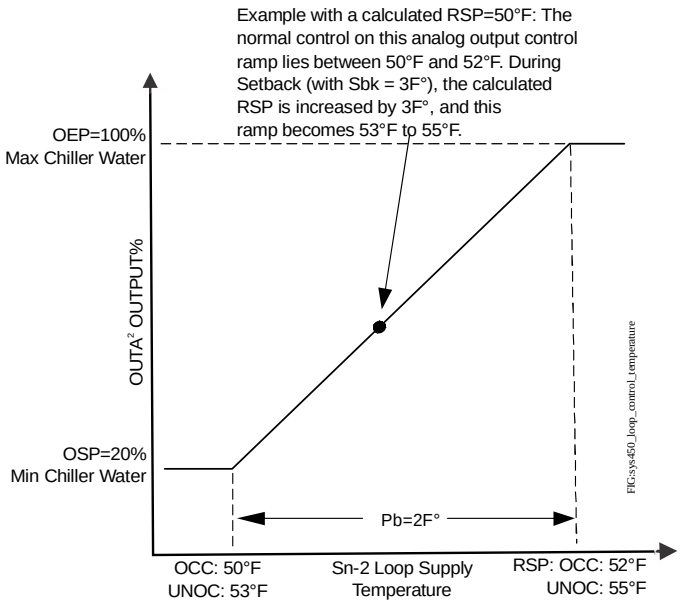

Control of Chilled Water Supply to the Calculated RSP Temperature Using a Mixing Valve

The performance specifications are nominal and conform to acceptable industry standards. For applications at conditions beyond these specifications, consult the local Johnson Controls office. Johnson Controls, Inc. shall not be liable for damages resulting from misapplication or misuse of its products. © 2015 Johnson Controls, Inc. **www.johnsoncontrols.com**

Controlling Head Pressure on a Two-Circuit Condenser with High Input Signal Select

IMPORTANT: Use the System 450™ control module only as an operating control. Where failure or malfunction of the System 450 control module could lead to personal injury or property damage to the controlled equipment or other property, additional precautions must be designed into the control system. Incorporate and maintain other devices, such as supervisory or alarm systems or safety or limit controls, intended to warn of or protect against failure or malfunction of the System 450 control module.

Refer to the *System 450 Series Modular Control Systems with Communications Control Modules (LIT-12011826)*, the *System 450 Series Modular Controls Product Bulletin (LIT-12011458)*, and the installation instructions for product specifications, detailed installation procedures, and important product safety information.

When a cooling system has a two-circuit condenser with a single cooling fan, it is necessary to control the fan based on the condenser circuit with the highest pressure. The C450CEN-x Control Module is capable of performing this function using the high input signal select feature.

You must use identical sensors connected to Sn1 and Sn2 to enable the high input signal select feature (HI-2). Install two identical P499 Electronic Pressure Transducers on the high side of each circuit, and wire them as shown in the wiring diagram. The liquid line on the outlet side of the condensers is the recommended mounting location. The C450CEN-x Control Module can perform high input signal select using up to three inputs, but this example only uses two inputs. Use the C450SPN-x Expansion Module in the place of the C450SQN-x Expansion Module if you do not need a spare output.

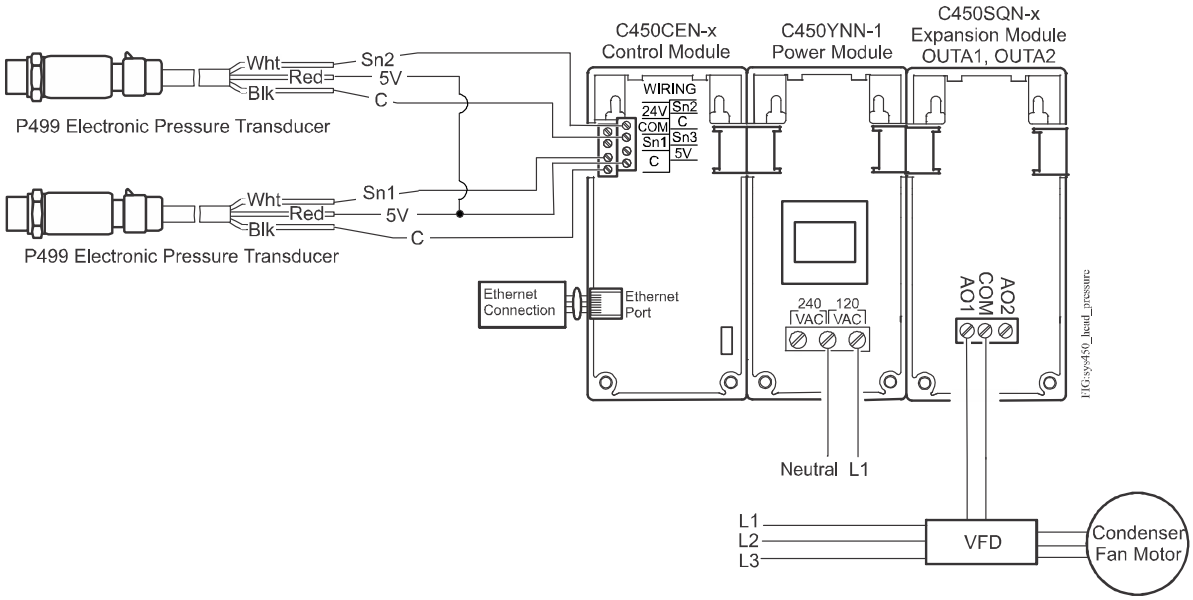

C450CEN-x Control Module Controlling Head Pressure on a Multi-Circuit Condenser with a Single Fan Using High Input Signal Select

The performance specifications are nominal and conform to acceptable industry standards. For applications at conditions beyond these specifications, consult the local Johnson Controls office. Johnson Controls, Inc. shall not be liable for damages resulting from misapplication or misuse of its products. © 2015 Johnson Controls, Inc. **www.johnsoncontrols.com**

Controlling Head Pressure on a Two-Circuit Condenser with High Input Signal Select (Continued)

The High Input Signal Select 2 (HI-2) functional sensor is selected in this application example. When the sensors connected to Sn1 and Sn2 are the same sensor types, the HI-2 sensor is enabled for selection. When you select the HI-2 sensor for an output, the output is controlled by the sensor (Sn-1 or Sn-2) that is sensing the higher value of the two inputs.

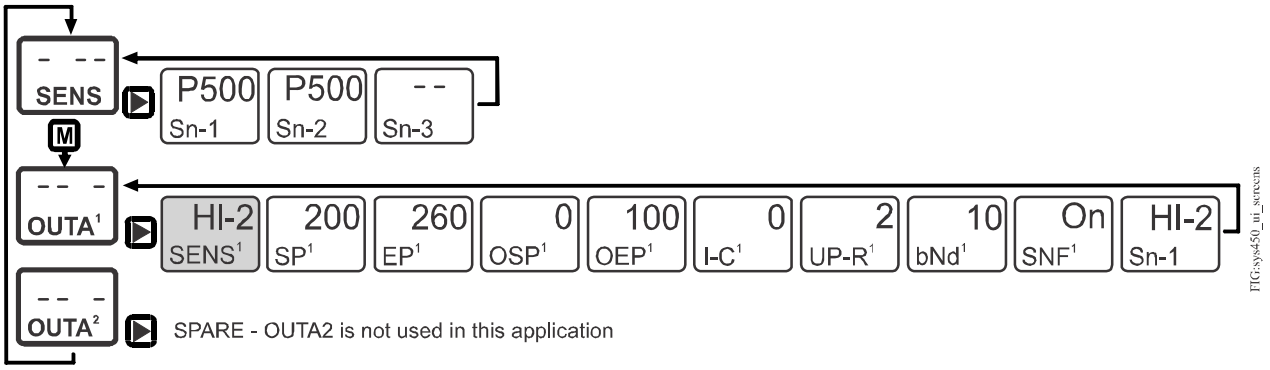

Note: The Sensor Selection screens (in gray) only appear when you first set up each output. After you have selected a sensor for an output, the Sensor Selection screen only appears at the end of the Output Setup screens. If you need to select a different sensor for a output, navigate to the Sensor Edit screen at the end of the Output Setup screens, change the selected sensor, press the right arrow key, and enter the new values for the output.

Status and UI Setup Screens for the C450CEN-x Control Module Controlling Head Pressure on a Multi-Circuit Condenser with a Single Fan Using High Output Signal Select Example

The following screen captures show the web user interface on the C450CEN-x Control Module.

Note: The System 450 web UI screens and values shown are for the application example illustrated on the previous page. The screens and values for your application may vary depending the sensors connected and the desired setpoints.

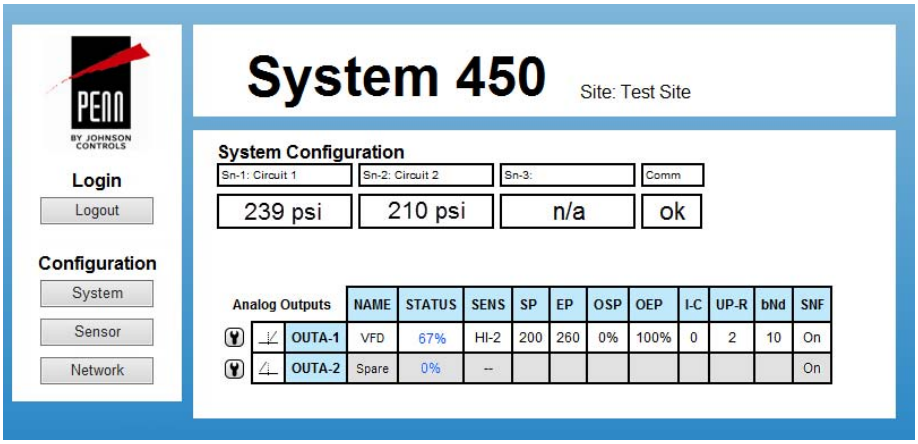

System Configuration Screen

The performance specifications are nominal and conform to acceptable industry standards. For applications at conditions beyond these specifications, consult the local Johnson Controls office. Johnson Controls, Inc. shall not be liable for damages resulting from misapplication or misuse of its products. © 2015 Johnson Controls, Inc.

Controlling Head Pressure on a Two-Circuit Condenser with High Input Signal Select (Continued)

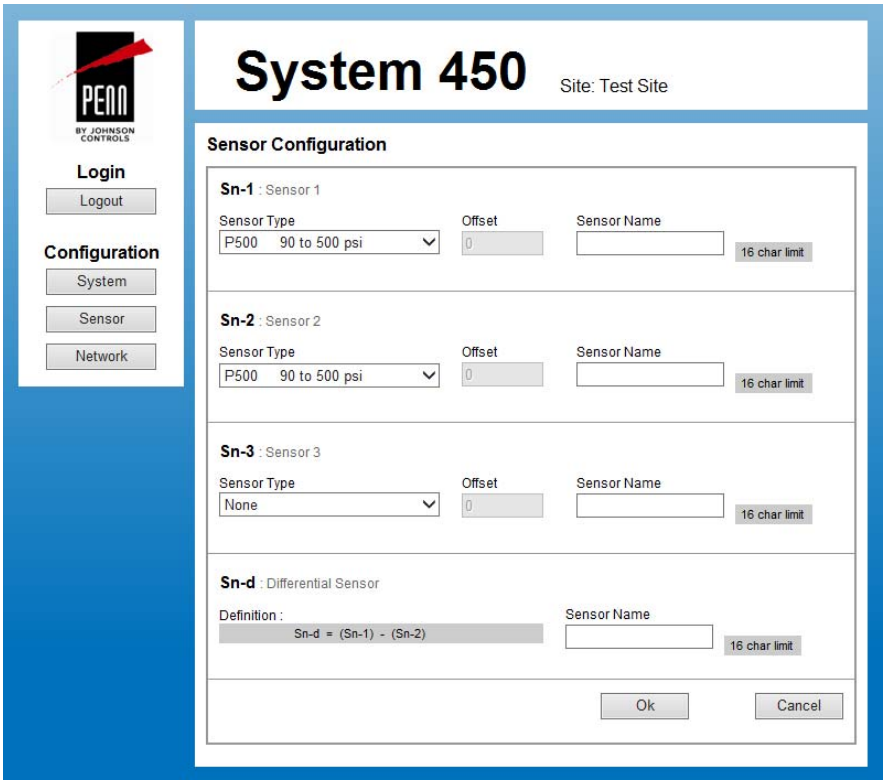

Sensor Configuration Screen

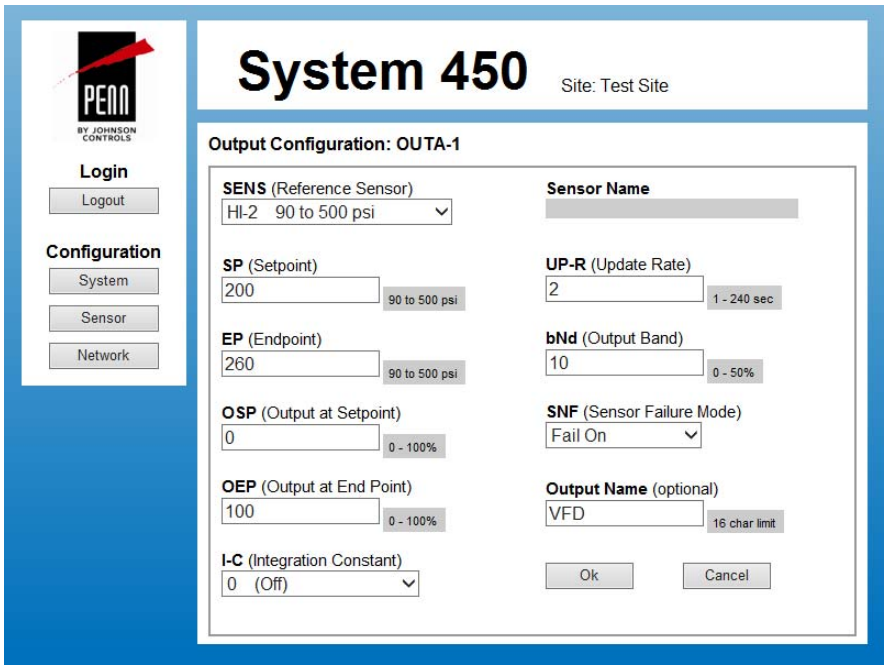

Output Configuration Screen for OUTA1

Note: Refer to the *System 450 Series Control Modules with Communications Technical Bulletin (LIT-12011826)* for information on setting up the network parameters for your Ethernet network.

The performance specifications are nominal and conform to acceptable industry standards. For applications at conditions beyond these specifications, consult the local Johnson Controls office. Johnson Controls, Inc. shall not be liable for damages resulting from misapplication or misuse of its products. © 2015 Johnson Controls, Inc. **www.johnsoncontrols.com**

Small Refrigeration Rack Controller with Communications

IMPORTANT: Use the System 450™ control module only as an operating control. Where failure or malfunction of the System 450 control module could lead to personal injury or property damage to the controlled equipment or other property, additional precautions must be designed into the control system. Incorporate and maintain other devices, such as supervisory or alarm systems or safety or limit controls, intended to warn of or protect against failure or malfunction of the System 450 control module.

Refer to the *System 450 Series Modular Control Systems with Communications Control Modules (LIT-12011826)*, the *System 450 Series Modular Controls Product Bulletin (LIT-12011458)*, and the installation instructions for product specifications, detailed installation procedures, and important product safety information.

In this example, the C450CEN-x Control Module controls a small refrigeration rack with two suction groups: a low temperature group and a medium temperature group. The C450CEN-x Control Module, using a variable frequency drive, controls the head pressure and the condenser fan speed. You can set up your System 450 control system or edit the system's set up values via either the LCD and four-button (local) UI on the control module or the web (remote) UI on your computer using an Ethernet connection to the control module.

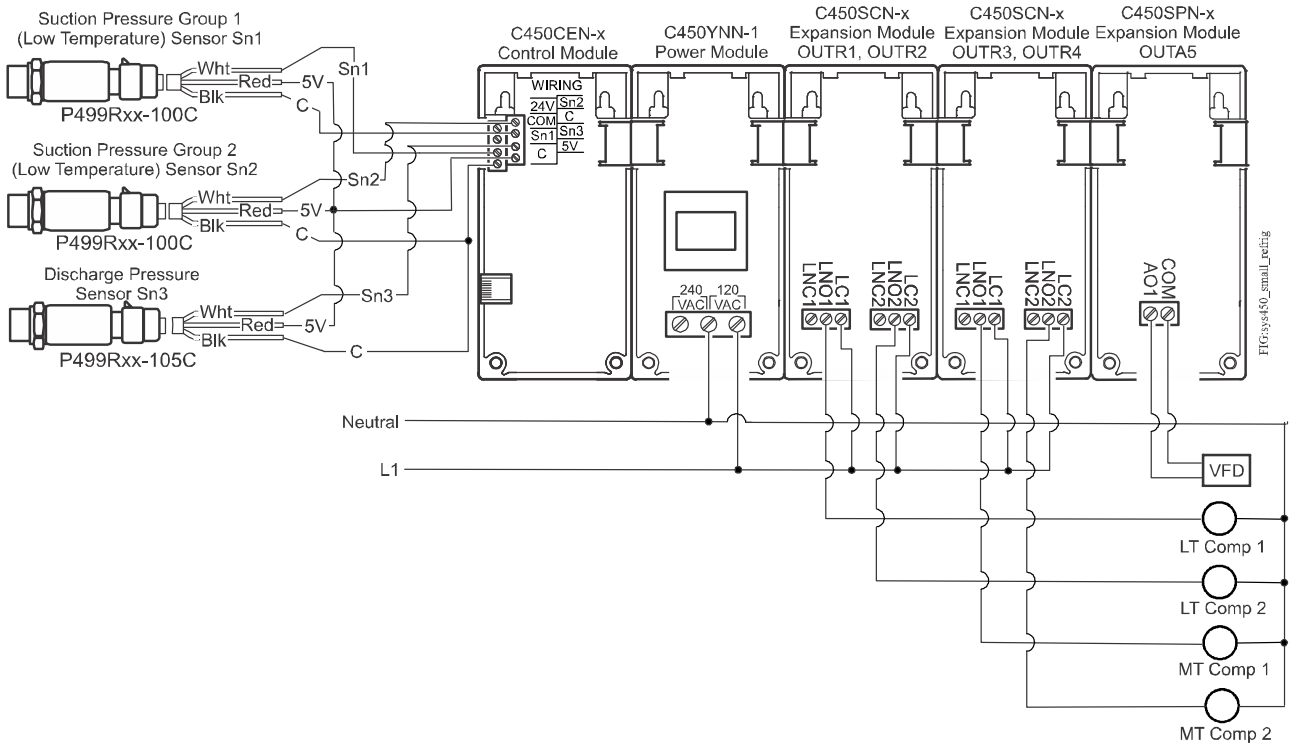

C450CEN-x Control Module Controlling a Small Refrigeration Rack with Two Suction Groups

The performance specifications are nominal and conform to acceptable industry standards. For applications at conditions beyond these specifications, consult the local Johnson Controls office. Johnson Controls, Inc. shall not be liable for damages resulting from misapplication or misuse of its products. © 2015 Johnson Controls, Inc. **www.johnsoncontrols.com**

Small Refrigeration Rack Controller with Communications (Continued)

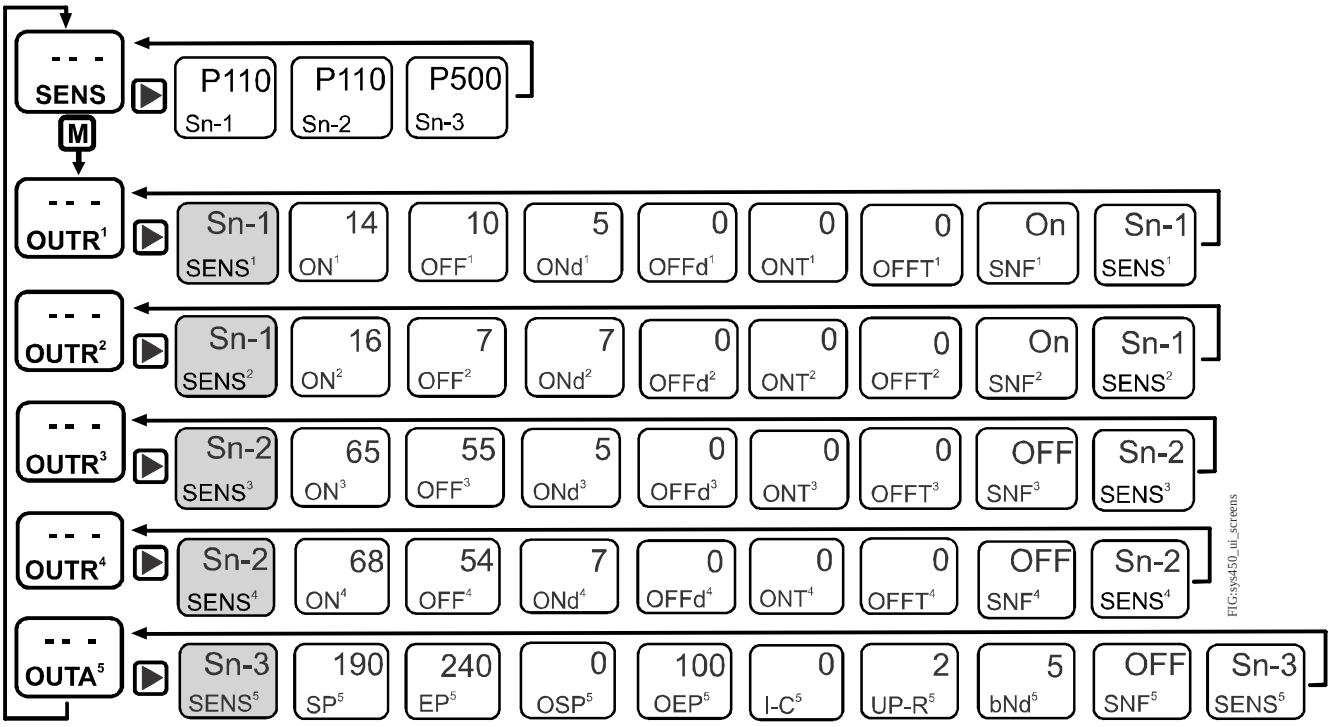

Note: The Sensor Selection screens (in gray) only appear when you first set up each output. After you have selected a sensor for an output, the Sensor Selection screen only appears at the end of the Output Setup screens. If you need to select a different sensor for an output, navigate to the Sensor Edit screen at the end of the Output Setup screens, change the selected sensor, press the right arrow key, and enter the new values for the output.

Status and UI Setup Screens for C450CEN-x Control Module Controlling a Small Refrigeration Rack with Two Suction Groups

The screen captures on the following page show the web user interface on the C450CEN-x Control Module.

Note: This example is for illustrative purposes only. Conditions may vary using different applications.

The performance specifications are nominal and conform to acceptable industry standards. For applications at conditions beyond these specifications, consult the local Johnson Controls office. Johnson Controls, Inc. shall not be liable for damages resulting from misapplication or misuse of its products. © 2015 Johnson Controls, Inc.

Small Refrigeration Rack Controller with Communications (Continued)

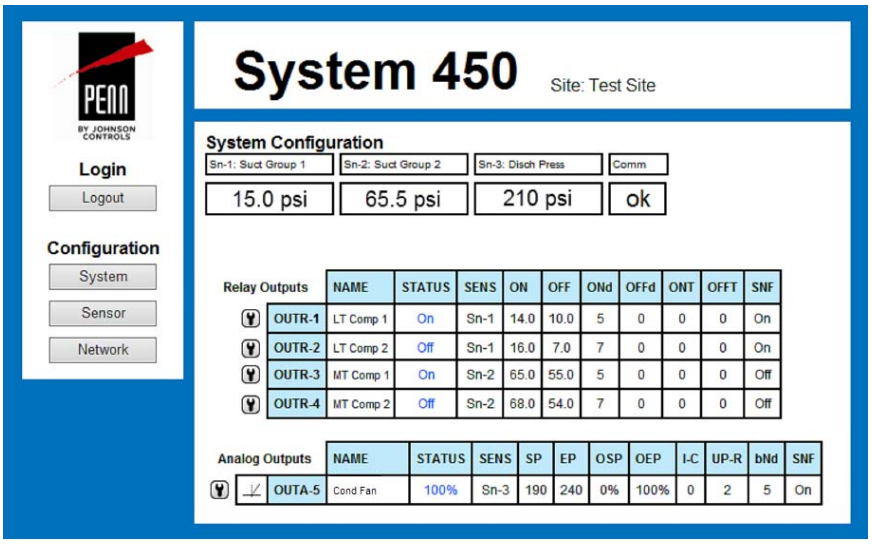

System Overview Screen

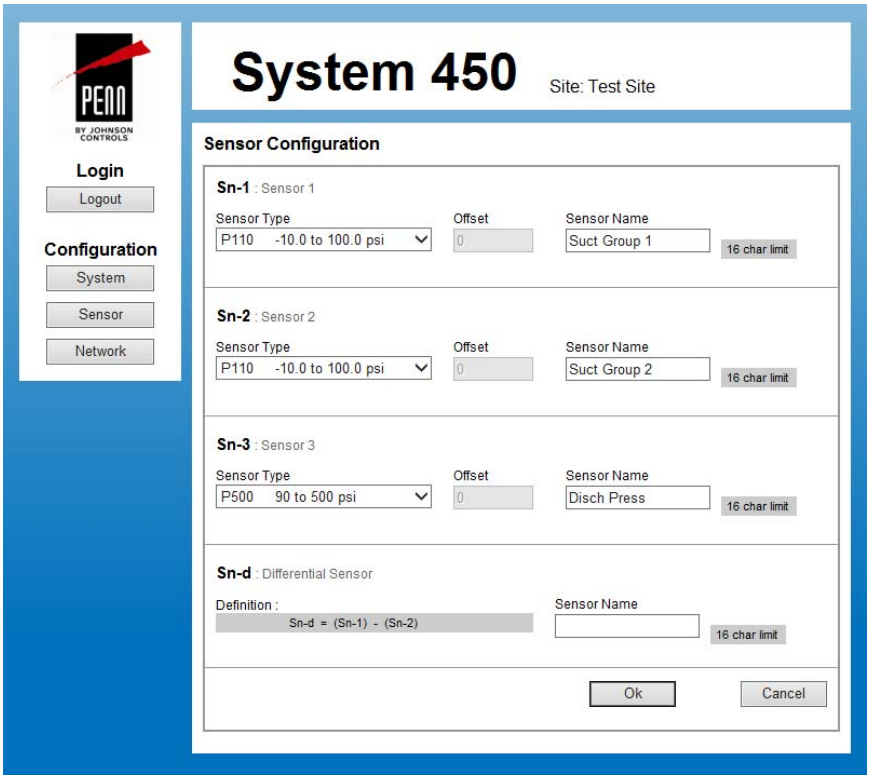

Sensor Configuration Screen

Note: Refer to the *System 450 Series Control Modules with Communications Technical Bulletin (LIT-12011826)* for information on setting up the network parameters for your Ethernet network.

The performance specifications are nominal and conform to acceptable industry standards. For applications at conditions beyond these specifications, consult the local Johnson Controls office. Johnson Controls, Inc. shall not be liable for damages resulting from misapplication or misuse of its products. © 2015 Johnson Controls, Inc.

Ten-Stage Rack Controller with Ethernet Communications

IMPORTANT: Use the System 450™ control module only as an operating control. Where failure or malfunction of the System 450 control module could lead to personal injury or property damage to the controlled equipment or other property, additional precautions must be designed into the control system. Incorporate and maintain other devices, such as supervisory or alarm systems or safety or limit controls, intended to warn of or protect against failure or malfunction of the System 450 control module.

Refer to the *System 450 Series Modular Control Systems with Communications Control Modules (LIT-12011826)*, the *System 450 Series Modular Controls Product Bulletin (LIT-12011458)*, and the installation instructions for product specifications, detailed installation procedures, and important product safety information.

In this example, the C450CEN-x Control Module controls a small refrigeration rack with three suction groups. A low suction pressure group for low temperature cases, medium suction pressure group for medium temperature cases, and high suction pressure group for high temperature cases make up the three suction groups.

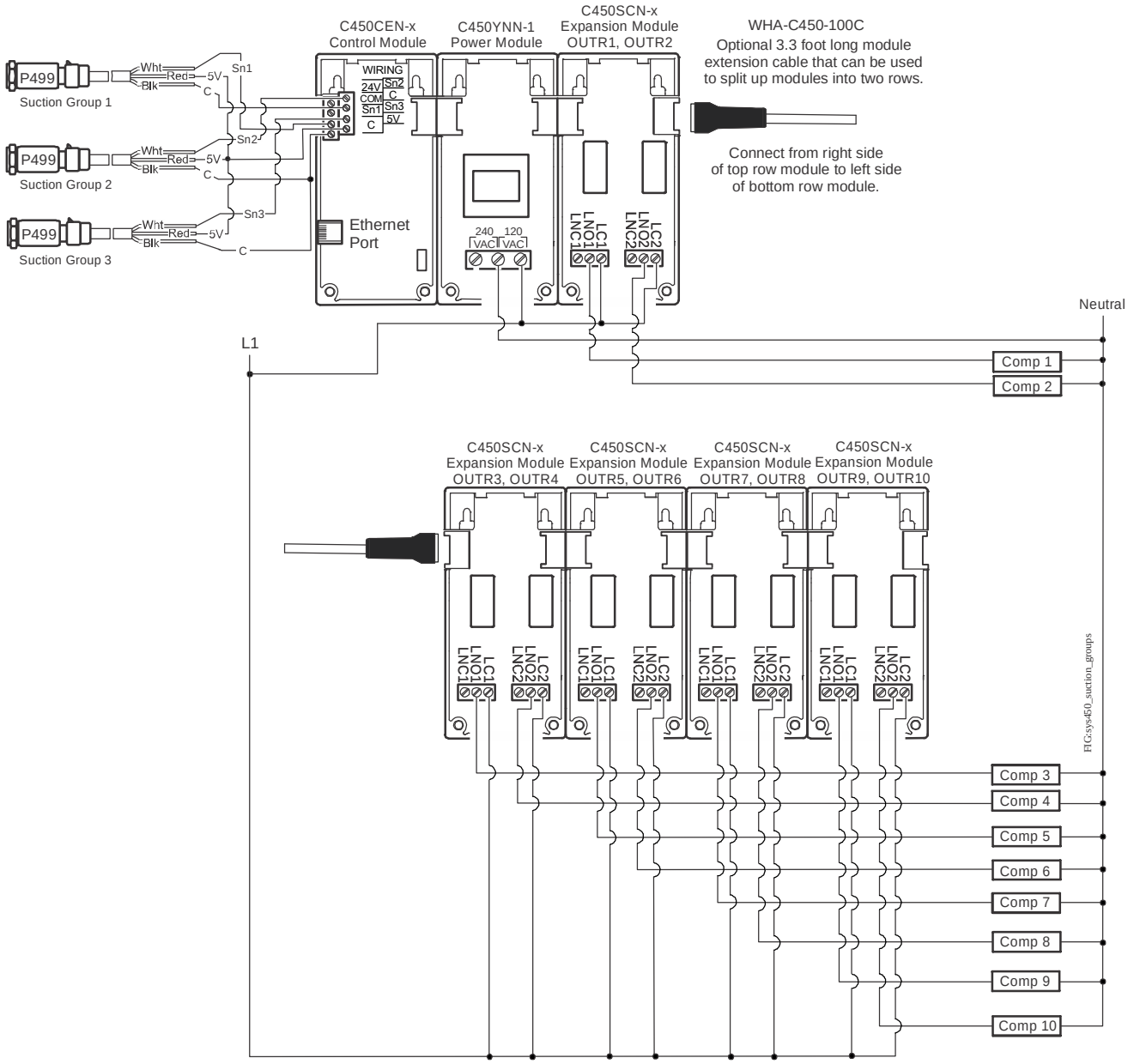

C450CEN-x Control Module Controlling a Ten-Stage Rack Controller with Three Suction Groups

The performance specifications are nominal and conform to acceptable industry standards. For applications at conditions beyond these specifications, consult the local Johnson Controls office. Johnson Controls, Inc. shall not be liable for damages resulting from misapplication or misuse of its products. © 2015 Johnson Controls, Inc. **www.johnsoncontrols.com**

Ten-Stage Rack Controller with Ethernet Communications (Continued)

In this example, compressors one through four are set up for Suction Group 1 (low pressure group for low temperature cases), compressors five through eight are set up for Suction Group 2 (medium pressure suction group for medium temperature cases), and compressors nine and ten are set up for Suction Group 3 (high pressure suction group for high temperature cases).

To better balance the runtime for all compressors in a suction group, pressure differentials (between the on and off values) for each compressor are set so the last compressor on is the last compressor off. The On Delay (ONd) and Off Delay (OFFd) values are used to prevent the compressors from short cycling. In the event of a sensor or sensor wiring failure of an output's selected sensor, the Suction Group 1 outputs switch to on, two of the Suction Group 2 outputs switch to on, the other two outputs switch to off, and the Suction Group 3 outputs switch to off.

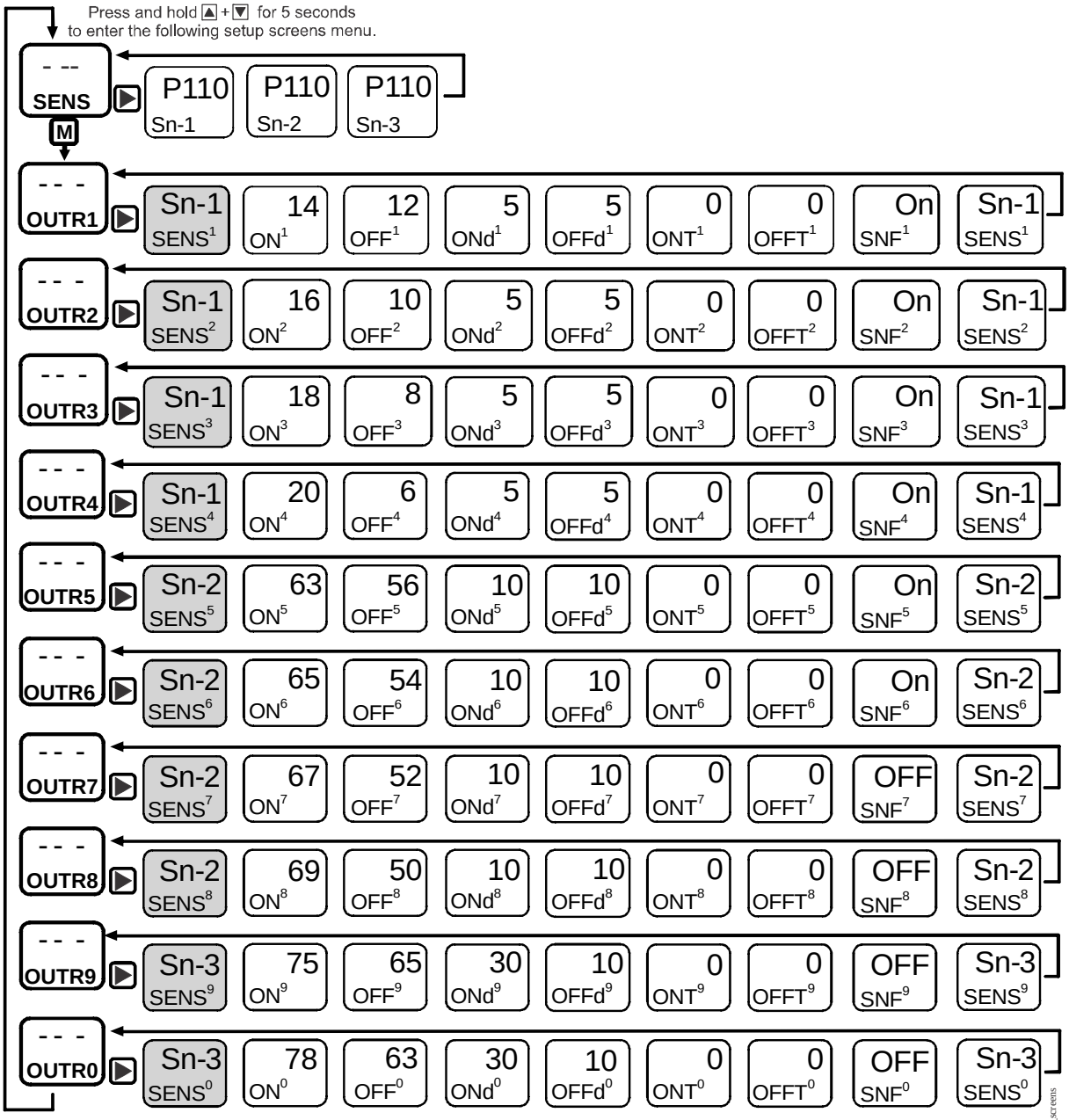

Note: The Sensor Selection screens (in gray) only appear when you first set up each output. After you have selected a sensor for an output, the Sensor Selection screen only appears at the end of the Output Setup screens. If you need to select a different sensor for an output, navigate to the Sensor Edit screen at the end of the Output Setup screens, change the selected sensor, press the right arrow key, and enter the new values for the output.

FIG: sys450_ui_screens

Status and UI Setup Screens for Ten-Stage Rack Controller with Three Suction Groups

The performance specifications are nominal and conform to acceptable industry standards. For applications at conditions beyond these specifications, consult the local Johnson Controls office. Johnson Controls, Inc. shall not be liable for damages resulting from misapplication or misuse of its products. © 2015 Johnson Controls, Inc. **www.johnsoncontrols.com**

Ten-Stage Rack Controller with Ethernet Communications (Continued)

The screen captures on the following pages show the web user interface on the C450CEN-x Control Module.

Note: This example is for illustrative purposes only. Conditions may vary using different applications.

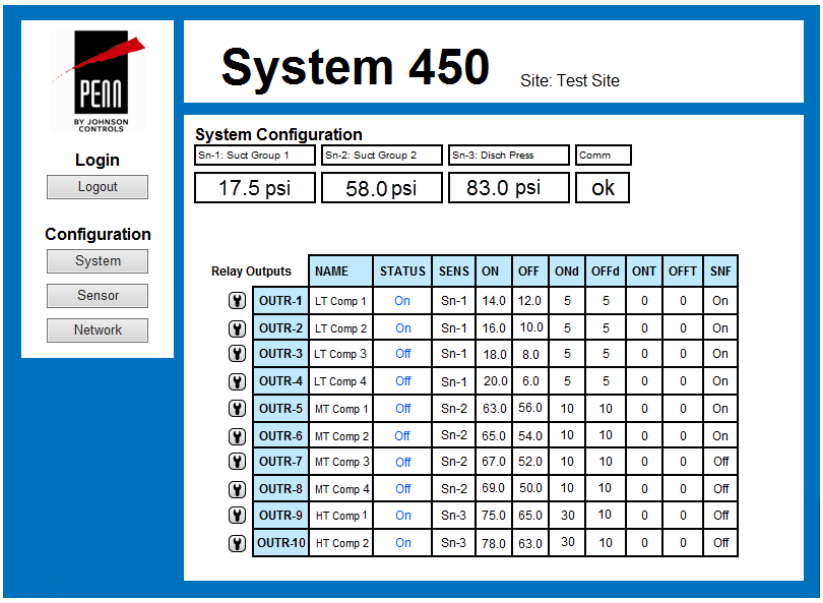

System Configuration Screen

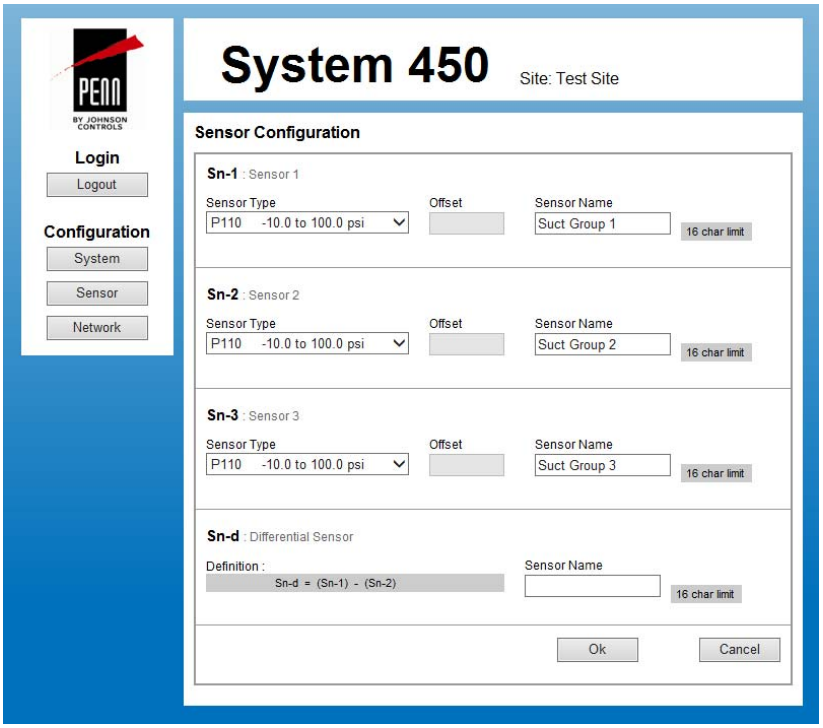

Sensor (Input) Configuration Setup Screen

The performance specifications are nominal and conform to acceptable industry standards. For applications at conditions beyond these specifications, consult the local Johnson Controls office. Johnson Controls, Inc. shall not be liable for damages resulting from misapplication or misuse of its products. © 2015 Johnson Controls, Inc.

Ten-Stage Rack Controller with Ethernet Communications (Continued)

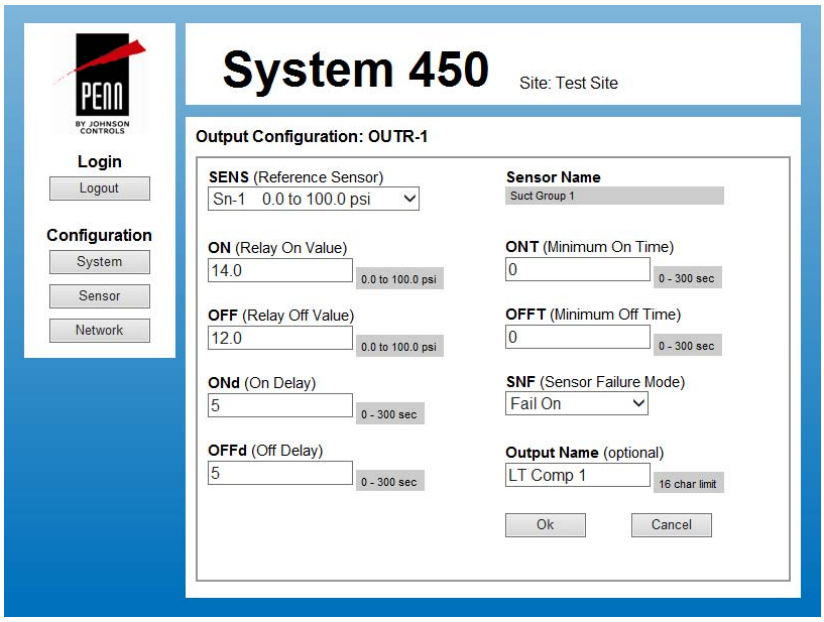

Output Configuration Setup Screen for OUTR1

Note: Refer to the *System 450 Series Control Modules with Communications Technical Bulletin (LIT-12011826)* for information on setting up the network parameters for your Ethernet network.

The performance specifications are nominal and conform to acceptable industry standards. For applications at conditions beyond these specifications, consult the local Johnson Controls office. Johnson Controls, Inc. shall not be liable for damages resulting from misapplication or misuse of its products. © 2015 Johnson Controls, Inc.

Small Refrigeration Rack Controller with Ethernet Communication

IMPORTANT: Use the System 450™ control module only as an operating control. Where failure or malfunction of the System 450 control module could lead to personal injury or property damage to the controlled equipment or other property, additional precautions must be designed into the control system. Incorporate and maintain other devices, such as supervisory or alarm systems or safety or limit controls, intended to warn of or protect against failure or malfunction of the System 450 control module.

Refer to the *System 450 Series Modular Control Systems with Communications Control Modules (LIT-12011826)*, the *System 450 Series Modular Controls Product Bulletin (LIT-12011458)*, and the

System 450 can be used to control a small refrigeration rack with up to three suction groups with a total of ten stages of compression.

In this example, the C450CEN-x Control Module with Ethernet communication controls a small refrigeration rack with two suction groups: a low temperature group and a medium temperature group. The low pressure suction groups has two compressors (Comp 1 and Comp 2). The medium pressure suction has one compressor (Comp 3). This control system also controls the condenser fan motor.

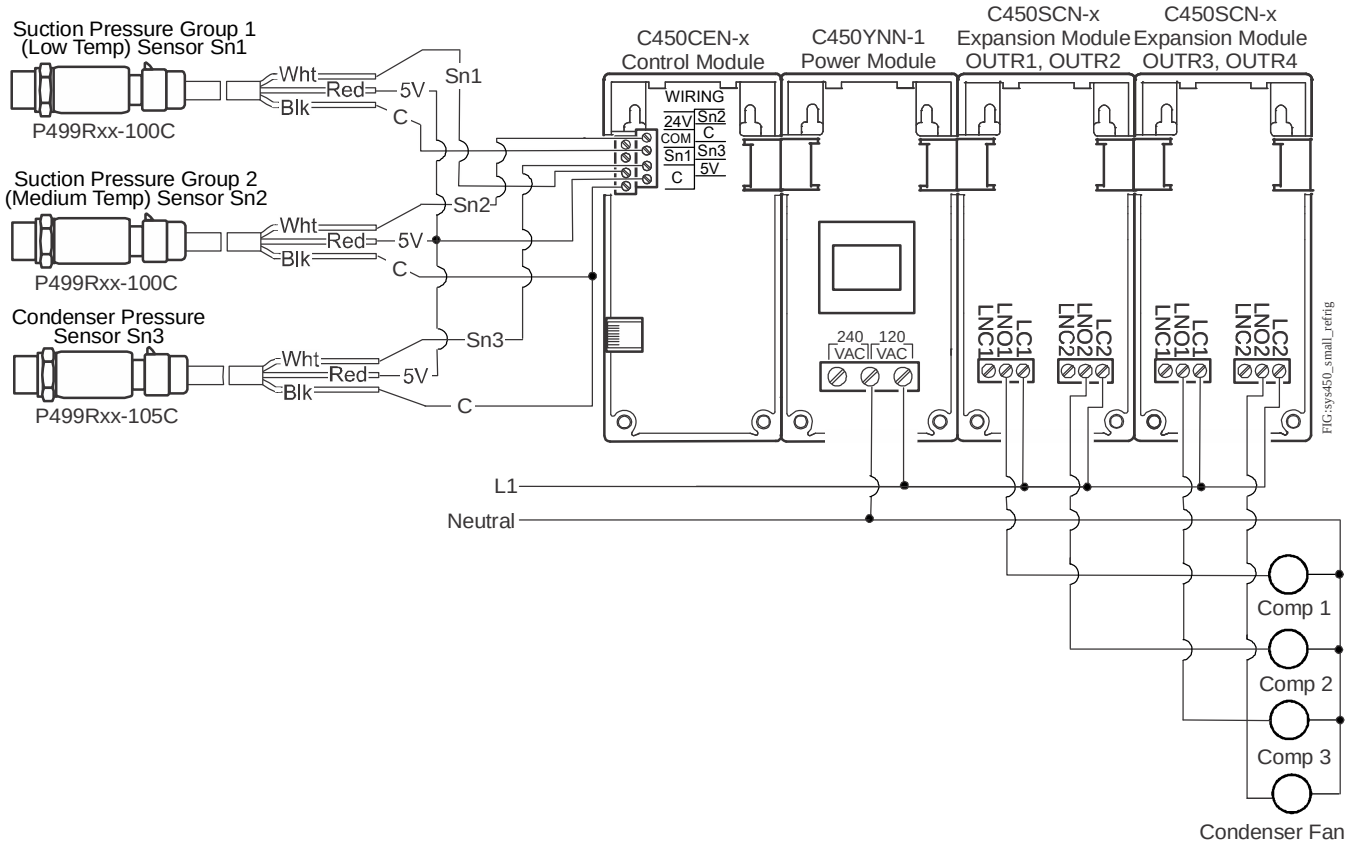

C450CEN-x Control Module with Ethernet Communication Controlling a Small Refrigeration Rack

The performance specifications are nominal and conform to acceptable industry standards. For applications at conditions beyond these specifications, consult the local Johnson Controls office. Johnson Controls, Inc. shall not be liable for damages resulting from misapplication or misuse of its products. © 2015 Johnson Controls, Inc. **www.johnsoncontrols.com**

Small Refrigeration Rack Controller with Ethernet Communication (Continued)

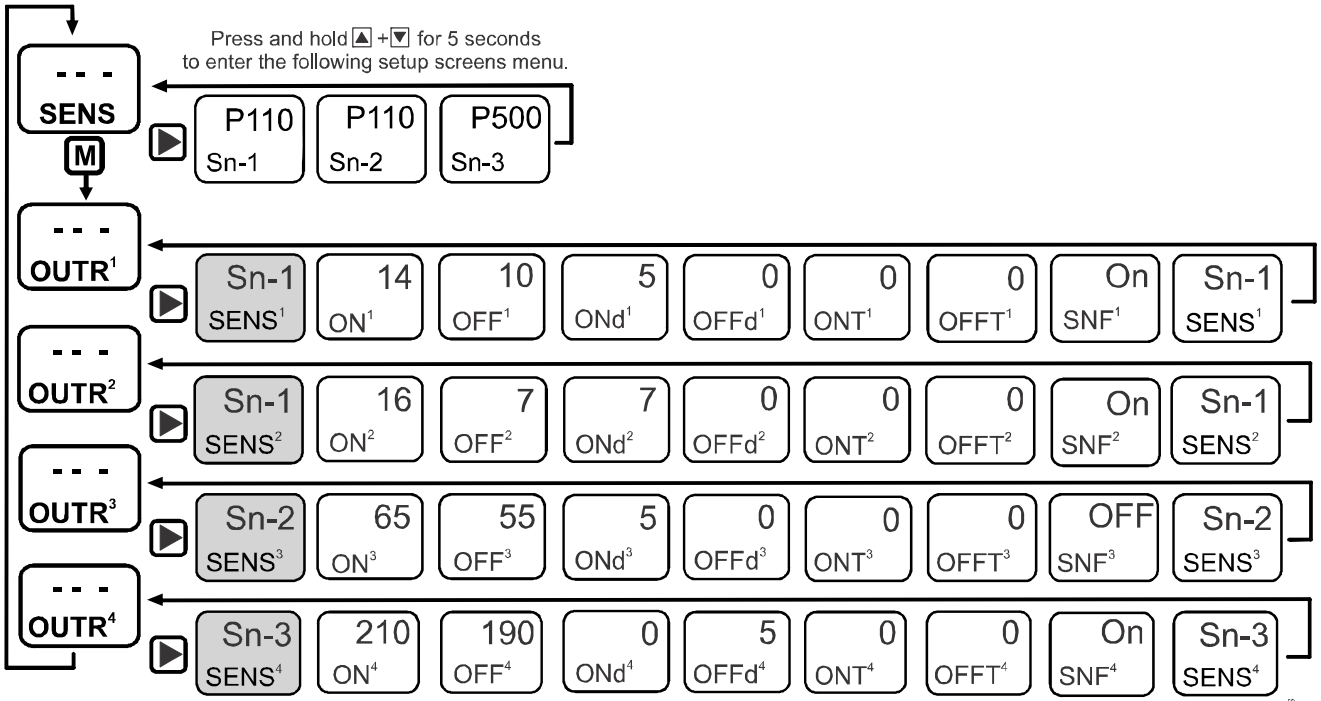

Note: The Sensor Selection screens (in gray) only appear when you first set up each output. After you have selected a sensor for an output, the Sensor Selection screen only appears at the end of the Output Setup screens. If you need to select a different sensor for an output, navigate to the Sensor Edit screen at the end of the Output Setup screens, change the selected sensor, press the right arrow key, and enter the new values for the output.

FIG:sys450_ui_screens

Example Status and UI Setup Screens for the C450CEN-x Control Module with Ethernet Communication Controlling a Small Refrigeration Rack

The screen captures on the following pages show the web user interface on the C450CEN-x Control Module.

This example is for illustrative purposes only. Conditions may vary using different applications.

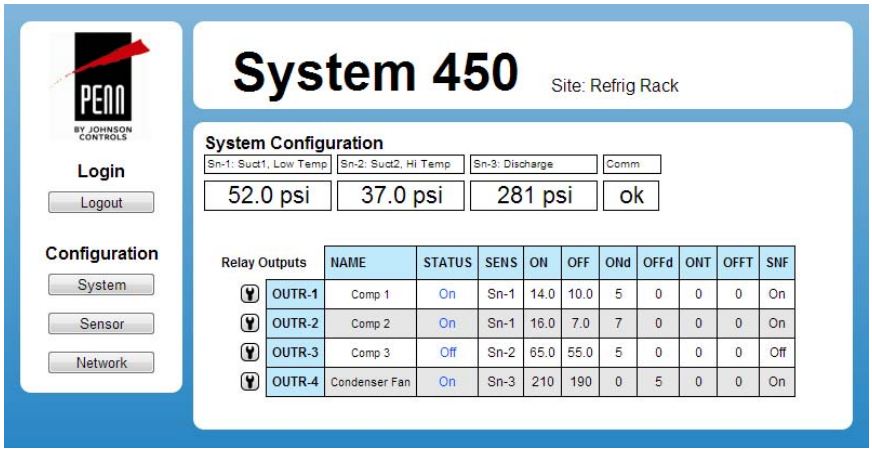

System Configuration Screen

The performance specifications are nominal and conform to acceptable industry standards. For applications at conditions beyond these specifications, consult the local Johnson Controls office. Johnson Controls, Inc. shall not be liable for damages resulting from misapplication or misuse of its products. © 2015 Johnson Controls, Inc.

Small Refrigeration Rack Controller with Ethernet Communication (Continued)

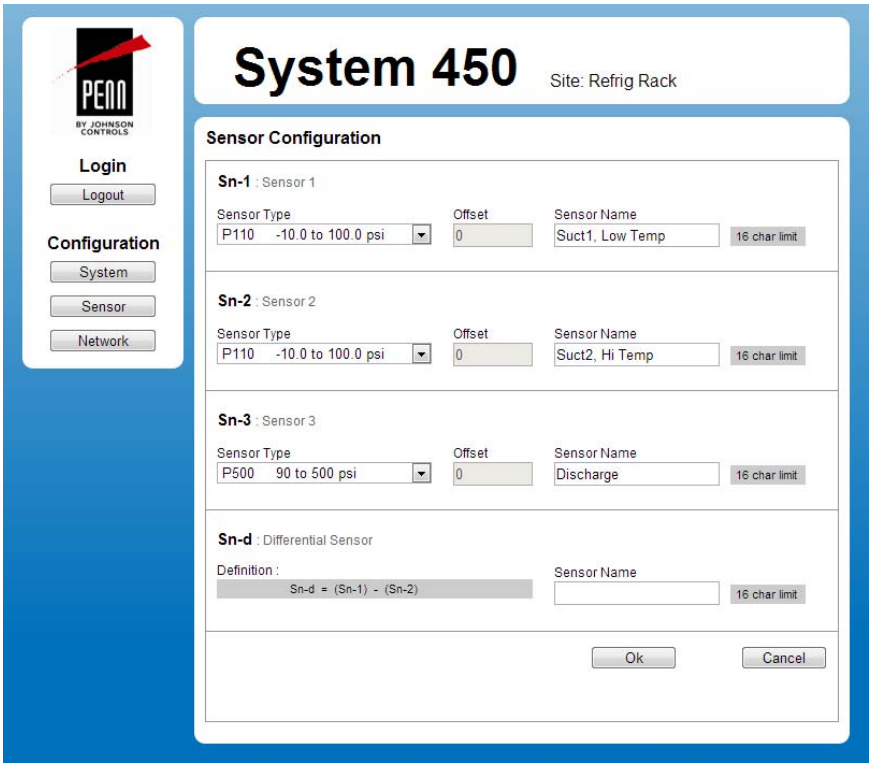

Sensor Configuration Screen

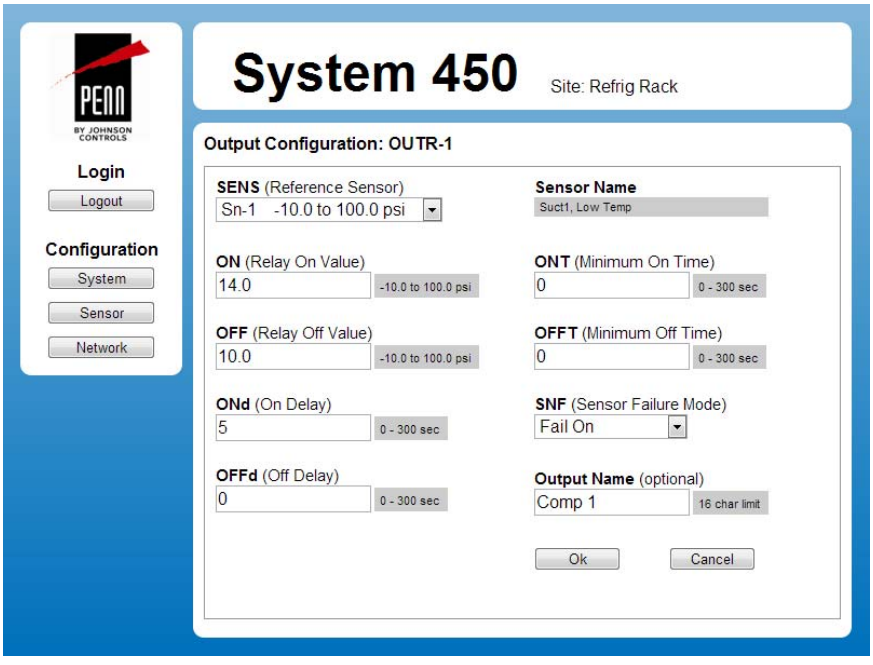

Output Configuration Screen for OUTR-1

Note: Refer to the *System 450 Series Control Modules with Communications Technical Bulletin (LIT-12011826)* for information on setting up the network parameters for your Ethernet network.

The performance specifications are nominal and conform to acceptable industry standards. For applications at conditions beyond these specifications, consult the local Johnson Controls office. Johnson Controls, Inc. shall not be liable for damages resulting from misapplication or misuse of its products. © 2015 Johnson Controls, Inc.

Cooling Tower Control with Two-Speed Fan/Low Temperature Lockout

IMPORTANT: Use this System 450™ modular control assembly only as an operating control. Where failure or malfunction of the System 450 modular control assembly could lead to personal injury or property damage to the controlled equipment or other property, additional precautions must be designed into the control system. Incorporate and maintain other devices, such as supervisory or alarm systems or safety or limit controls, intended to warn of or protect against failure or malfunction of the System 450 modular control assembly.

Refer to the *System 450 Series Modular Control Systems with Standard Control Modules Technical Bulletin (LIT-12011459)*, the *System 450 Series Modular Controls Product Bulletin (LIT-12011458)*, *A99B Series Temperature Sensors Product Technical Bulletin (LIT-125186)*, and the installation instructions for product specifications, detailed installation procedures, and important product safety information.

A C450CBN-x Control Module with Relay Output, used with a C450SCN-x Expansion Module with Relay Output and two A99 Series Temperature sensors, monitors and controls the water temperature in the cooling tower sump.

On an increase in sump temperature (Sn-2), the low speed fan winding is energized by the normally open contact on the left side relay (OUTR2) of the expansion module, which is in series with the normally closed contact on the right side relay (OUTR3) of the expansion module. As temperature at Sn-2 increases, the right side relay energizes, breaking contact to the low speed winding and energizing the high speed winding. If the outside air temperature (Sn-1) falls below the desired lockout temperature, the System 450 control module de-energizes the fan circuit by breaking the power connection to the System 450 relay outputs (OUTR1).

The control module relay output (OUTR3) references Sn-1 and de-energizes power to the fans when the outside air temperature falls below the desired lockout temperature. Set up the desired setpoints for each relay. See the figures on the following pages to wire the components and set up the screens in the UI.

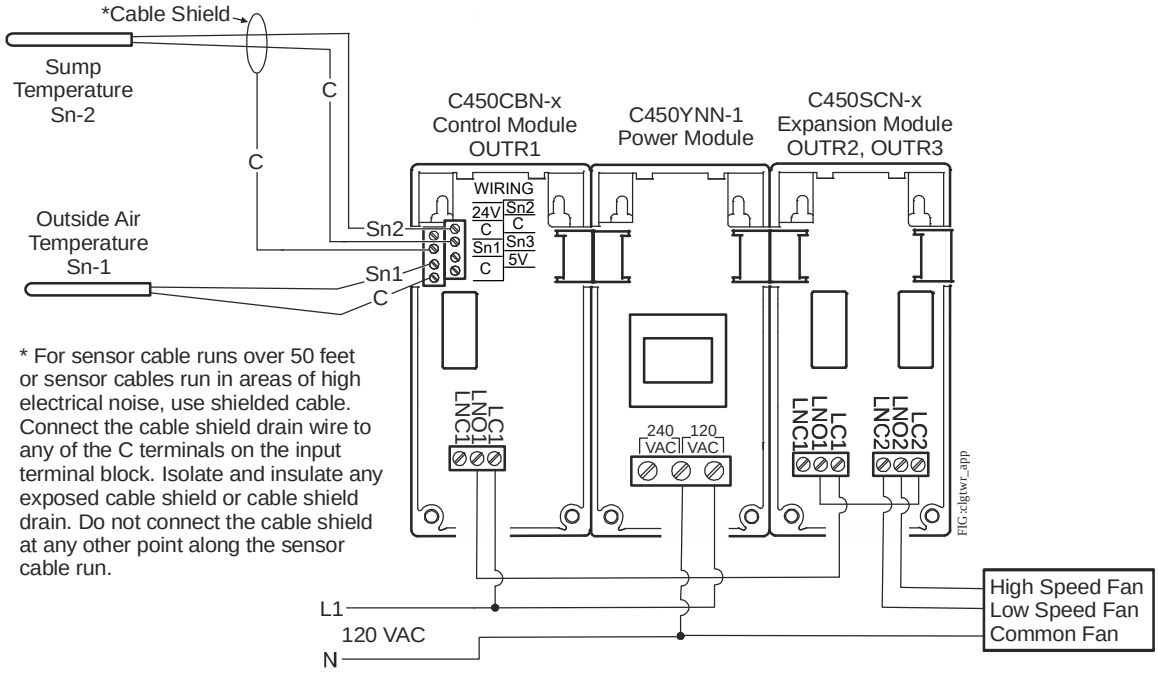

* For sensor cable runs over 50 feet or sensor cables run in areas of high electrical noise, use shielded cable. Connect the cable shield drain wire to any of the C terminals on the input terminal block. Isolate and insulate any exposed cable shield or cable shield drain. Do not connect the cable shield at any other point along the sensor cable run.

Wiring Diagram for Typical Cooling Tower Application Using System 450 Components

The performance specifications are nominal and conform to acceptable industry standards. For applications at conditions beyond these specifications, consult the local Johnson Controls office. Johnson Controls, Inc. shall not be liable for damages resulting from misapplication or misuse of its products. © 2015 Johnson Controls, Inc. **www.johnsoncontrols.com**

Cooling Tower Control with Two-Speed Fan/Low Temperature Lockout (Continued)

Status Screens:

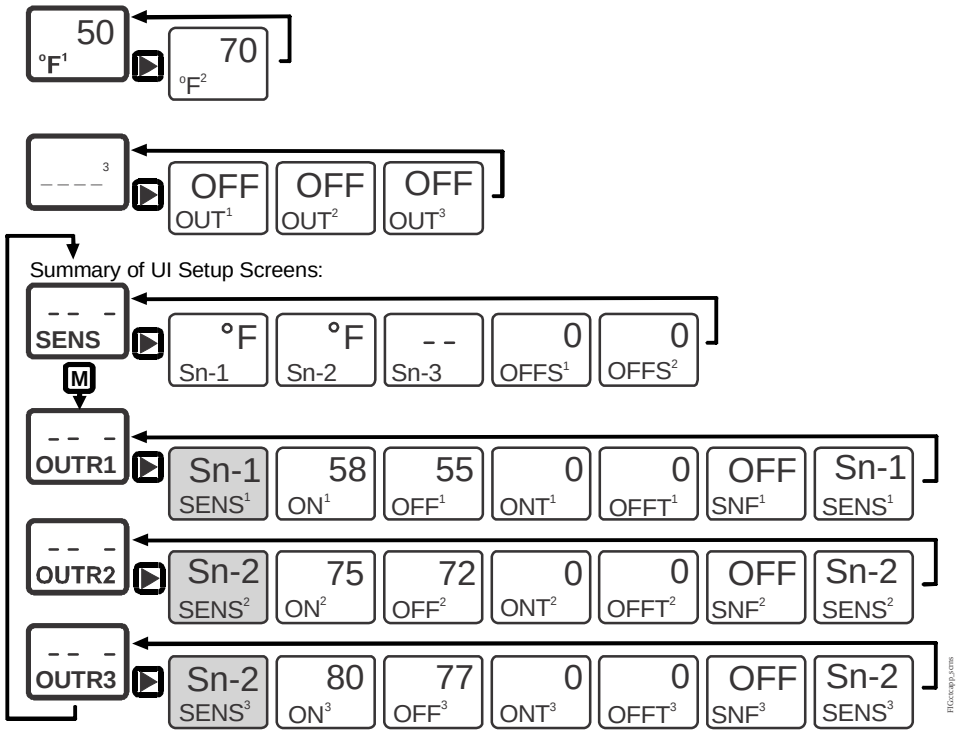

Note: The Sensor Selection screens (in gray) only appear when you first set up each output. After you have selected a sensor for an output, the Sensor Selection screen only appears at the end of the Output Setup screens. If you need to select a different sensor for an output, navigate to the Sensor Edit screen at the end of the Output Setup screens, change the selected sensor, press the right arrow key, and enter the new values for the output.

UI Screens for the Typical Cooling Tower Application Using System 450 Components Example

The performance specifications are nominal and conform to acceptable industry standards. For applications at conditions beyond these specifications, consult the local Johnson Controls office. Johnson Controls, Inc. shall not be liable for damages resulting from misapplication or misuse of its products. © 2015 Johnson Controls, Inc.

Cooling Tower Control with Two-Speed Fan/Low Temperature Lockout (Continued)

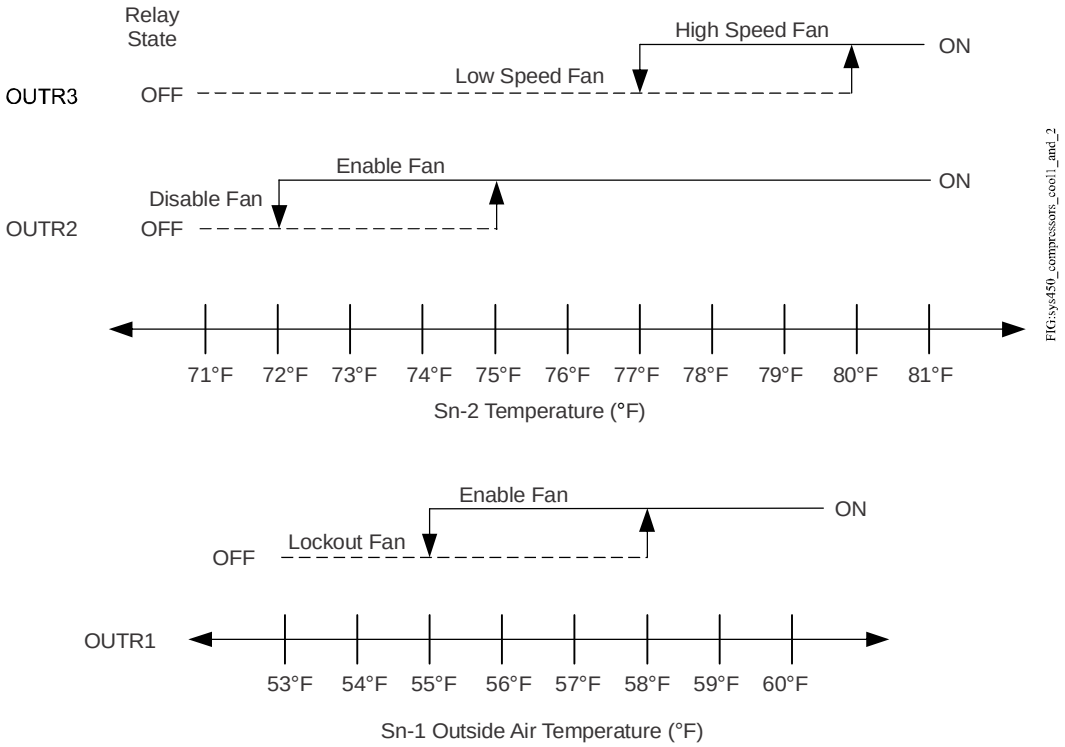

Note: OUTR1 locks out the Cooling Tower Control when the outside air temperature (Sn-1) is below 55°F.

Cooling Tower Fan Control

The performance specifications are nominal and conform to acceptable industry standards. For applications at conditions beyond these specifications, consult the local Johnson Controls office. Johnson Controls, Inc. shall not be liable for damages resulting from misapplication or misuse of its products. © 2015 Johnson Controls, Inc. **www.johnsoncontrols.com**

Two-Speed Fan Motor Control Using Any Compatible Pressure, Humidity, or Temperature Sensor

IMPORTANT: Use this System 450™ modular control assembly only as an operating control. Where failure or malfunction of the System 450 modular control assembly could lead to personal injury or property damage to the controlled equipment or other property, additional precautions must be designed into the control system. Incorporate and maintain other devices, such as supervisory or alarm systems or safety or limit controls, intended to warn of or protect against failure or malfunction of the System 450 modular control assembly.

Refer to the *System 450 Series Modular Control Systems with Standard Control Modules Technical Bulletin (LIT-12011459)*, the *System 450 Series Modular Controls Product Bulletin (LIT-12011458)*, and the installation instructions for product specifications, detailed installation procedures, and important product safety information.

You can wire a C450CCN-x Control Module and a C450YNN-1 Power Module, along with a pressure, humidity, or temperature sensor, to control a two-speed fan motor.

You can attach C450Sxx Series Expansion Modules and up to two additional sensors (pressure, humidity, or temperature) to create additional control loops, if desired.

Note: You can control this application based on temperature, pressure, or humidity. This example depicts a temperature application. Refer to the technical bulletin for more information on selecting and setting up System 450 compatible sensors for your application.

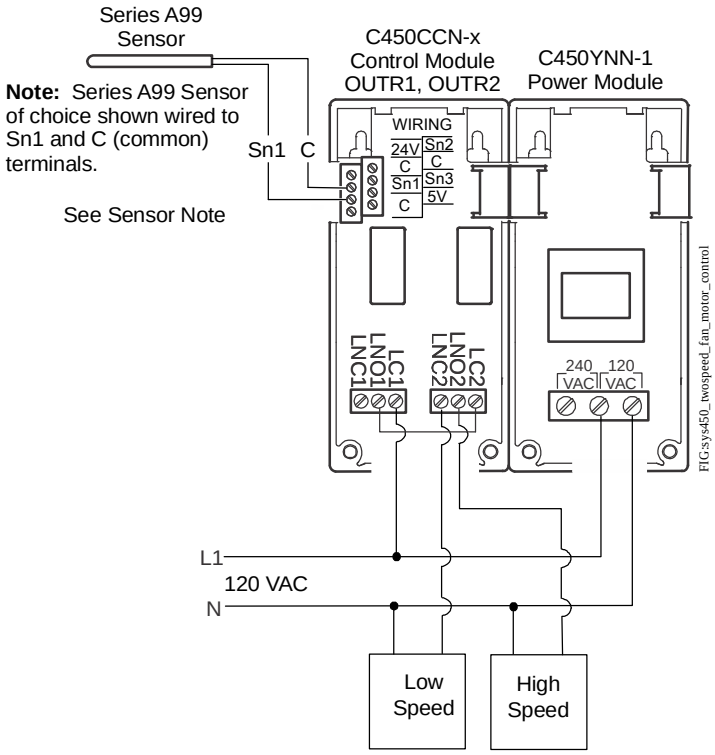

Wiring a C450CCN-x Control Module, a C450YNN-1 Power Module, and a Temperature Sensor to Control a Two-Speed Fan Motor

The performance specifications are nominal and conform to acceptable industry standards. For applications at conditions beyond these specifications, consult the local Johnson Controls office. Johnson Controls, Inc. shall not be liable for damages resulting from misapplication or misuse of its products. © 2015 Johnson Controls, Inc. **www.johnsoncontrols.com**

Two-Speed Fan Motor Control Using Any Compatible Pressure, Humidity, or Temperature Sensor (Continued)

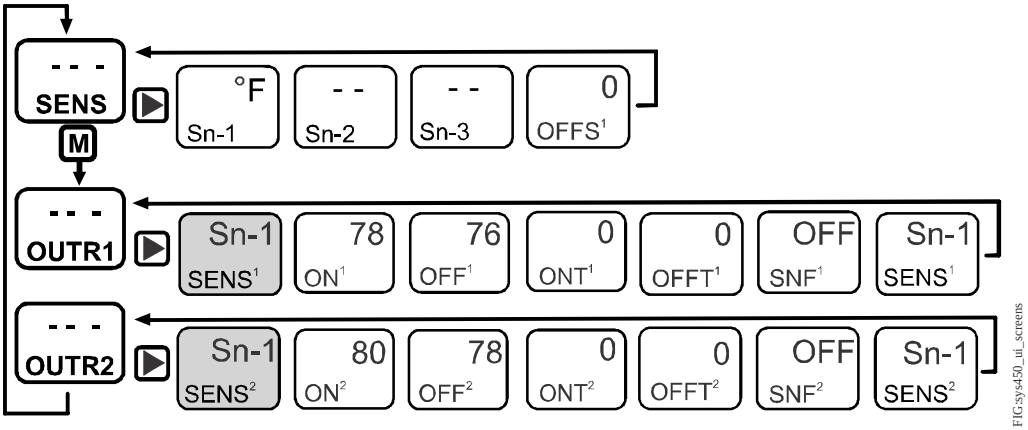

Note: The Sensor Selection screens (in gray) only appear when you first set up each output. After you have selected a sensor for an output, the Sensor Selection screen only appears at the end of the Output Setup screens. If you need to select a different sensor for an output, navigate to the Sensor Edit screen at the end of the Output Setup screens, change the selected sensor, press the right arrow key, and enter the new values for the output.

Setup and UI Screens for the C450CCN-x Control Module, a C450YNN-1 Power Module, and a Temperature Sensor to Control a Two-Speed Fan Motor Example

The performance specifications are nominal and conform to acceptable industry standards. For applications at conditions beyond these specifications, consult the local Johnson Controls office. Johnson Controls, Inc. shall not be liable for damages resulting from misapplication or misuse of its products. © 2015 Johnson Controls, Inc.

Differential Control to Replace a Standard Differential Pressure Transmitter

IMPORTANT: Use the System 450™ control module only as an operating control. Where failure or malfunction of the System 450 control module could lead to personal injury or property damage to the controlled equipment or other property, additional precautions must be designed into the control system. Incorporate and maintain other devices, such as supervisory or alarm systems or safety or limit controls, intended to warn of or protect against failure or malfunction of the System 450 control module.

Refer to the *System 450 Series Modular Control Systems with Standard Control Modules Technical Bulletin (LIT-12011459)*, the *System 450 Series Modular Controls Product Bulletin (LIT-12011458)*, and the installation instructions for product specifications, detailed installation procedures, and important product safety information.

You can use System 450 to measure a pressure difference across pumps, heat exchangers, and similar devices where you want to control a device using differential pressure. Compared to a Differential Pressure Transmitter (DPT), installing System 450 is simpler, requires less hardware, and is less labor-intensive, saving time and money. System 450 parameters are easy to configure and readjust, if necessary, making it much more flexible than a DPT.

A DPT requires a manifold, a bleeder valve, isolation valves, a bypass valve, and associated piping. Only the isolation valves are required for a System 450 installation.

In this example, a System 450 control system with two identical pressure transducers is set up to control pump speed based on the pressure differential detected between the Sn-1 and Sn-2 transducers. When Sn-1 and Sn-2 are the same Sensor type, the Differential Sensor (Sn-d) is automatically enabled and available for selection when you set up the control system outputs.

When the Differential Control sensor (Sn-d) is referenced, the differential sensor value is always equal to Sn-1 minus Sn-2.

The sensed differential value (Sn-d) between Sn-1 and Sn-2 is displayed in the System Status screens as either a temperature differential value (dIFT), pressure differential value (dIFP), or humidity differential value (dIFH). For example, if Sn-1 has a value of 58 and Sn-2 has a value of 55, Sn-d has a value of 3 (58 minus 55).

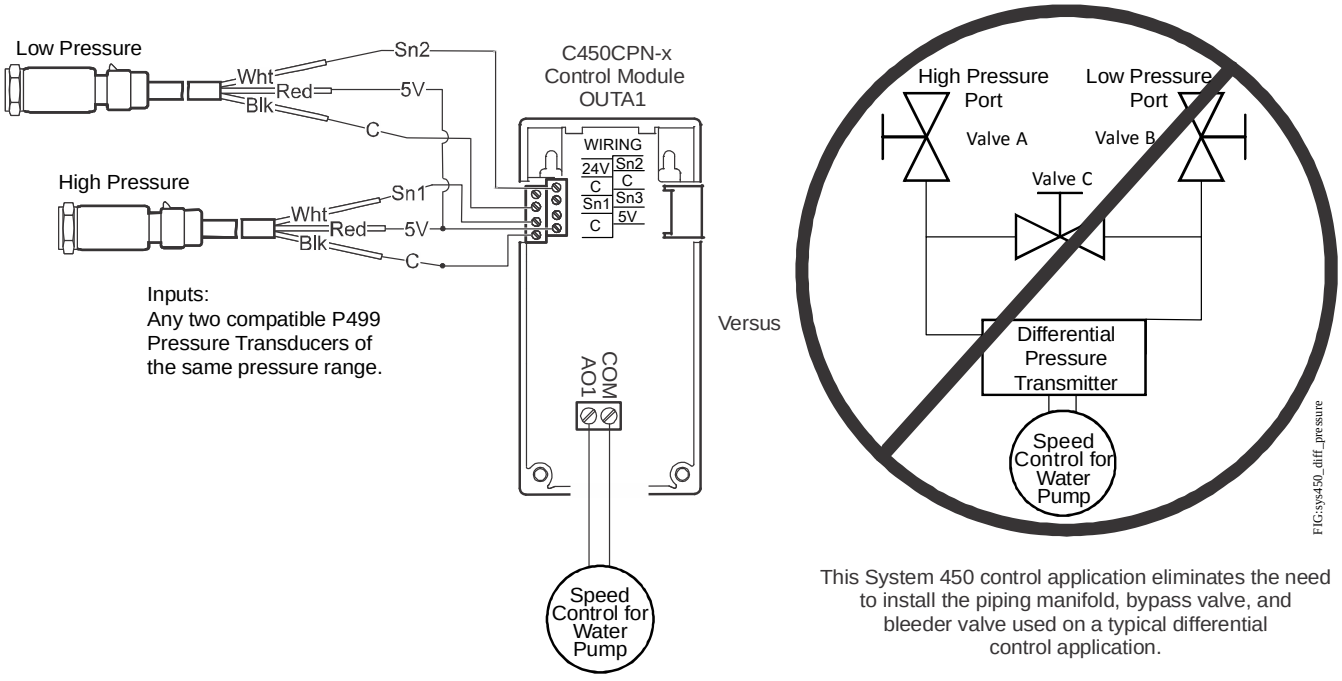

This System 450 control application eliminates the need to install the piping manifold, bypass valve, and bleeder valve used on a typical differential control application.

Comparison of a System 450 Differential Pressure Control to a Differential Pressure Transmitter Using a Variable Speed Water Pump to Regulate Differential Water Pressure

The performance specifications are nominal and conform to acceptable industry standards. For applications at conditions beyond these specifications, consult the local Johnson Controls office. Johnson Controls, Inc. shall not be liable for damages resulting from misapplication or misuse of its products. © 2015 Johnson Controls, Inc.

Differential Control to Replace a Standard Differential Pressure Transmitter (Continued)

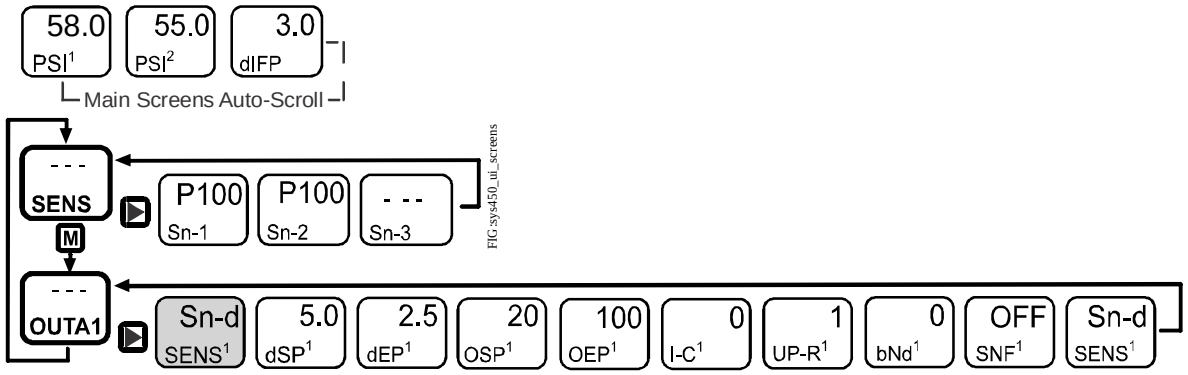

Note: The Sensor Selection screens (in gray) only appear when you first set up each output. After you have selected a sensor for an output, the Sensor Selection screen only appears at the end of the Output Setup screens. If you need to select a different sensor for an output, navigate to the Sensor Edit screen at the end of the Output Setup screens, change the selected sensor, press the right arrow key, and enter the new values for the output.

UI Screen Parameters Needed to Set Up Sensors for Differential Pressure Control

The performance specifications are nominal and conform to acceptable industry standards. For applications at conditions beyond these specifications, consult the local Johnson Controls office. Johnson Controls, Inc. shall not be liable for damages resulting from misapplication or misuse of its products. © 2015 Johnson Controls, Inc.

Attaining Equal Runtimes on Redundant Mechanical Systems

IMPORTANT: Use the System 450™ control module only as an operating control. Where failure or malfunction of the System 450 control module could lead to personal injury or property damage to the controlled equipment or other property, additional precautions must be designed into the control system. Incorporate and maintain other devices, such as supervisory or alarm systems or safety or limit controls, intended to warn of or protect against failure or malfunction of the System 450 control module.

Refer to the *System 450 Series Modular Control Systems with Reset Control Modules Technical Bulletin (LIT-12011842)*, the *System 450 Series Modular Controls Product Bulletin (LIT-12011458)*, and the installation instructions for product specifications, detailed installation procedures, and important product safety information

The C450RCN-x Reset Control Module enables you to keep the runtimes approximately equal on applications with redundant equipment. This example uses two similar cooling units with a space setpoint of 55°F. To attain equal runtimes on both cooling units, you must use the Reset function (rES) in conjunction with the balancing function (bAL).

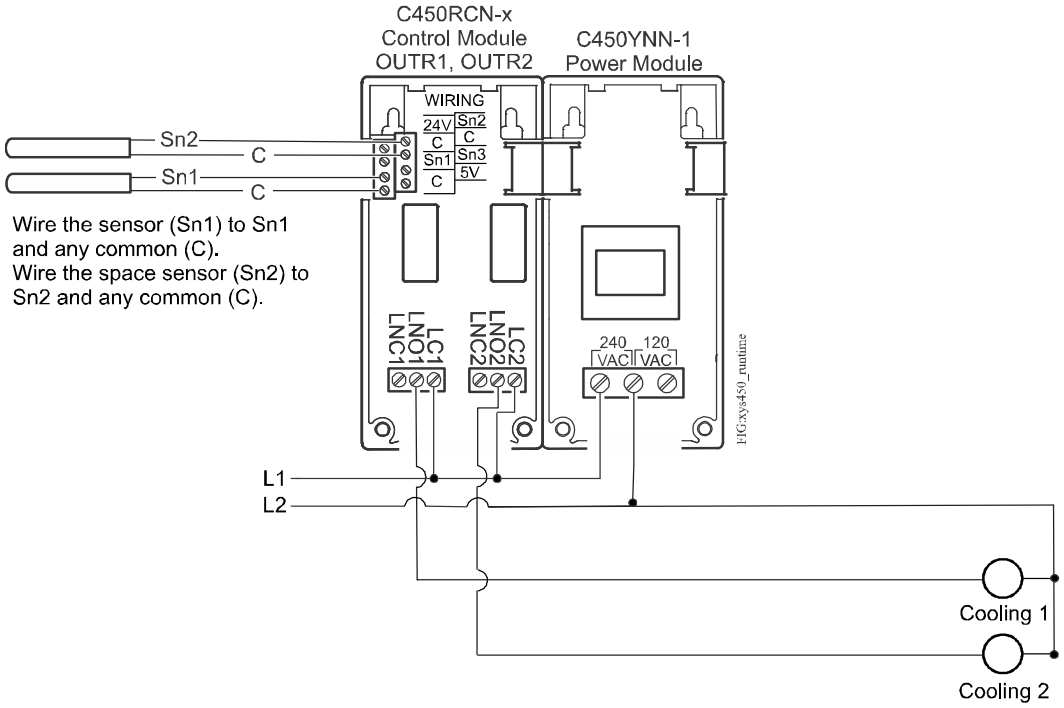

C450RCN-x Control Module Attaining Equal Runtimes on Redundant Mechanical Systems

The performance specifications are nominal and conform to acceptable industry standards. For applications at conditions beyond these specifications, consult the local Johnson Controls office. Johnson Controls, Inc. shall not be liable for damages resulting from misapplication or misuse of its products. © 2015 Johnson Controls, Inc. **www.johnsoncontrols.com**

Attaining Equal Runtimes on Redundant Mechanical Systems (Continued)

In this example, Sensor 2 (Sn-2) is the space sensor. Sensor 1 (Sn-1) must be installed, although the physical location of Sn-1 is not important in this example. The desired 55°F space temperature setpoint is attained by setting both the minimum setpoint (MNSP) and the maximum setpoint (MXSP) to 55°F. The control cycles the output relay (unit) with the fewest hours, keeping the runtime hours approximately equal.

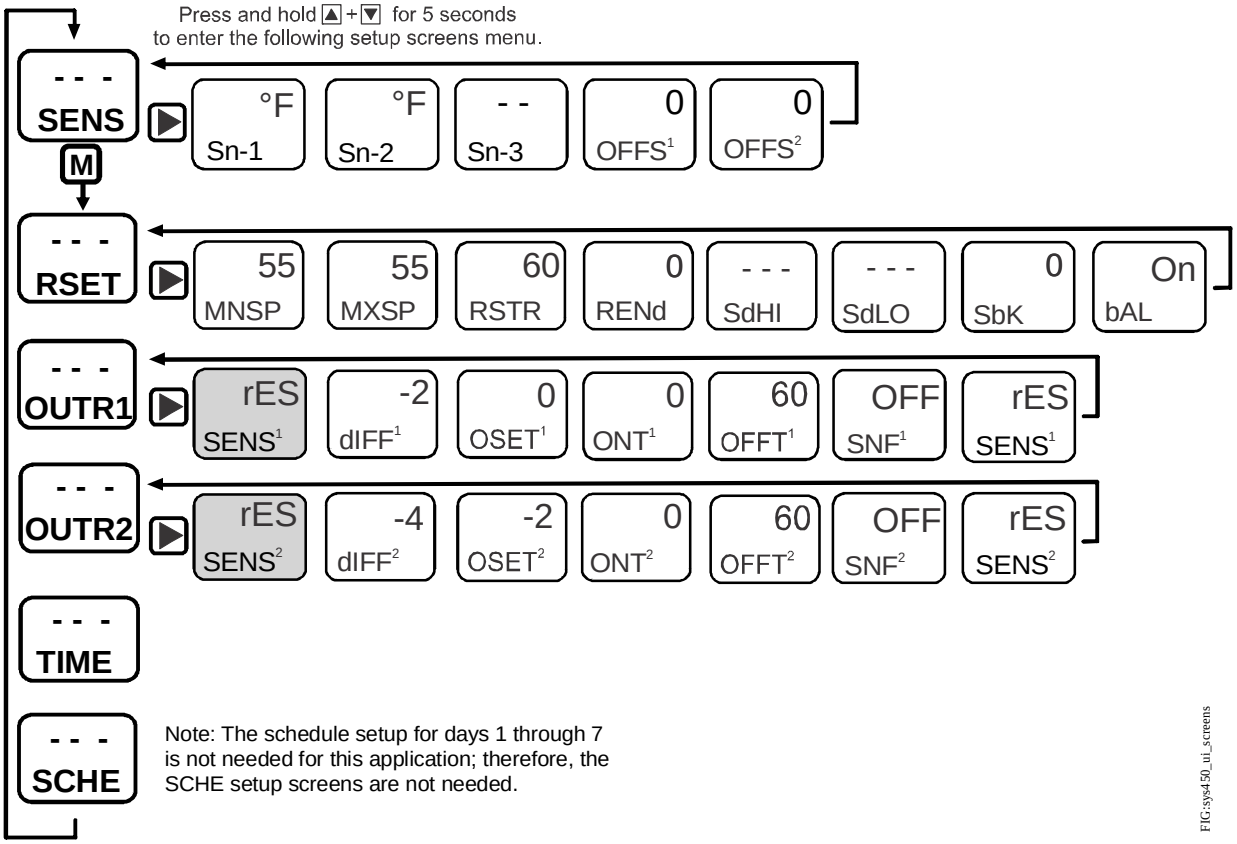

Note: The Sensor Selection screens (in gray) only appear when you first set up each output. After you have selected a sensor for an output, the Sensor Selection screen only appears at the end of the Output Setup screens. If you need to select a different sensor for an output, navigate to the Sensor Edit screen at the end of the Output Setup screens, change the selected sensor, press the right arrow key, and enter the new values for the output.

Status and UI Setup Screens for the C450RCN-x Control Module Attaining Equal Runtimes on Redundant Mechanical Systems Example

The performance specifications are nominal and conform to acceptable industry standards. For applications at conditions beyond these specifications, consult the local Johnson Controls office. Johnson Controls, Inc. shall not be liable for damages resulting from misapplication or misuse of its products. © 2015 Johnson Controls, Inc. **www.johnsoncontrols.com**

A99 and TE-6000 Temperature Sensor Averaging

IMPORTANT: The A99 and TE-6000 temperature sensors are intended to provide an input to equipment under normal operating conditions. Where failure or malfunction of the A99 and TE-6000 temperature sensors could lead to personal injury or property damage to the controlled equipment or other property, additional precautions must be designed into the control system. Incorporate and maintain other devices, such as supervisory or alarm systems or safety or limit controls, intended to warn of or protect against failure or malfunction of the A99 and TE-6000 temperature sensors.

Note: Use shielded wire when you install the sensor more than 50 feet (15.25 meters) from the controller.

IMPORTANT: When connecting an A99 or a TE-6000 temperature sensor with shielded cable to an electronic controller, connect the cable shield drain lead to a low-voltage common terminal on the input sensor terminal block. Do not connect the shield at any other point along the cable. Isolate and insulate the shield drain at the sensor end of the cable. Connecting a cable shield at more than one point can enable transient currents to flow through the sensor cable shield, which can cause erratic control operation.

System 450 uses the A99 Series PTC Silicon Temperature Sensors or TE-6000 Series 1000 Ohm Nickel Temperature Sensors. You can apply sensor averaging to System 450 applications. Refer to the *A99B Series Temperature Sensors Product Technical Bulletin (LIT-125186) or the TE-6000 Series Temperature Sensing Elements Product Bulletin (LIT-216288)* for sensor information.

In many applications, a single temperature sensor cannot provide an accurate temperature reading of the entire space. Sensors can be wired in a series/parallel arrangement to average the readings of all sensors in the network.

When averaging sensor readings, you must always have the same type of sensor (A99 or TE-6000) and the same number of parallel-connected legs as there are series-connected sensors per leg. See the following diagrams for an illustration of how averaging can be accomplished using four or nine sensors.

Note: The A99B Series Temperature Sensors and the TE-6000 Series Temperature are not compatible, and the sensors in the averaging arrays must be all A99B sensors or all TE-6000 sensors.

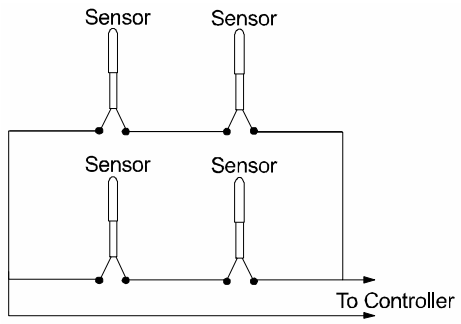

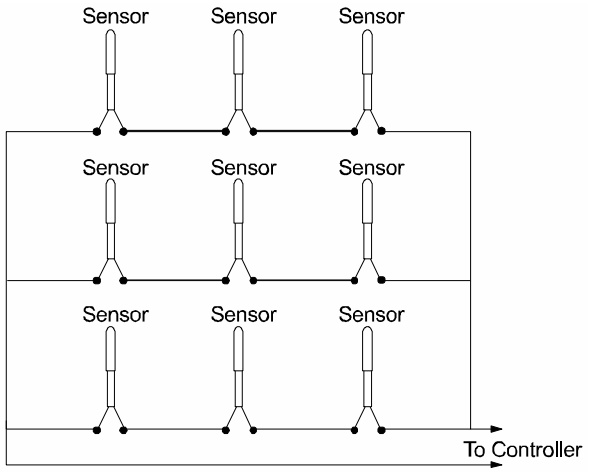

Four and Nine Temperature Sensors Wired in Series/Parallel Arrangement Schematics

The performance specifications are nominal and conform to acceptable industry standards. For applications at conditions beyond these specifications, consult the local Johnson Controls office. Johnson Controls, Inc. shall not be liable for damages resulting from misapplication or misuse of its products. © 2015 Johnson Controls, Inc. **www.johnsoncontrols.com**

A99 and TE-6000 Temperature Sensor Averaging (Continued)

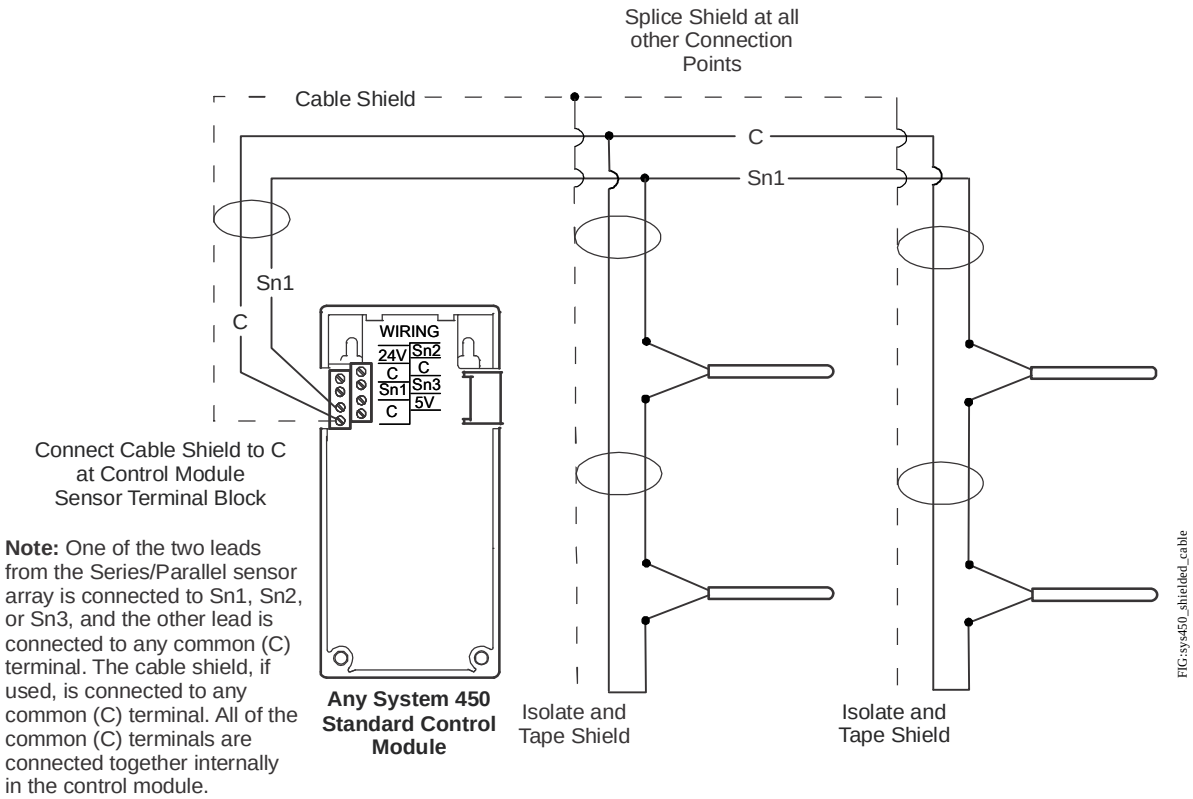

Wiring of A99 Series or TE-6000 1000 Ohm Nickel Series Sensors for Temperature Averaging Using a Shielded Cable

The performance specifications are nominal and conform to acceptable industry standards. For applications at conditions beyond these specifications, consult the local Johnson Controls office. Johnson Controls, Inc. shall not be liable for damages resulting from misapplication or misuse of its products. © 2015 Johnson Controls, Inc.

Proportional Temperature Control of M9200 Series Actuators with Remote Minimum Positioning

IMPORTANT: Use this System 450™ modular control assembly only as an operating control. Where failure or malfunction of the System 450 modular control assembly could lead to personal injury or property damage to the controlled equipment or other property, additional precautions must be designed into the control system. Incorporate and maintain other devices, such as supervisory or alarm systems or safety or limit controls, intended to warn of or protect against failure or malfunction of the System 450 modular control assembly.

Refer to the *System 450 Series Modular Control Systems with Standard Control Modules Technical Bulletin (LIT-12011459)*, the *System 450 Series Modular Controls Product Bulletin (LIT-12011458)*, and the installation instructions for product specifications, detailed installation procedures, and important product safety information.

You can use a System 450 Control Module with analog output, a temperature sensor, and a Y45AA-9 Rheostat to control air temperature at the sensor by modulating an M9200 Series Actuator driving an outside air damper.

Use the rheostat to manually set the minimum air position of the damper between 0 and 50%. The temperature sensed at Sn-1 controls the damper position between the rheostat adjusted minimum position (0 to 50%) and full open.

Set the minimum output on the C450CPN-x Control Module to 0% rotation and then use the Y45AA-9 Rheostat to set the minimum position remotely.

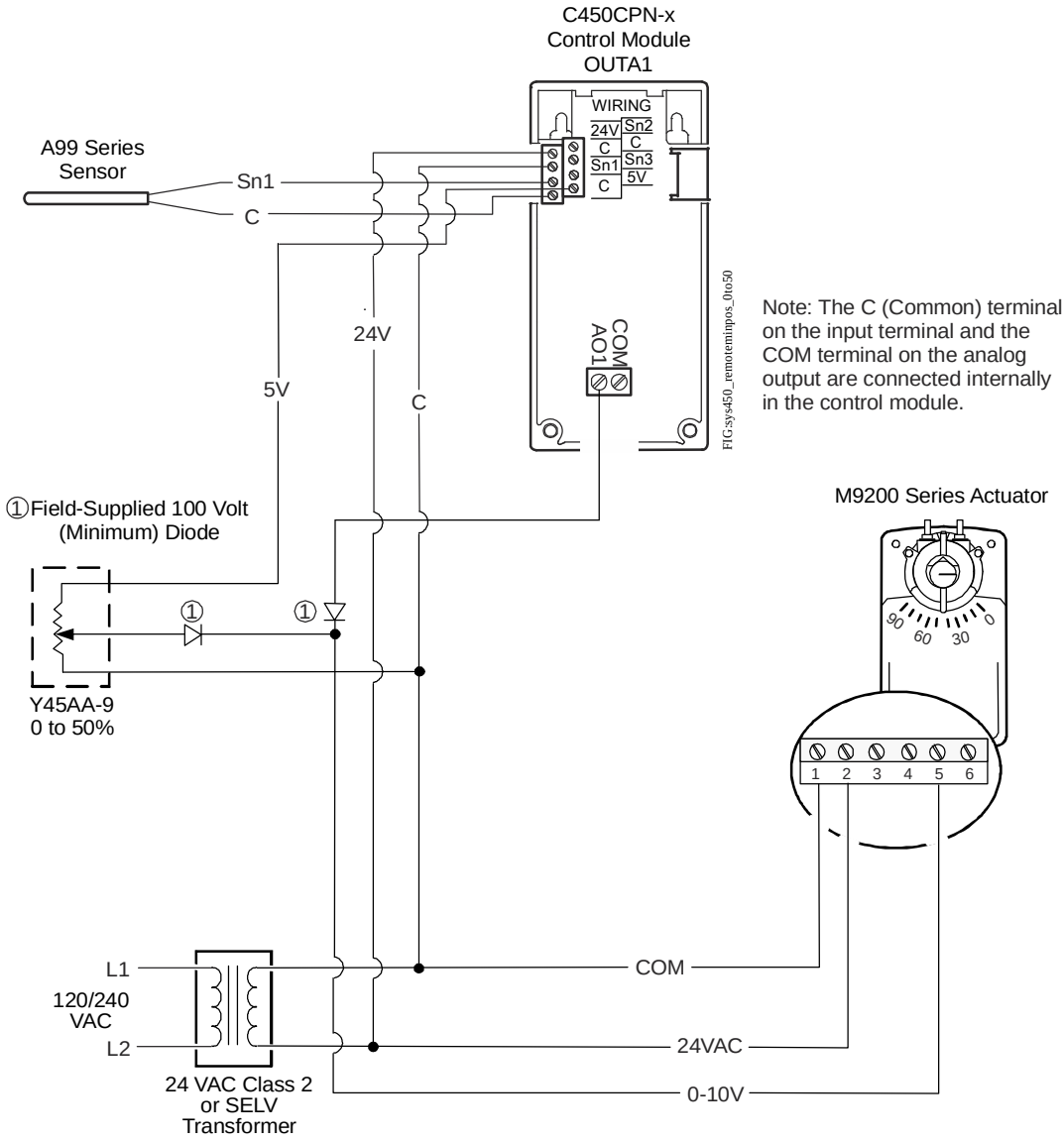

Wiring for Remote 0 to 50% Minimum Positioning Application

The performance specifications are nominal and conform to acceptable industry standards. For applications at conditions beyond these specifications, consult the local Johnson Controls office. Johnson Controls, Inc. shall not be liable for damages resulting from misapplication or misuse of its products. © 2015 Johnson Controls, Inc. **www.johnsoncontrols.com**

Proportional Temperature Control of M9200 Series Actuators with Remote Minimum Positioning (Continued)

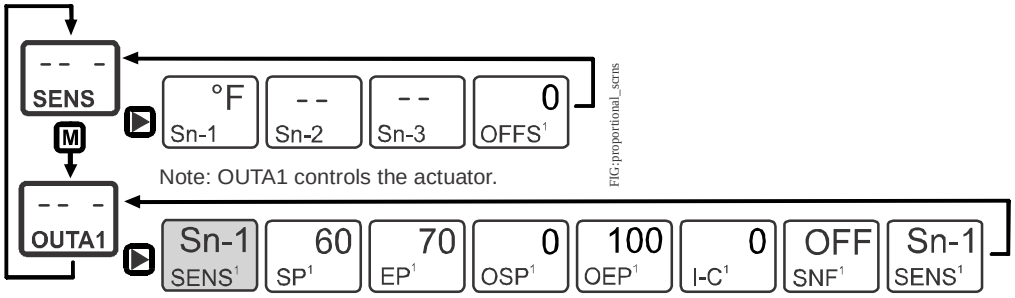

Note: The Sensor Selection screens (in gray) only appear when you first set up each output. After you have selected a sensor for an output, the Sensor Selection screen only appears at the end of the Output Setup screens. If you need to select a different sensor for an output, navigate to the Sensor Edit screen at the end of the Output Setup screens, change the selected sensor, press the right arrow key, and enter the new values for the output.

UI Screens for Wiring for the Remote 0 to 50% Minimum Positioning Application Example

The performance specifications are nominal and conform to acceptable industry standards. For applications at conditions beyond these specifications, consult the local Johnson Controls office. Johnson Controls, Inc. shall not be liable for damages resulting from misapplication or misuse of its products. © 2015 Johnson Controls, Inc. **www.johnsoncontrols.com**

Room Temperature, Humidity, and Static Pressure Control System with Communications

IMPORTANT: Use the System 450™ control module only as an operating control. Where failure or malfunction of the System 450 control module could lead to personal injury or property damage to the controlled equipment or other property, additional precautions must be designed into the control system. Incorporate and maintain other devices, such as supervisory or alarm systems or safety or limit controls, intended to warn of or protect against failure or malfunction of the System 450 control module.

Refer to the *System 450 Series Modular Control Systems with Communications Control Modules (LIT-12011826)*, the *System 450 Series Modular Controls Product Bulletin (LIT-12011458)*, and the installation instructions for product specifications, detailed installation procedures, and important product safety information.

In this example, the C450CEN-x Control Module with Ethernet Communications controls the space temperature (heating and cooling), humidity, and the space static pressure of the application. The static pressure uses a floating control strategy, the heating and cooling employ analog control (0 to 10 VDC), and the humidity is digitally controlled (on/off). Because this particular application is for a chicken hatchery, high temperature and humidity levels are required.

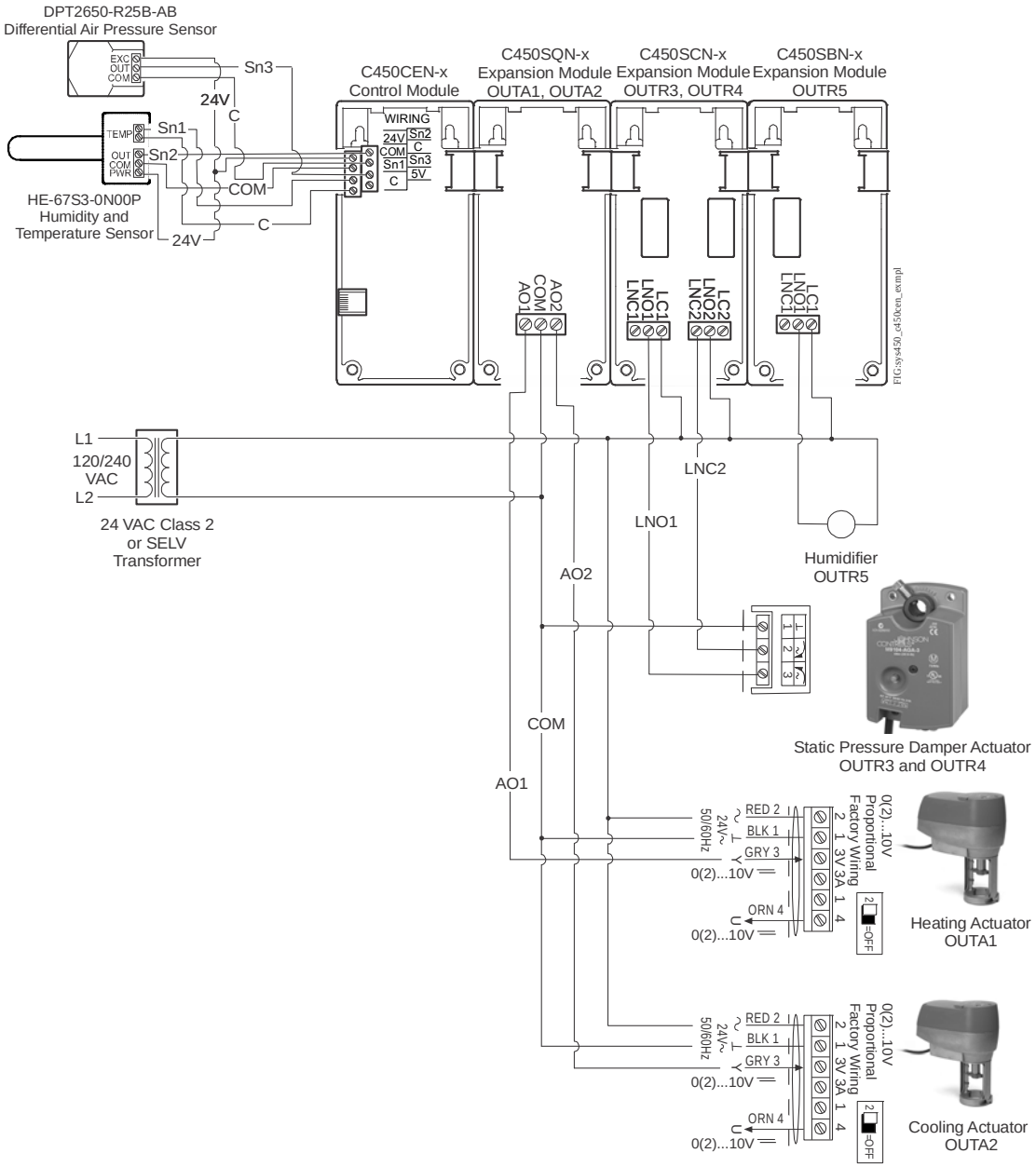

C450CEN-x Control Module Controlling Room Temperature, Humidity, and Static Pressure

The performance specifications are nominal and conform to acceptable industry standards. For applications at conditions beyond these specifications, consult the local Johnson Controls office. Johnson Controls, Inc. shall not be liable for damages resulting from misapplication or misuse of its products. © 2015 Johnson Controls, Inc.

Room Temperature, Humidity, and Static Pressure Control System with Communications (Continued)

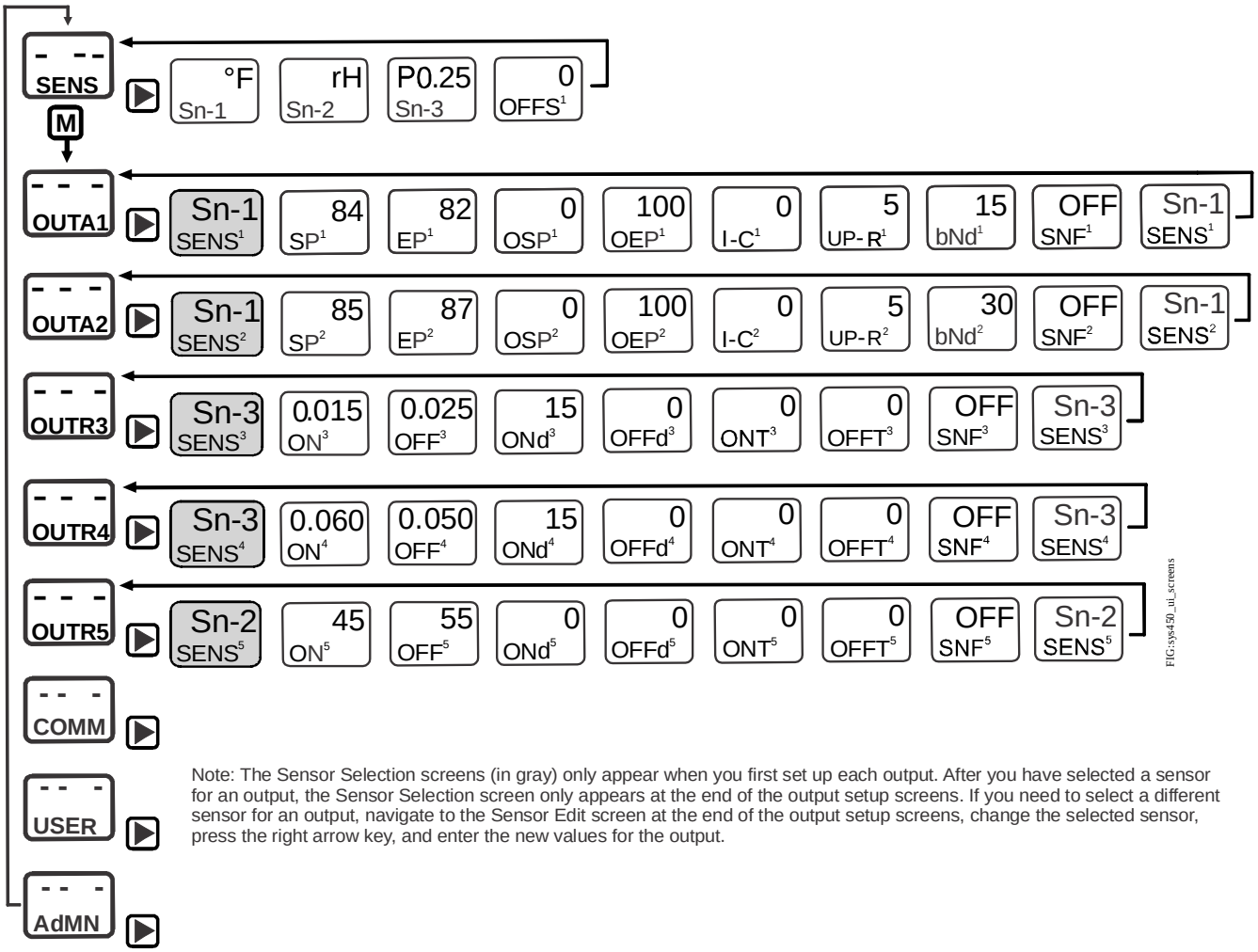

Note: The Sensor Selection screens (in gray) only appear when you first set up each output. After you have selected a sensor for an output, the Sensor Selection screen only appears at the end of the output setup screens. If you need to select a different sensor for an output, navigate to the Sensor Edit screen at the end of the output setup screens, change the selected sensor, press the right arrow key, and enter the new values for the output.

Status and UI Setup Screens for a Room Temperature, Humidity, and Static Pressure Control System with Ethernet Communications

The screen captures on the following pages show the web user interface on the C450CEN-x Control Module. Click the Sensor button to set up sensors (inputs) and the tool bar next to any output to set up the output. You must be logged in to make any changes.

Note: This example is for illustrative purposes only. Conditions may vary using different applications.

The performance specifications are nominal and conform to acceptable industry standards. For applications at conditions beyond these specifications, consult the local Johnson Controls office. Johnson Controls, Inc. shall not be liable for damages resulting from misapplication or misuse of its products. © 2015 Johnson Controls, Inc. **www.johnsoncontrols.com**

Room Temperature, Humidity, and Static Pressure Control System with Communications (Continued)

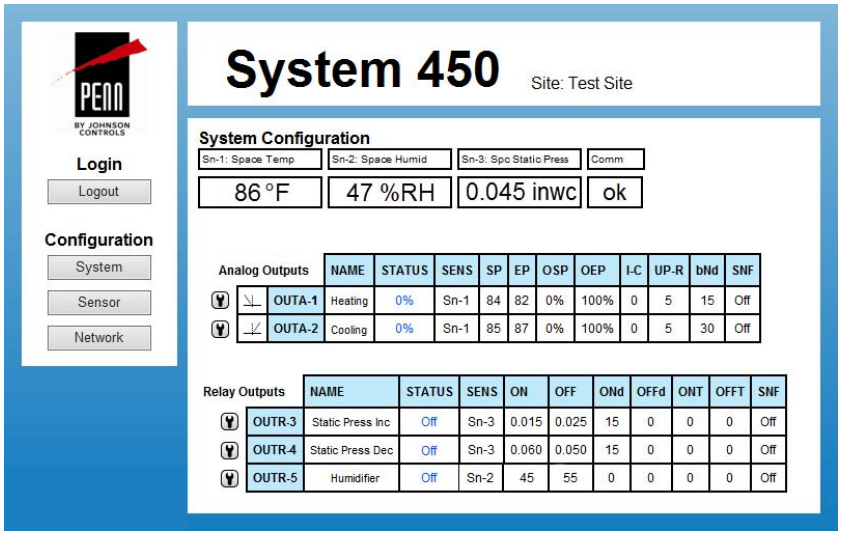

System Configuration Screen

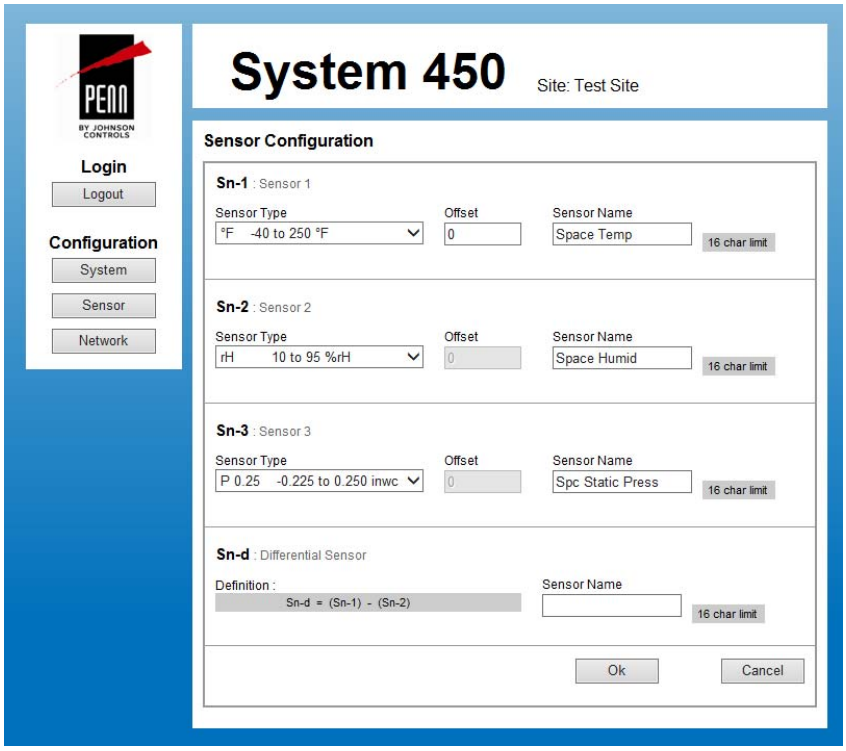

Sensor (Input) Configuration Screen

The performance specifications are nominal and conform to acceptable industry standards. For applications at conditions beyond these specifications, consult the local Johnson Controls office. Johnson Controls, Inc. shall not be liable for damages resulting from misapplication or misuse of its products. © 2015 Johnson Controls, Inc. **www.johnsoncontrols.com**

Room Temperature, Humidity, and Static Pressure Control System with Communications (Continued)

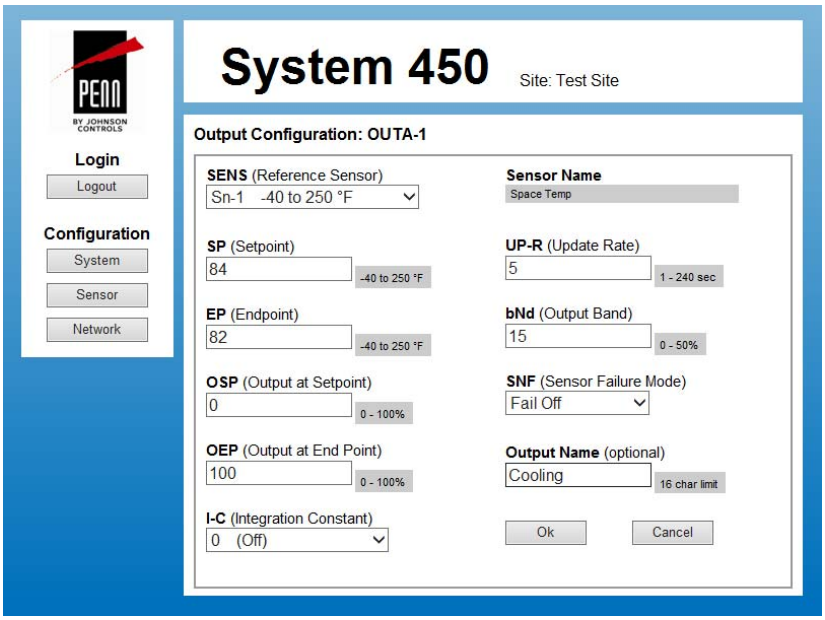

Analog Output Configuration Screen

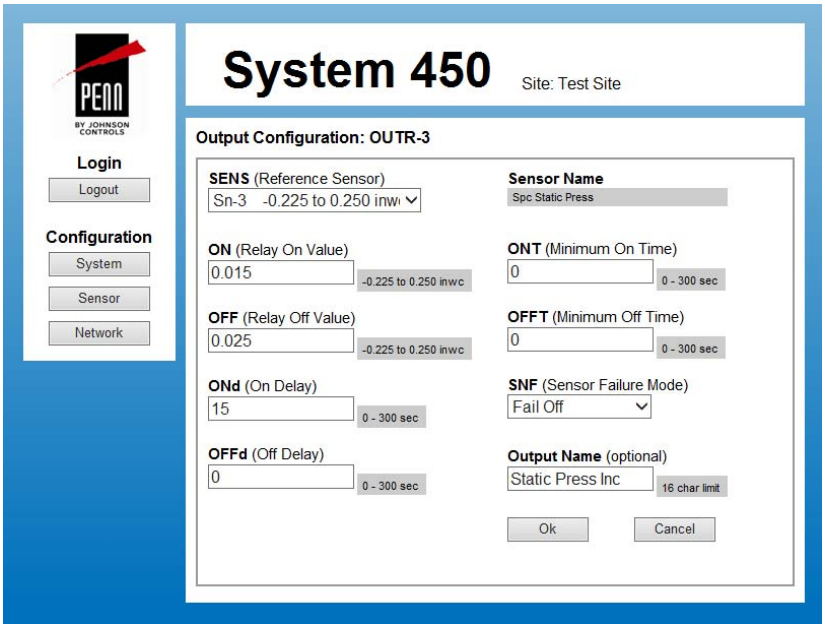

Relay Output Configuration Screen

Note: Refer to the *System 450 Series Control Modules with Communications Technical Bulletin (LIT-12011826)* for information on setting up the network parameters for your Ethernet network.

The performance specifications are nominal and conform to acceptable industry standards. For applications at conditions beyond these specifications, consult the local Johnson Controls office. Johnson Controls, Inc. shall not be liable for damages resulting from misapplication or misuse of its products. © 2015 Johnson Controls, Inc.

Heating and Cooling Control with System Status Indication

IMPORTANT: Use this System 450™ modular control assembly only as an operating control. Where failure or malfunction of the System 450 modular control assembly could lead to personal injury or property damage to the controlled equipment or other property, additional precautions must be designed into the control system. Incorporate and maintain other devices, such as supervisory or alarm systems or safety or limit controls, intended to warn of or protect against failure or malfunction of the System 450 modular control assembly.

Refer to the *System 450 Series Modular Control Systems with Standard Control Modules Technical Bulletin (LIT-12011459),* the *System 450 Series Modular Controls Product Bulletin (LIT-12011458),* and the installation instructions for product specifications, detailed installation procedures, and important product safety information.

The C450CCN-x Control Module maintains the temperature with the OUTR1 output connected to the heating equipment and the OUTR2 output connected to the cooling equipment. See the wiring diagram for an illustration of this connection. Use a C450SCN-x Expansion Module to activate indicator lights or alarms in the event of out-of-range temperature conditions.

When the system is in operation, one of three status lights or audible alarms indicates the operating status.

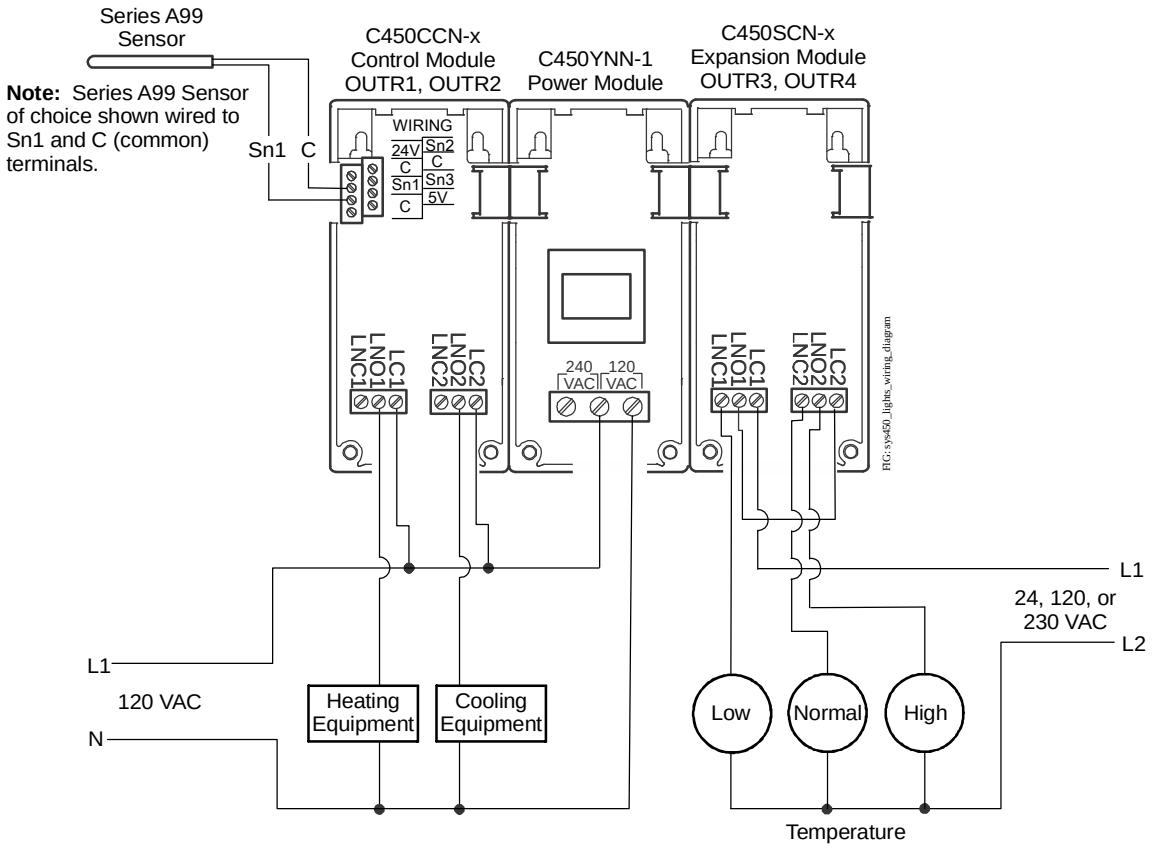

Heating and Cooling Control with System Status Lights Wiring Diagram

The performance specifications are nominal and conform to acceptable industry standards. For applications at conditions beyond these specifications, consult the local Johnson Controls office. Johnson Controls, Inc. shall not be liable for damages resulting from misapplication or misuse of its products. © 2015 Johnson Controls, Inc. **www.johnsoncontrols.com**

Heating and Cooling Control with System Status Indication (Continued)

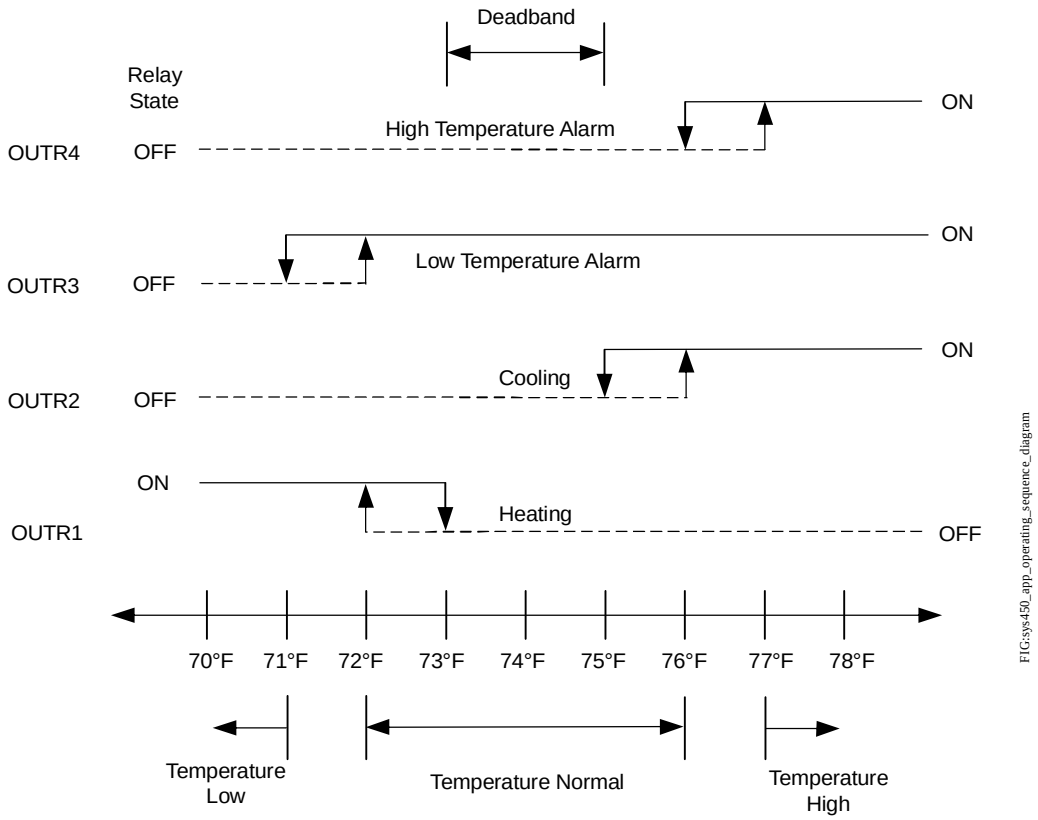

Application Operating Sequence

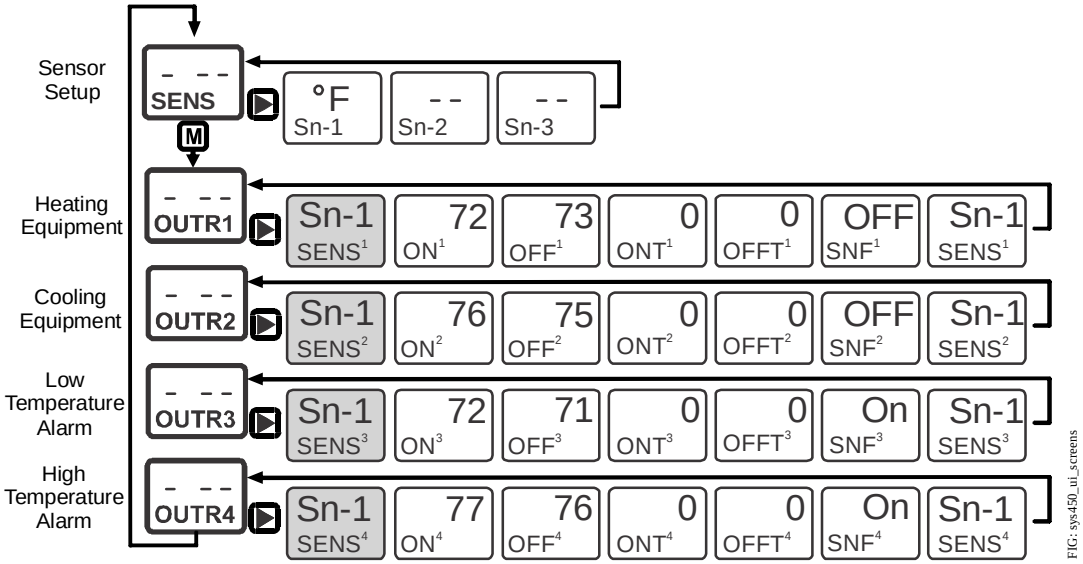

Note: The Sensor Selection screens (in gray) only appear when you first set up each output. After you have selected a sensor for an output, the Sensor Selection screen only appears at the end of the Output Setup screens. If you need to select a different sensor for an output, navigate to the Sensor Edit screen at the end of the Output Setup screens, change the selected sensor, press the right arrow key, and enter the new values for the output.

Setup Screens for the Heating and Cooling Control Applications with System Status Indication System Example

The performance specifications are nominal and conform to acceptable industry standards. For applications at conditions beyond these specifications, consult the local Johnson Controls office. Johnson Controls, Inc. shall not be liable for damages resulting from misapplication or misuse of its products. © 2015 Johnson Controls, Inc. **www.johnsoncontrols.com**

Proportional Temperature, Pressure, or Humidity Control of an M9100-GGA or M9100-GGC Actuator

IMPORTANT: Use this System 450™ modular control assembly only as an operating control. Where failure or malfunction of the System 450 modular control assembly could lead to personal injury or property damage to the controlled equipment or other property, additional precautions must be designed into the control system. Incorporate and maintain other devices, such as supervisory or alarm systems or safety or limit controls, intended to warn of or protect against failure or malfunction of the System 450 modular control assembly.

Refer to the *System 450 Series Modular Control Systems with Standard Control Modules Technical Bulletin (LIT-12011459)*, the *System 450 Series Modular Controls Product Bulletin (LIT-12011458)*, and the installation instructions for product specifications, detailed installation procedures, and important product safety information.

This application note illustrates how to wire a C450CPN-x Control Module to an M9100-GGA or M9100-GGC Actuator.

In these actuator application examples, Sn-1 is a °F (Sensor Type) and OUTA1 is an analog output that references the Sn-1 sensor. The M-9100 actuators are set up for control via a 2 to 10 VDC input signal from the System 450 control module. The System 450 control module provides 100% signal strength (10 VDC) at temperatures of 75°F and above, and 20% signal strength (2 VDC) at temperatures of 55°F and below. You can use any System 450 compatible sensor and any Setpoint or End Point values within the selected sensor's defined range of values to control your application.

In the following application examples, a single temperature sensor is used to provide the input signal. You can also control these applications with a pressure, humidity, or functional sensor. Refer to the technical bulletin for complete information on selecting and setting up System 450 compatible sensors.

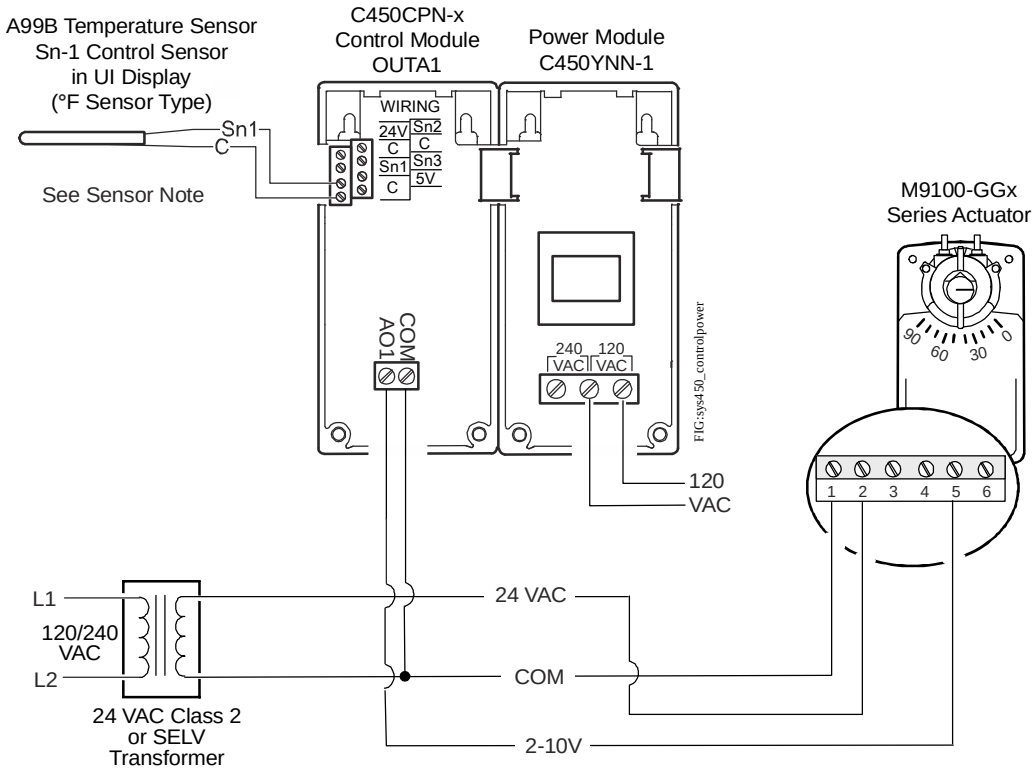

A C450CPN-x Control Module Powered by a C450YNN-1 Power Module Driving an M9100-GGA or M9100-GGC Actuator Powered by a Dedicated 24 VAC External Transformer

The performance specifications are nominal and conform to acceptable industry standards. For applications at conditions beyond these specifications, consult the local Johnson Controls office. Johnson Controls, Inc. shall not be liable for damages resulting from misapplication or misuse of its products. © 2015 Johnson Controls, Inc. **www.johnsoncontrols.com**

Proportional Temperature, Pressure, or Humidity Control of an M9100-GGA or M9100-GGC Actuator (Continued)

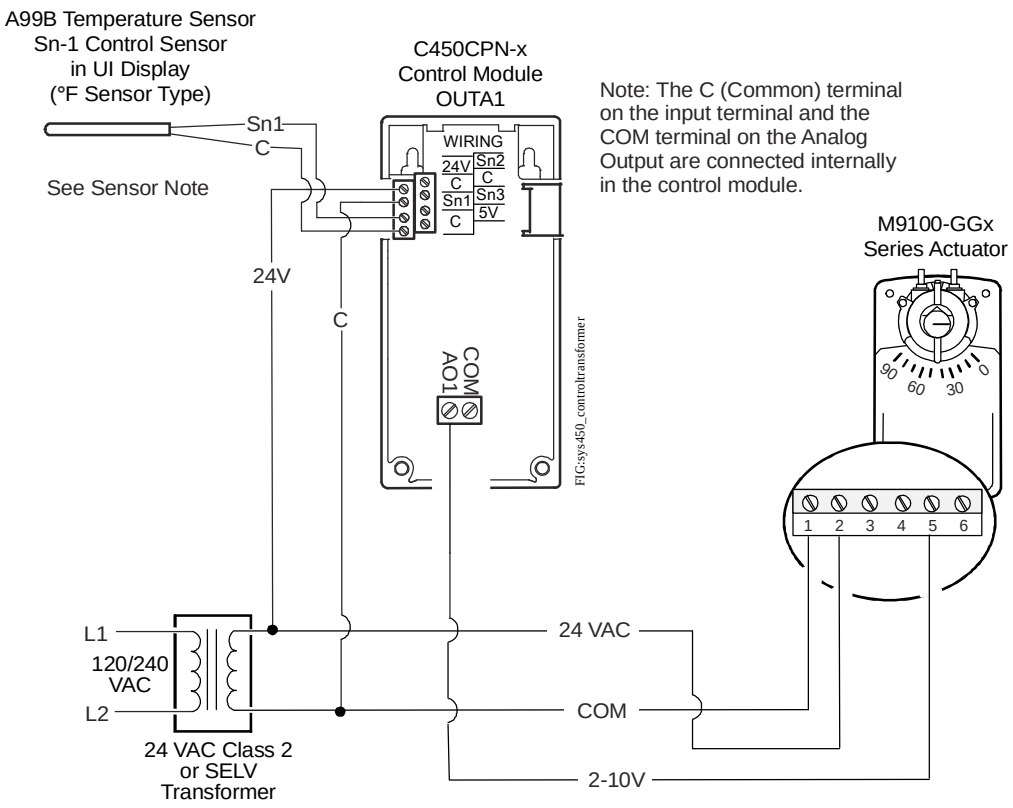

A C450CPN-x Control Module Driving an M9100-GGA or M9100-GGC Actuator, All Powered by an External Transformer

The performance specifications are nominal and conform to acceptable industry standards. For applications at conditions beyond these specifications, consult the local Johnson Controls office. Johnson Controls, Inc. shall not be liable for damages resulting from misapplication or misuse of its products. © 2015 Johnson Controls, Inc.

Proportional Temperature, Pressure, or Humidity Control of an M9100-GGA or M9100-GGC Actuator (Continued)

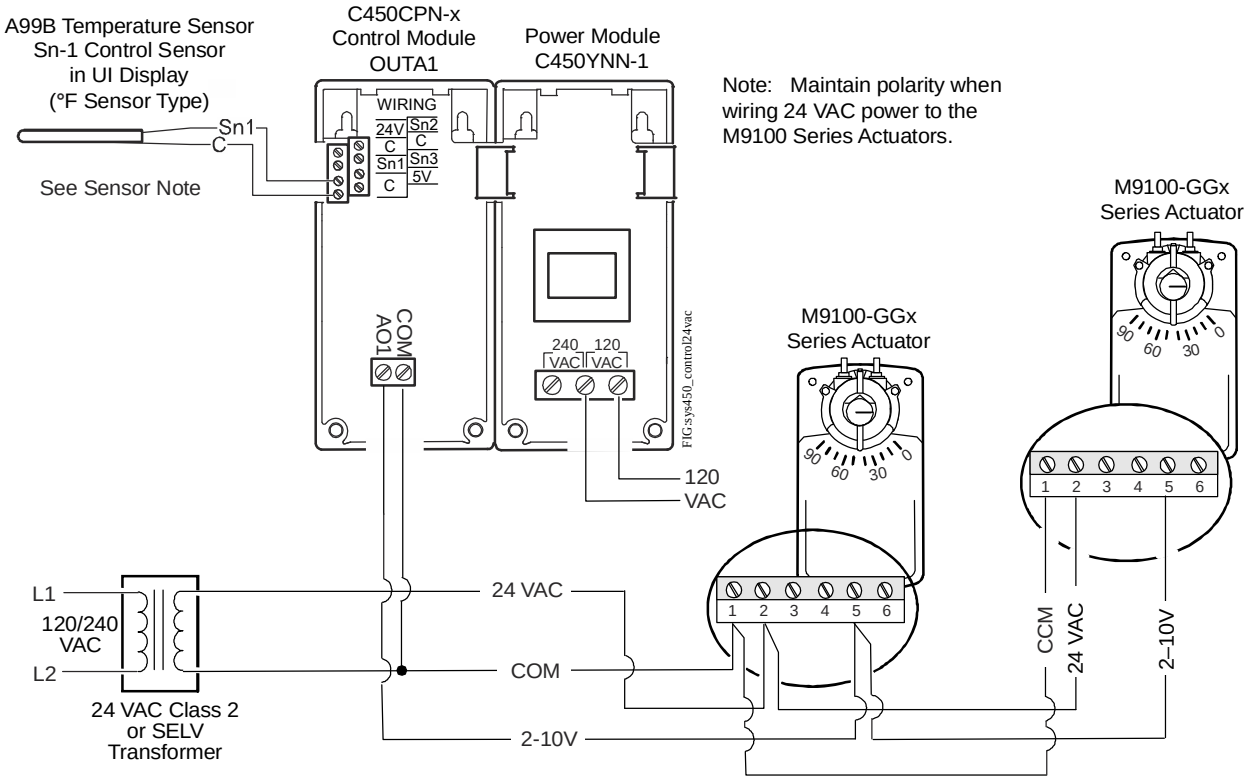

A C450CPN-x Control Module Powered by a C450YNN-1 Power Module Driving Up to Five M9100-GGA or M9100-GGC Actuators Wired in Parallel and Powered by a Dedicated 24 VAC External Transformer

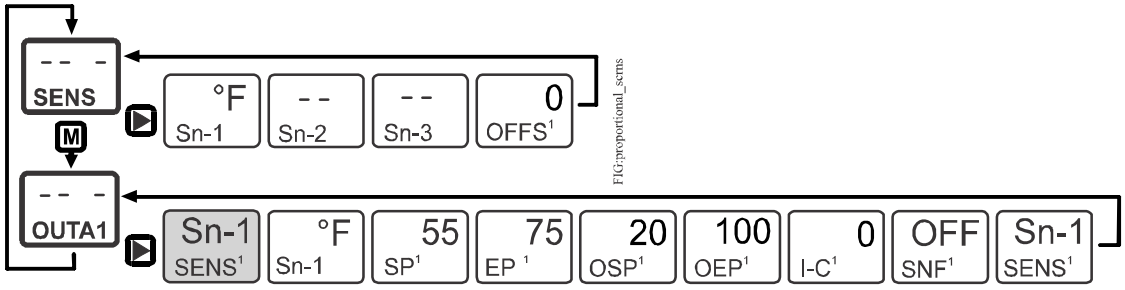

Note: The Sensor Selection screens (in gray) only appear when you first set up each output. After you have selected a sensor for an output, the Sensor Selection screen only appears at the end of the Output Setup screens. If you need to select a different sensor for an output, navigate to the Sensor Edit screen at the end of the Output Setup screens, change the selected sensor, press the right arrow key, and enter the new values for the output.

Main, System, Status, and Setup Screens for the Controlling M9100-GGA or M9100-GGC Actuators Example

The performance specifications are nominal and conform to acceptable industry standards. For applications at conditions beyond these specifications, consult the local Johnson Controls office. Johnson Controls, Inc. shall not be liable for damages resulting from misapplication or misuse of its products. © 2015 Johnson Controls, Inc. **www.johnsoncontrols.com**

Proportional Control of a Barber-Colman® MMR-400 Actuator

IMPORTANT: Use this System 450™ modular control assembly only as an operating control. Where failure or malfunction of the System 450 modular control assembly could lead to personal injury or property damage to the controlled equipment or other property, additional precautions must be designed into the control system. Incorporate and maintain other devices, such as supervisory or alarm systems or safety or limit controls, intended to warn of or protect against failure or malfunction of the System 450 modular control assembly.

Refer to the *System 450 Series Modular Control Systems with Standard Control Modules Technical Bulletin (LIT-12011459)*, the *System 450 Series Modular Controls Product Bulletin (LIT-12011458)*, and the installation instructions for product specifications, detailed installation procedures, and important product safety information.

Note: This application example uses a temperature sensor, but you can control this application based on temperature, pressure, or humidity. Refer to the technical bulletin for more information on selecting and setting up System 450 compatible sensors for your application.

In this System 450 application example, Sn-1 is a °F (Sensor Type) and OUTA1 is an analog output that references the Sn-1 sensor. The Barber-Colman® actuators are set up for a 0 to 10 VDC input signal from the control module, but the actuator can also be set up to respond to a 0 to 20 mA signal from the control module.

In this example, the control module provides 100% signal strength (10 VDC) at temperatures of 75°F and above, and 0% signal strength (0 VDC) at temperatures of 55°F and below. You can use any System 450 compatible sensor and any Setpoint or End Point value within the selected sensor's defined range of values to control this proportional damper application.

Terminal Connections

Actuator Terminal	C450CPN-x	
	Terminal	Description
TR2	C	Common
TR1	24V	24 VAC
16	AO1	Signal VDC
---------- or ----------		
17	AO1	Signal mA

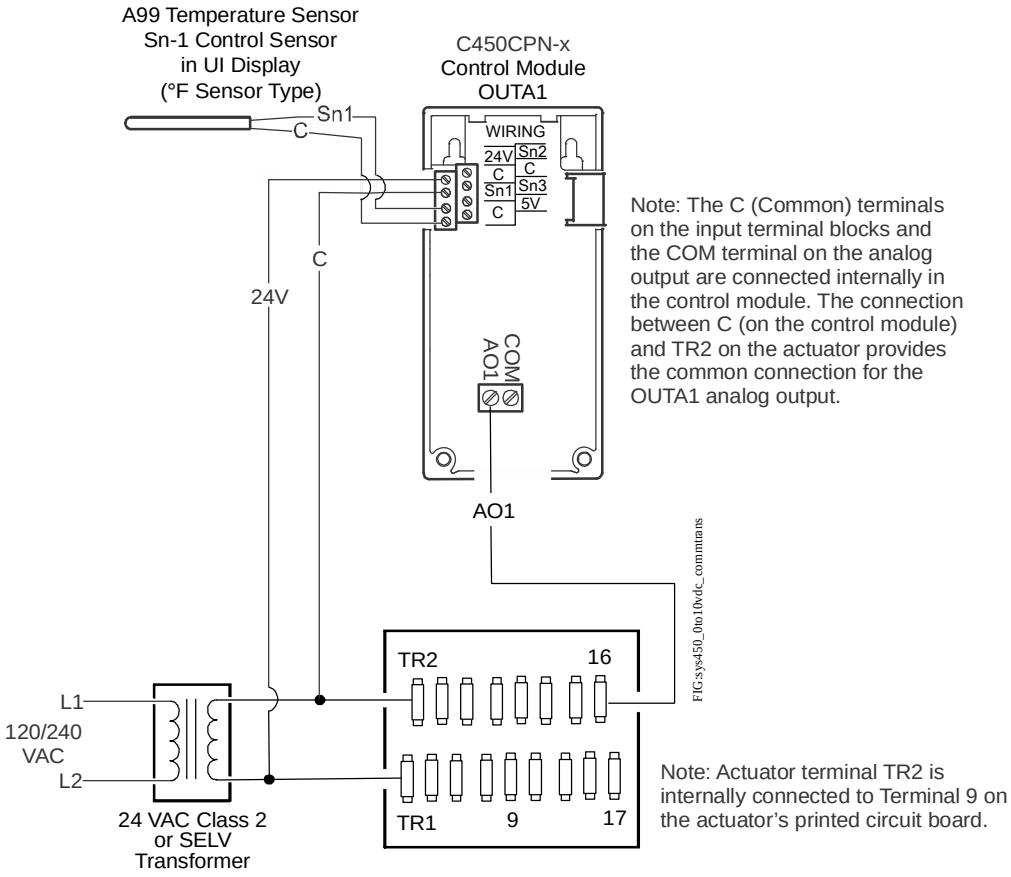

0–10 VDC Application with a Common Transformer

The performance specifications are nominal and conform to acceptable industry standards. For applications at conditions beyond these specifications, consult the local Johnson Controls office. Johnson Controls, Inc. shall not be liable for damages resulting from misapplication or misuse of its products. © 2015 Johnson Controls, Inc. **www.johnsoncontrols.com**

Proportional Control of a Barber-Colman® MMR-400 Actuator (Continued)

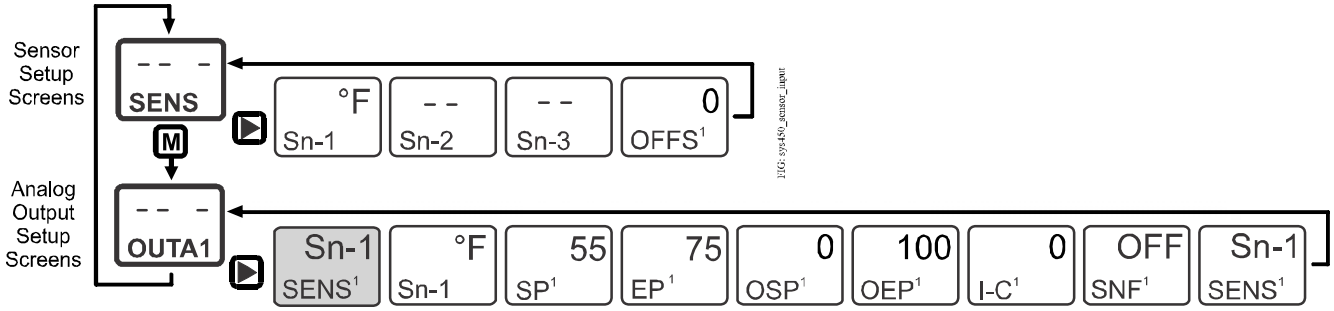

Note: The Sensor Selection screens (in gray) only appear when you first set up each output. After you have selected a sensor for an output, the Sensor Selection screen only appears at the end of the Output Setup screens. If you need to select a different sensor for an output, navigate to the Sensor Edit screen at the end of the Output Setup screens, change the selected sensor, press the right arrow key, and enter the new values for the output.

Main, System, Status, and Setup Screens For the 0–10 VDC Application with a Common Transformer Example

The performance specifications are nominal and conform to acceptable industry standards. For applications at conditions beyond these specifications, consult the local Johnson Controls office. Johnson Controls, Inc. shall not be liable for damages resulting from misapplication or misuse of its products. © 2015 Johnson Controls, Inc.

Two-Stage Cooling Application with Remote Communications Featuring On Delay Time and Analog Output Limiter Control

IMPORTANT: Use the System 450 control module only as an operating control. Where failure or malfunction of the System 450 control module could lead to personal injury or property damage to the controlled equipment or other property, additional precautions must be designed into the control system. Incorporate and maintain other devices, such as supervisory or alarm systems or safety or limit controls, intended to warn of or protect against failure or malfunction of the System 450 control module.

Refer to the *System 450 Series Modular Control Systems with Communications Control Modules (LIT-12011826)*, the *System 450 Series Modular Controls Product Bulletin (LIT-12011458)*, and the installation instructions for product specifications, detailed installation procedures, and important product safety information.

The On Delay and Off Delay Timers (ONd and OFFd) delay the control response before it acts on the sensed value. You can use the delay timers to prevent the control from responding to momentary sensor value changes. ONd and OFFd, in addition to the Minimum On Timer and Minimum Off Timer (ONT and OFFT), can also be used to set up anti-short cycling control for your equipment or to stagger the start of staged equipment.

In this example, a C450CEN-x Control Module controls a two-stage cooling system that includes head pressure control and a high space temperature alarm. The space sensor senses the temperature in the refrigerated space. When the temperature rises, the liquid-line solenoid valve (connected to the OUTR1 output) is energized. As the suction pressure rises, the low-pressure suction transducer senses the rise in pressure, and the first compressor (connected to the OUTR2 output) starts after the on delay time expires. If the suction pressure continues to rise, the second compressor (connected to the OUTR3 output) starts, again after the on delay time expires. The on delay times prevent the compressors from responding immediately to changes in the sensor reading and prevent the compressors from short-cycling.

When the head pressure rises, the high-pressure discharge pressure sensor (Sn-3) senses the rise. This causes the analog output signal OUTA5, which controls the variable-frequency drive (VFD), to increase, which starts the condenser fan at low speed. If the head pressure continues to rise, the control increases the signal, and the condenser fan speed is increased to meet the demand. The output limiter features (UPR and bNd) prevent the VFD from hunting (over-actuating). If the temperature of the refrigerated space exceeds the high temperature alarm value (of 5F° in this example) for a period of time equal to or greater than the time delay, the remote alarm activates.

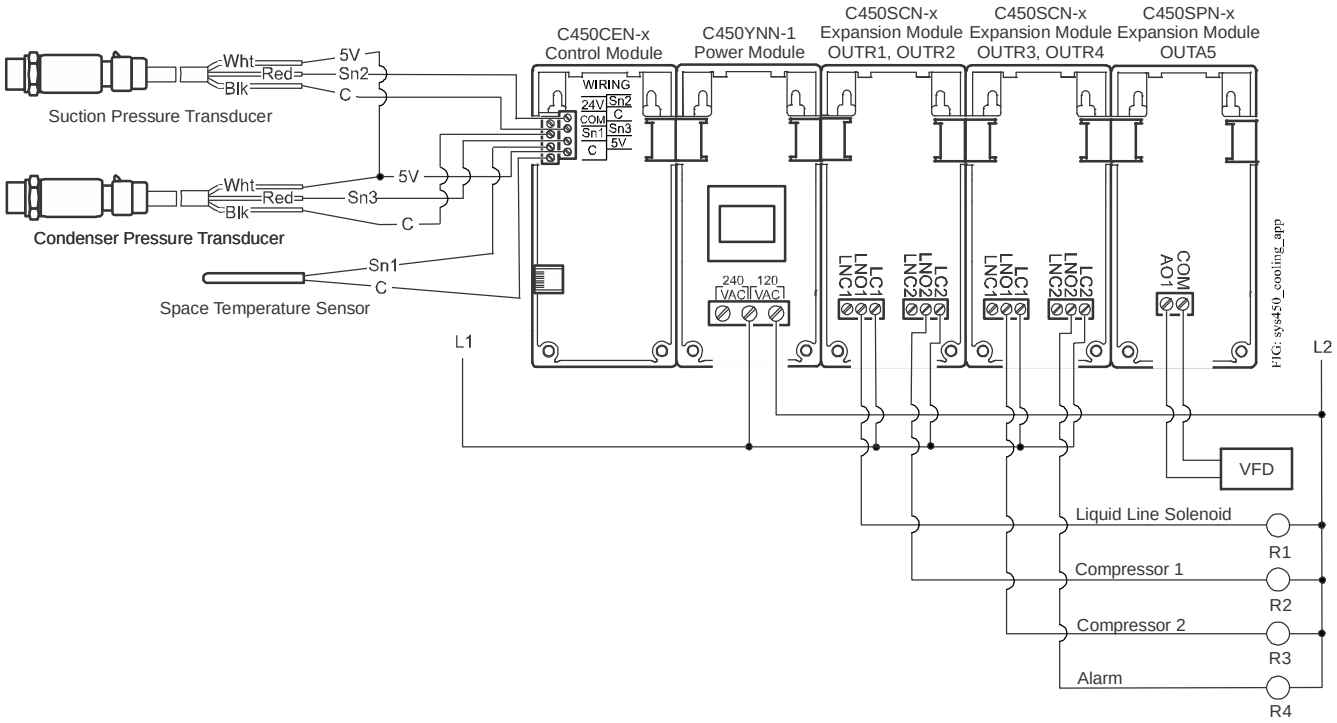

Wiring Diagram for a Two-Stage Cooling Application with Remote Communications Example

The performance specifications are nominal and conform to acceptable industry standards. For applications at conditions beyond these specifications, consult the local Johnson Controls office. Johnson Controls, Inc. shall not be liable for damages resulting from misapplication or misuse of its products. © 2015 Johnson Controls, Inc. **www.johnsoncontrols.com**

Two-Stage Cooling Application with Remote Communications Featuring On Delay Time and Analog Output Limiter Control (Continued)

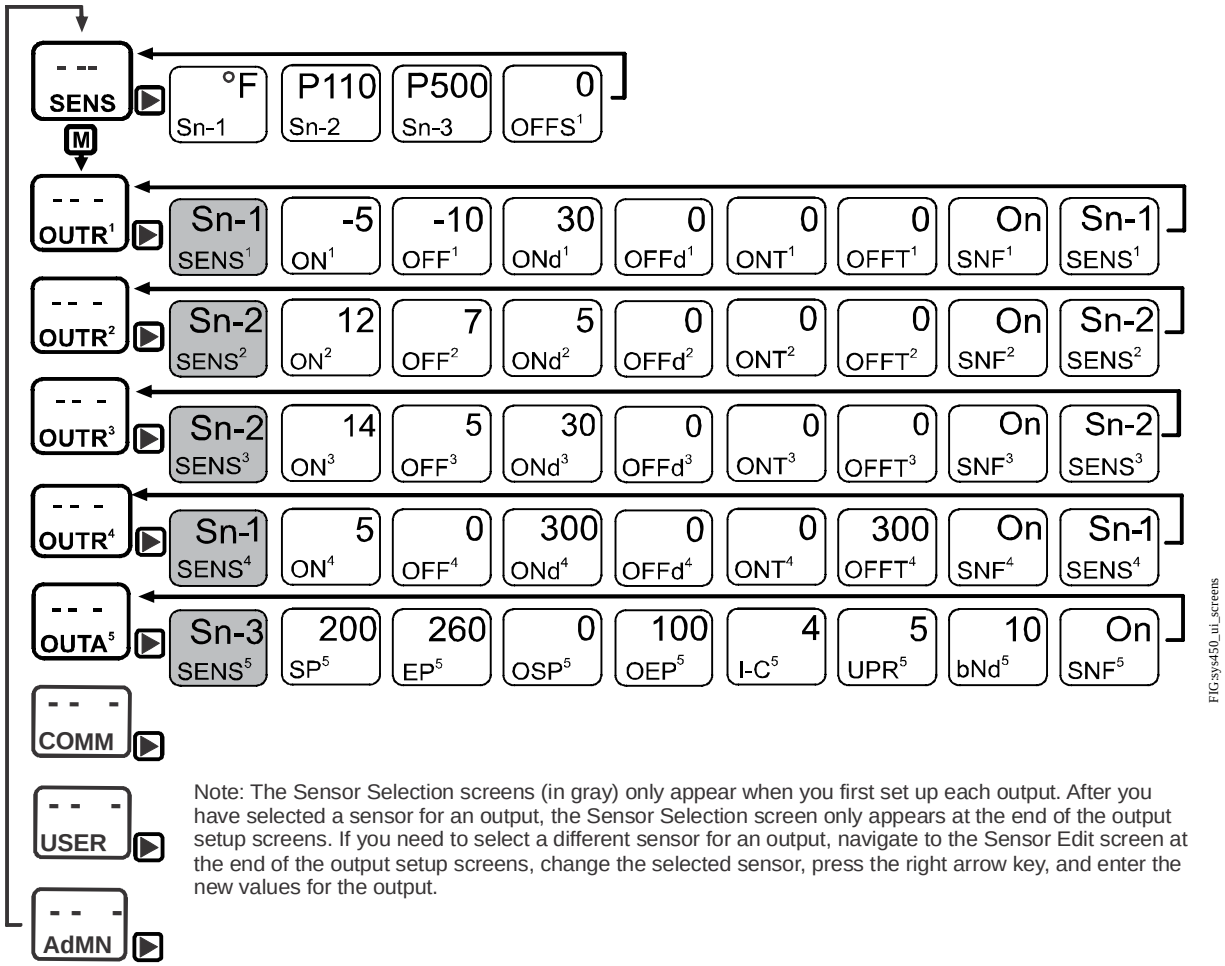

Note: The Sensor Selection screens (in gray) only appear when you first set up each output. After you have selected a sensor for an output, the Sensor Selection screen only appears at the end of the output setup screens. If you need to select a different sensor for an output, navigate to the Sensor Edit screen at the end of the output setup screens, change the selected sensor, press the right arrow key, and enter the new values for the output.

UI Screens for the Two-Stage Cooling Application with Remote Communications Example

The screen captures on the following pages show the web user interface on the C450CEN-x Control Module.

Note: This example is for illustrative purposes only. Conditions may vary depending on the application.

The performance specifications are nominal and conform to acceptable industry standards. For applications at conditions beyond these specifications, consult the local Johnson Controls office. Johnson Controls, Inc. shall not be liable for damages resulting from misapplication or misuse of its products. © 2015 Johnson Controls, Inc.

Two-Stage Cooling Application with Remote Communications Featuring On Delay Time and Analog Output Limiter Control (Continued)

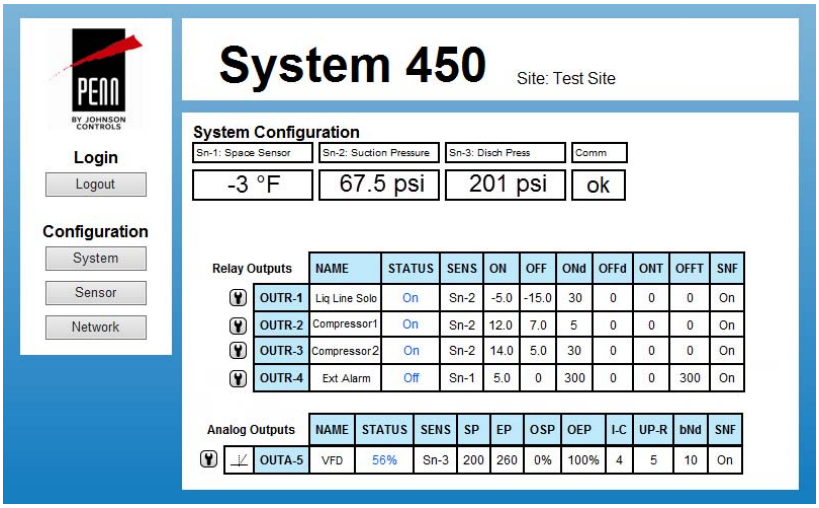

System Configuration Screen

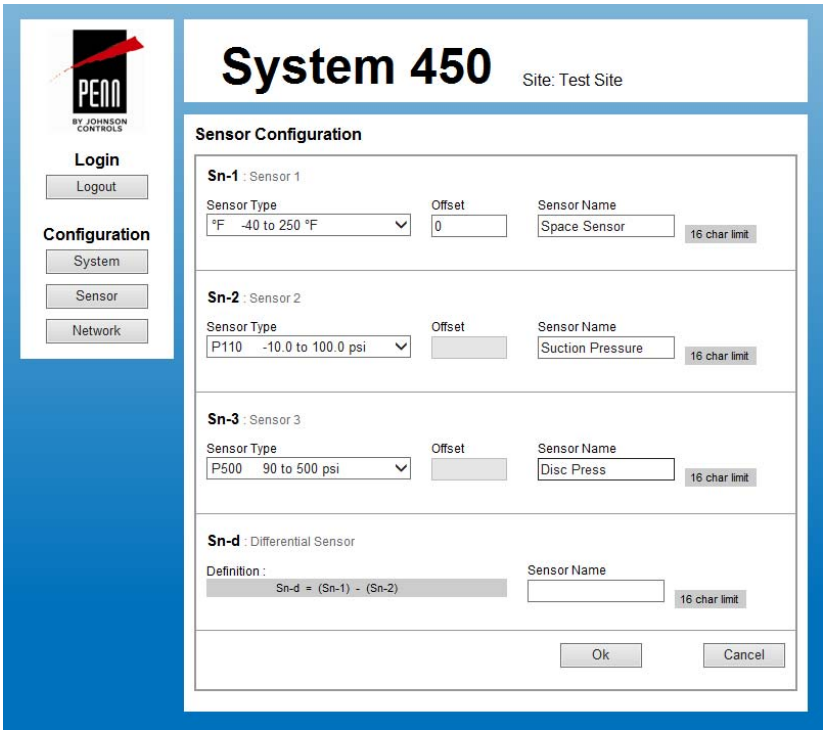

Input (Sensor) Configuration Screen

The performance specifications are nominal and conform to acceptable industry standards. For applications at conditions beyond these specifications, consult the local Johnson Controls office. Johnson Controls, Inc. shall not be liable for damages resulting from misapplication or misuse of its products. © 2015 Johnson Controls, Inc.

Two-Stage Cooling Application with Remote Communications Featuring On Delay Time and Analog Output Limiter Control (Continued)

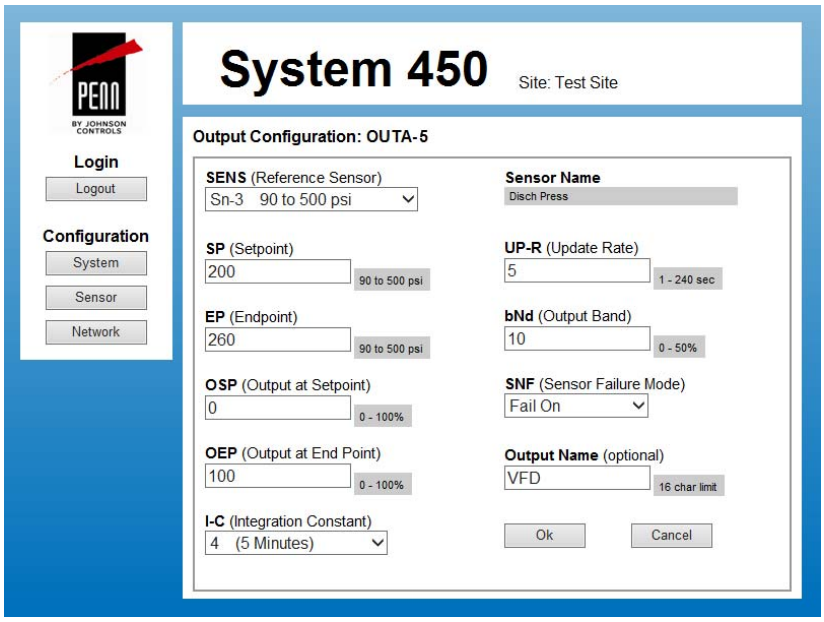

Output Configuration Screen for OUTA5

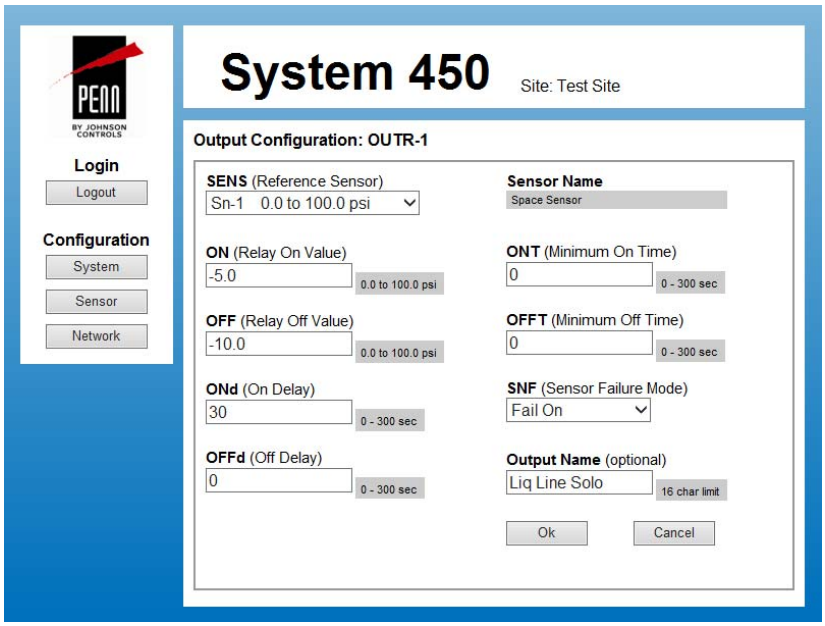

Output Configuration Screen for OUTR1

Note: Refer to the *System 450 Series Control Modules with Communications Technical Bulletin (LIT-12011826)* for information on setting up the network parameters for your Ethernet network.

The performance specifications are nominal and conform to acceptable industry standards. For applications at conditions beyond these specifications, consult the local Johnson Controls office. Johnson Controls, Inc. shall not be liable for damages resulting from misapplication or misuse of its products. © 2015 Johnson Controls, Inc.

Solar Heating Control Applications with Differential Temperature Control

IMPORTANT: Use the System 450™ control module only as an operating control. Where failure or malfunction of the System 450 control module could lead to personal injury or property damage to the controlled equipment or other property, additional precautions must be designed into the control system. Incorporate and maintain other devices, such as supervisory or alarm systems or safety or limit controls, intended to warn of or protect against failure or malfunction of the System 450 control module.

Refer to the *System 450 Series Modular Control Systems with Standard Control Modules Technical Bulletin (LIT-12011459)*, the *System 450 Series Modular Controls Product Bulletin (LIT-12011458)*, and the installation instructions for product specifications, detailed installation procedures, and important product safety information.

In this solar heating example, a solar panel circulating pump is controlled by differential temperature (diFT). When the temperature of the solar panel is 10F° above the temperature of the water in the storage tank, the solar panel circulating pump begins to run.

When the differential temperature (dON[1]) is met, the normally open contacts of relay output 1 close, energizing C2 and starting the circulating pump. The pump cycles off when the differential temperature (dOFF[1]) falls to 5F°. The room temperature circulating pump is controlled by the room temperature sensor (Sn-3) and the storage tank sensor (Sn-2).

When heating is required, the normally open contact on Relay Output 2 (OUTR2) closes, energizing C1 and starting the room temperature circulating pump. Relay Output 3 (OUTR3) locks out the room temperature circulating pump if the water in the tank drops below 70°F, allowing the pump to restart when the water temperature rises to 75°F or higher.

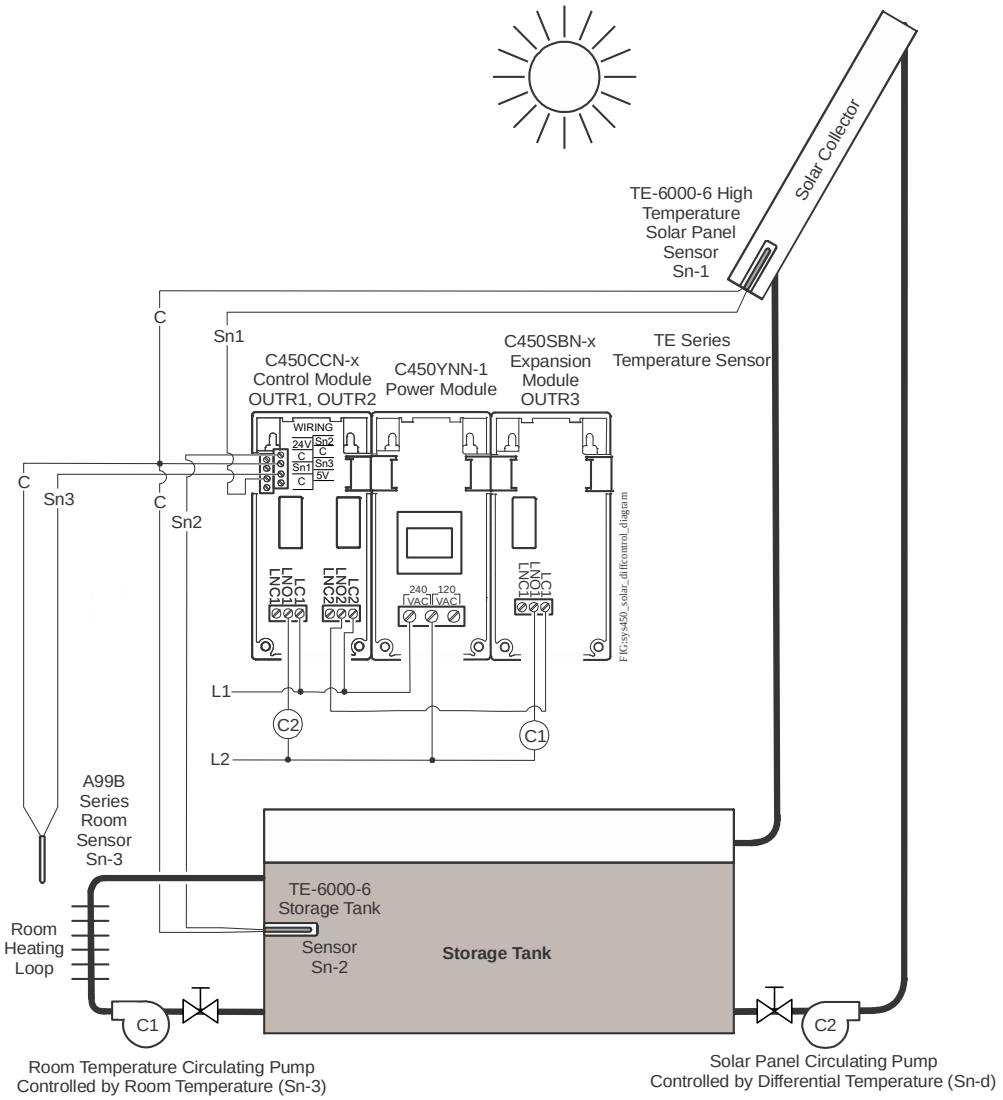

Note: If you require a wall mount sensor for the room sensor, order a TE-68NT-0N00S Wall Mount Sensor with a nickel sensing element. If a TE-68NT-0N00S sensor is used, change the Sn-3 value to HI-F.

System 450 Solar Heating Control Application with Differential Temperature Control Example

The performance specifications are nominal and conform to acceptable industry standards. For applications at conditions beyond these specifications, consult the local Johnson Controls office. Johnson Controls, Inc. shall not be liable for damages resulting from misapplication or misuse of its products. © 2015 Johnson Controls, Inc. **www.johnsoncontrols.com**

Solar Heating Control Applications with Differential Temperature Control (Continued)

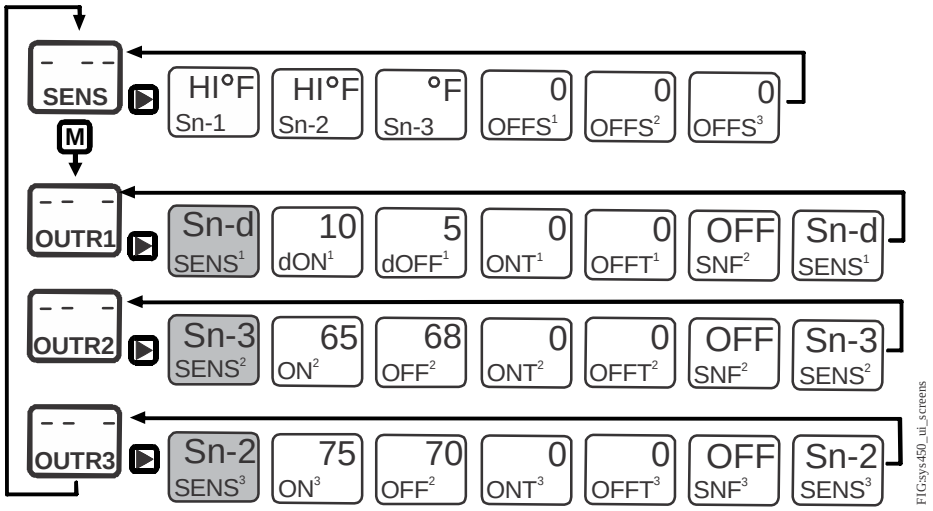

Note: The Sensor Selection screens (in gray) only appear when you first set up each output. After you have selected a sensor for an output, the Sensor Selection screen only appears at the end of the output setup screens. If you need to select a different sensor for an output, navigate to the Sensor Edit screen at the end of the output setup screens, change the selected sensor, press the right arrow key, and enter the new values for the output.

System 450 UI Status and Setup Screens for Solar Heating Control Applications

The performance specifications are nominal and conform to acceptable industry standards. For applications at conditions beyond these specifications, consult the local Johnson Controls office. Johnson Controls, Inc. shall not be liable for damages resulting from misapplication or misuse of its products. © 2015 Johnson Controls, Inc. **www.johnsoncontrols.com**

Floating Control System Powered by an External Transformer to Control an Actuator

IMPORTANT: Use this System 450™ modular control assembly only as an operating control. Where failure or malfunction of the System 450 modular control assembly could lead to personal injury or property damage to the controlled equipment or other property, additional precautions must be designed into the control system. Incorporate and maintain other devices, such as supervisory or alarm systems or safety or limit controls, intended to warn of or protect against failure or malfunction of the System 450 modular control assembly.

Refer to the *System 450 Series Modular Control Systems with Standard Control Modules Technical Bulletin (LIT-12011459)*, the *System 450 Series Modular Controls Product Bulletin (LIT-12011458)*, and the installation instructions for product specifications, detailed installation procedures, and important product safety information.

You can set up a C450CCN-x Control Module using any compatible sensor to provide floating control (of an actuator motor or other device) with a deadband. The following diagrams illustrate how to set up an actuator for floating control using a C450CCN-x Control Module, an external transformer, and a temperature sensor.

Note: You can control this application based on temperature, pressure, or humidity. Refer to the technical bulletin for more information on selecting and setting up System 450 compatible sensors for your application.

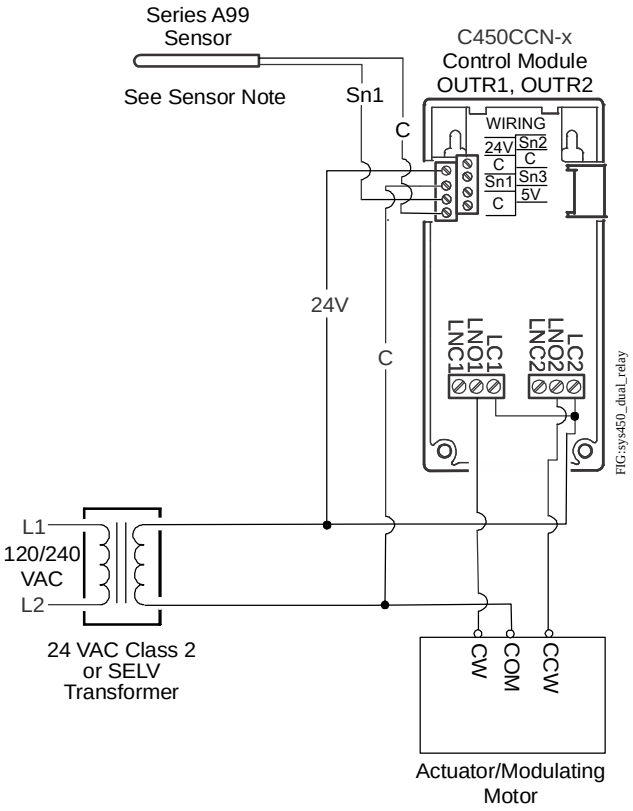

Wiring a C450CCN-x Control Module Using Any Compatible Temperature Sensor for Floating Control Applications

The performance specifications are nominal and conform to acceptable industry standards. For applications at conditions beyond these specifications, consult the local Johnson Controls office. Johnson Controls, Inc. shall not be liable for damages resulting from misapplication or misuse of its products. © 2015 Johnson Controls, Inc. **www.johnsoncontrols.com**

Floating Control System Powered by an External Transformer to Control an Actuator (Continued)

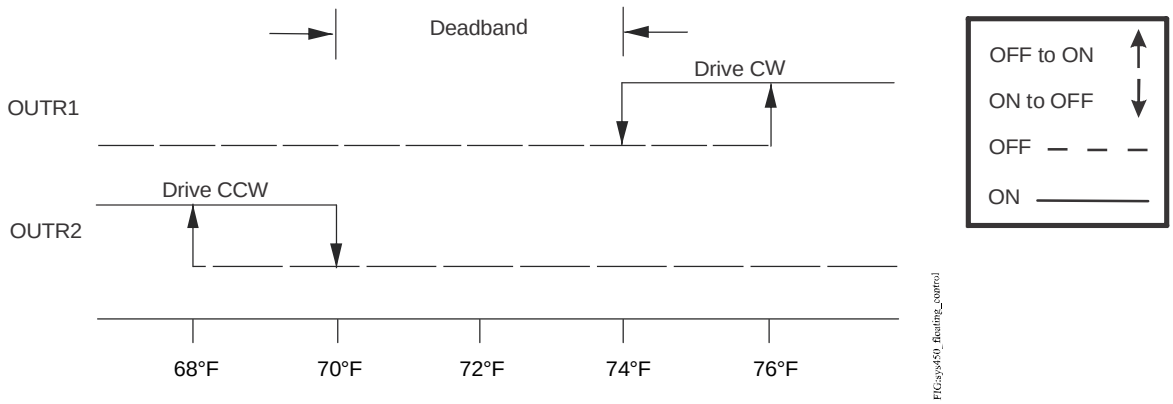

Note: This graph represents a temperature example, but you can use a pressure or humidity sensor instead.

Floating Control Diagram

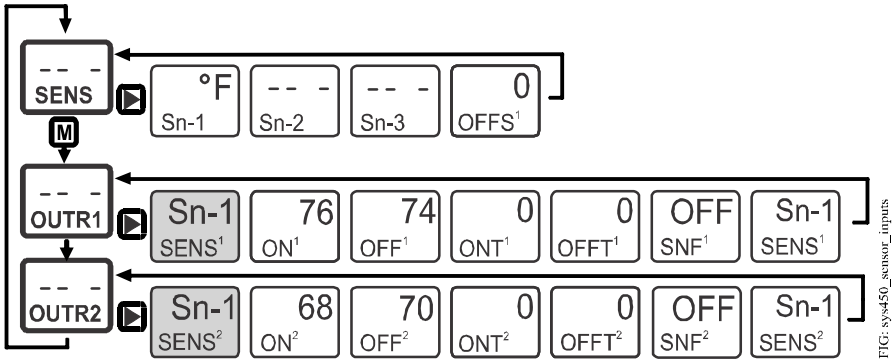

Note: The Sensor Selection screens (in gray) only appear when you first set up each output. After you have selected a sensor for an output, the Sensor Selection screen only appears at the end of the Output Setup screens. If you need to select a different sensor for an output, navigate to the Sensor Edit screen at the end of the Output Setup screens, change the selected sensor, press the right arrow key, and enter the new values for the output.

Main, System, Status, and Setup Screens For the Floating Control Application Example That Controls Temperature

The performance specifications are nominal and conform to acceptable industry standards. For applications at conditions beyond these specifications, consult the local Johnson Controls office. Johnson Controls, Inc. shall not be liable for damages resulting from misapplication or misuse of its products. © 2015 Johnson Controls, Inc.

Head Pressure Control - Water Source Heat Pump with Analog Output Limiter Control

IMPORTANT: Use the System 450™ control module only as an operating control. Where failure or malfunction of the System 450 control module could lead to personal injury or property damage to the controlled equipment or other property, additional precautions must be designed into the control system. Incorporate and maintain other devices, such as supervisory or alarm systems or safety or limit controls, intended to warn of or protect against failure or malfunction of the System 450 control module.

Refer to the *System 450 Series Modular Control Systems with Communications Control Modules (LIT-12011826)*, the *System 450 Series Modular Controls Product Bulletin (LIT-12011458)*, and the installation instructions for product specifications, detailed installation procedures, and important product safety information.

In this example, the C450CEN-x Control Module controls head pressure on a water source heat pump for both heating and cooling. In this type of application, the head pressure is typically lower when the heat pump is operating in heating mode, and the pressure is higher when operating in cooling mode. AO1 is controlling the head pressure in the heating mode and AO2 is controlling the head pressure in the cooling mode. The analog output limiter function prevents the valve from excessive modulating.

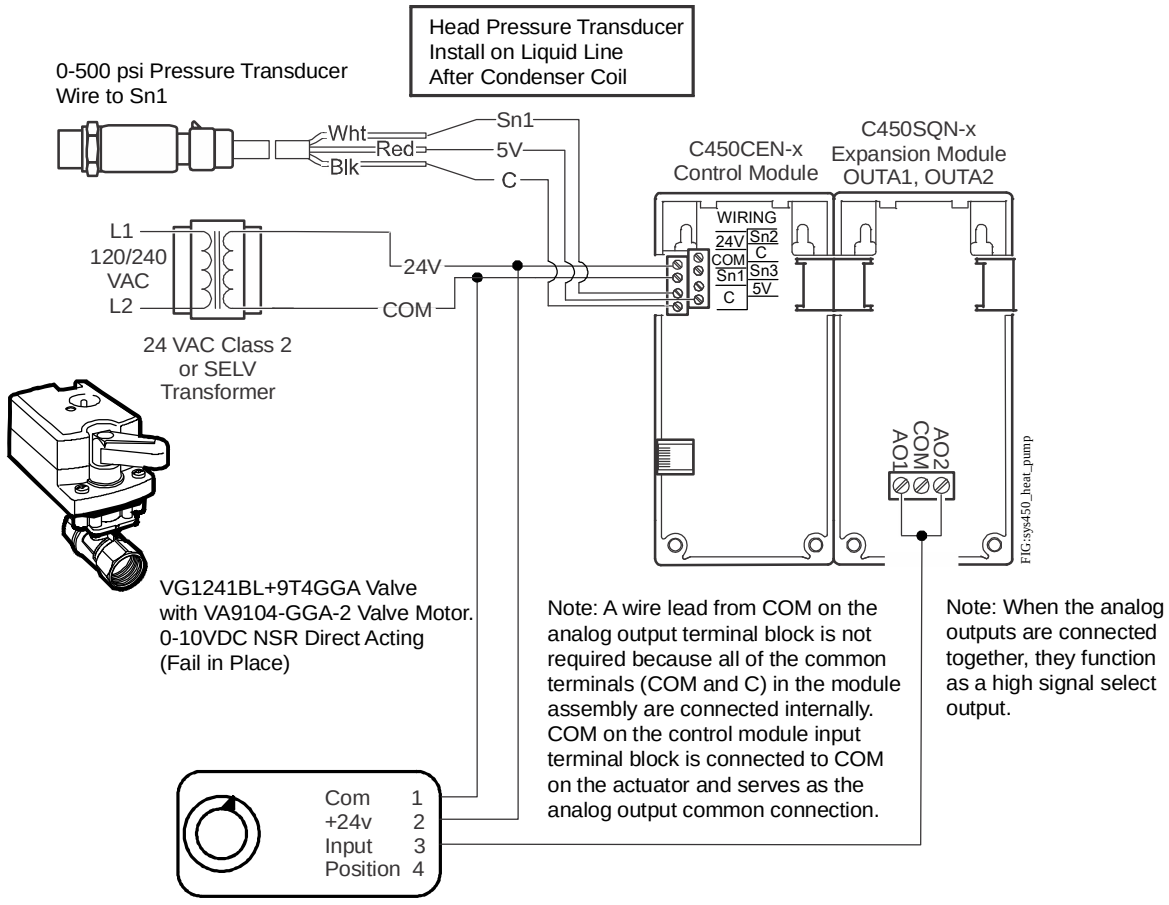

Controlling Head Pressure on a Water Source Heat Pump for both Heating and Cooling

The performance specifications are nominal and conform to acceptable industry standards. For applications at conditions beyond these specifications, consult the local Johnson Controls office. Johnson Controls, Inc. shall not be liable for damages resulting from misapplication or misuse of its products. © 2015 Johnson Controls, Inc. **www.johnsoncontrols.com**

Head Pressure Control - Water Source Heat Pump with Analog Output Limiter Control (Continued)

In this example, the sensor input Sn-1 is set to P500 (with a range from 0 to 500 psi). The Sn-2 and Sn-3 inputs are not used.

The sensor outputs AO1 and AO2 on the C450SQN-x Expansion Module are configured as separate control feedback loops, but both use Sn1 as the input sensor and both control the valve actuator motor.

OUTA1 is used for heating mode (lower head pressure operating range), and OUTA2 is used for cooling mode (higher head pressure operating range).

The update rate and output deadband settings are used to minimize changes to the valve position. These parameters form the analog output limiter.

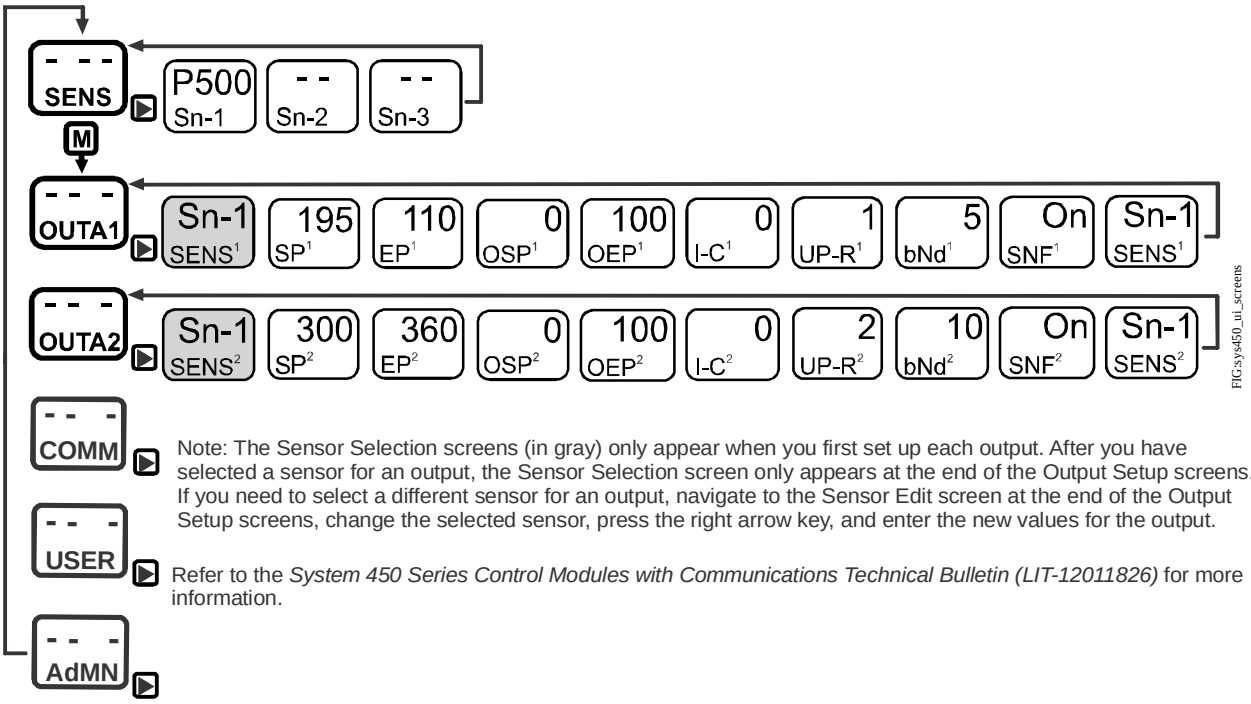

Note: The Sensor Selection screens (in gray) only appear when you first set up each output. After you have selected a sensor for an output, the Sensor Selection screen only appears at the end of the Output Setup screens. If you need to select a different sensor for an output, navigate to the Sensor Edit screen at the end of the Output Setup screens, change the selected sensor, press the right arrow key, and enter the new values for the output.

Refer to the *System 450 Series Control Modules with Communications Technical Bulletin (LIT-12011826)* for more information.

Example Status and UI Setup Screens for Controlling Head Pressure on a Water Source Heat Pump for Both Heating and Cooling

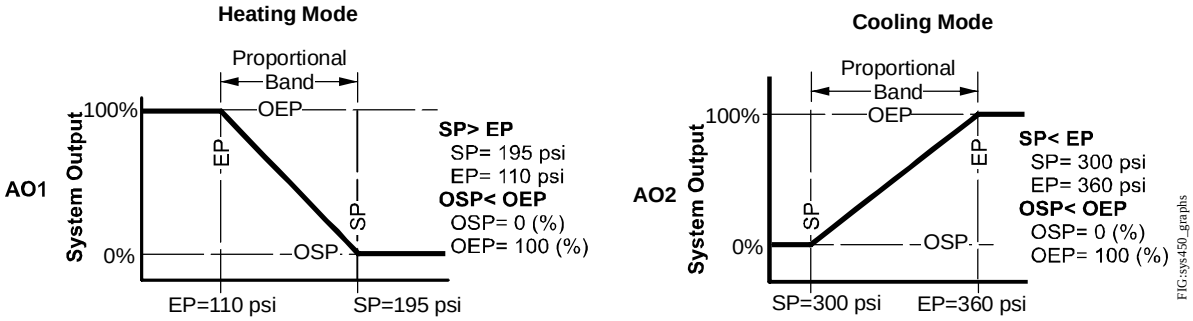

System Output Diagrams Showing Heating and Cooling Modes for the Head Pressure Control Example

The screen captures on the following pages show the web user interface on the C450CEN-x Control Module.

Note: This example is for illustrative purposes only. Conditions may vary using different applications.

The performance specifications are nominal and conform to acceptable industry standards. For applications at conditions beyond these specifications, consult the local Johnson Controls office. Johnson Controls, Inc. shall not be liable for damages resulting from misapplication or misuse of its products. © 2015 Johnson Controls, Inc. **www.johnsoncontrols.com**

Head Pressure Control - Water Source Heat Pump with Analog Output Limiter Control (Continued)

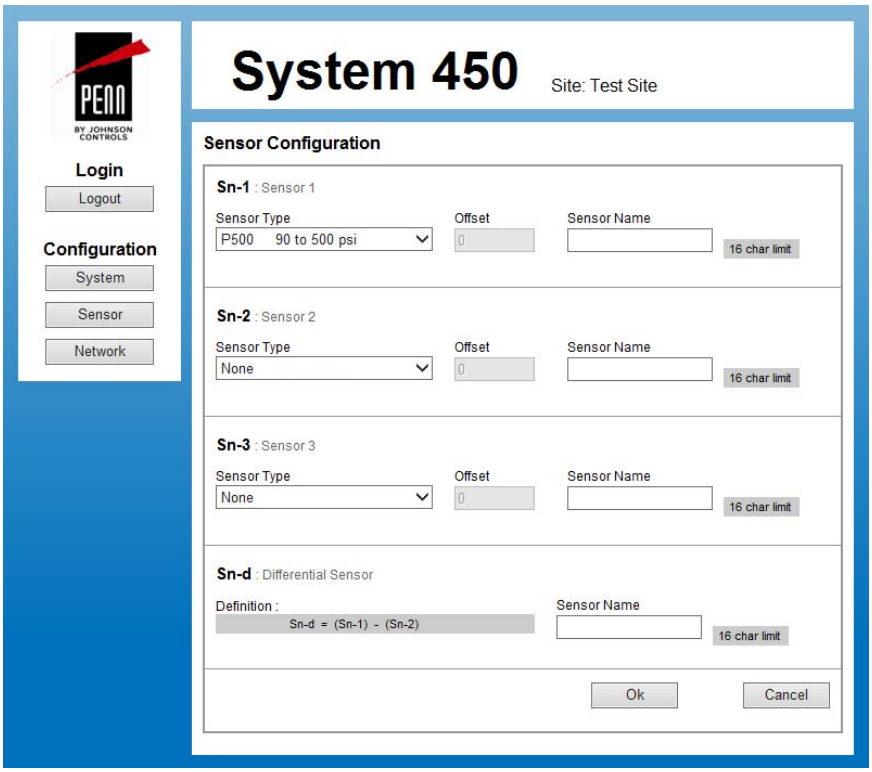

Sensor Configuration Screen

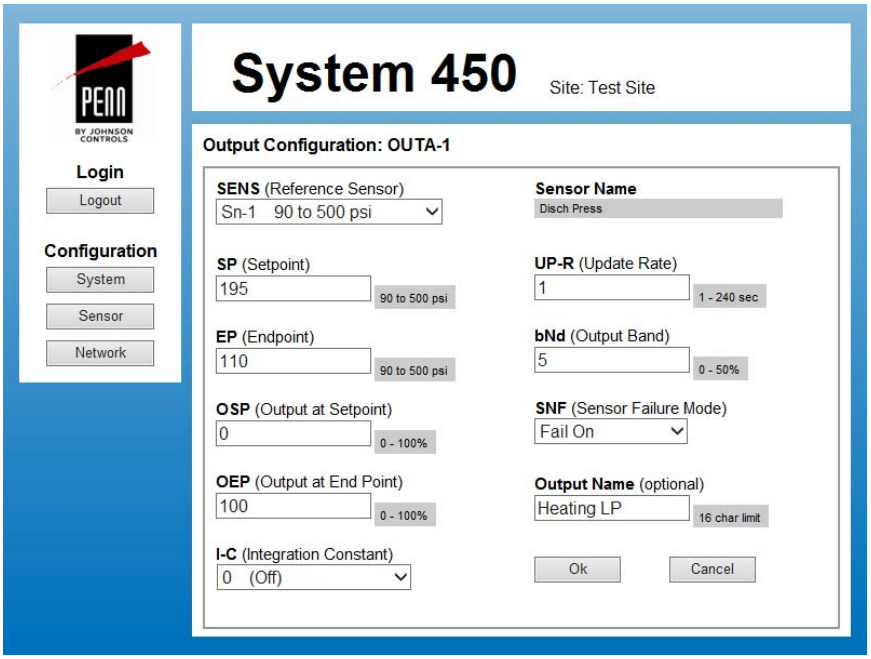

OUTA-1 Configuration Screen

The performance specifications are nominal and conform to acceptable industry standards. For applications at conditions beyond these specifications, consult the local Johnson Controls office. Johnson Controls, Inc. shall not be liable for damages resulting from misapplication or misuse of its products. © 2015 Johnson Controls, Inc.

Head Pressure Control - Water Source Heat Pump with Analog Output Limiter Control (Continued)

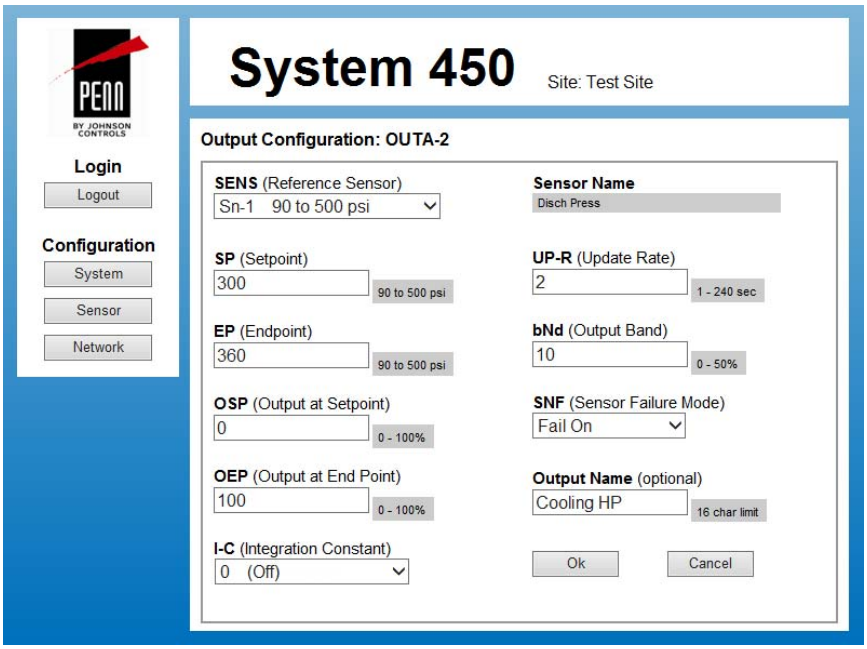

OUTA-2 Configuration Screen

Note: Refer to the *System 450 Series Control Modules with Communications Technical Bulletin (LIT-12011826)* for information on setting up the network parameters for your Ethernet network.

The performance specifications are nominal and conform to acceptable industry standards. For applications at conditions beyond these specifications, consult the local Johnson Controls office. Johnson Controls, Inc. shall not be liable for damages resulting from misapplication or misuse of its products. © 2015 Johnson Controls, Inc. **www.johnsoncontrols.com**

Extending A99 Sensor Cables

IMPORTANT: The A99 temperature sensor is intended to provide an input to equipment under normal operating conditions. Where failure or malfunction of the A99 temperature sensor could lead to personal injury or property damage to the controlled equipment or other property, additional precautions must be designed into the control system. Incorporate and maintain other devices, such as supervisory or alarm systems or safety or limit controls, intended to warn of or protect against failure or malfunction of the A99 temperature sensor.

Note: Use shielded wire when you install the sensor more than 50 feet (15.25 meters) from the controller.

IMPORTANT: When connecting an A99 temperature sensor with shielded cable to an electronic controller, connect the cable shield drain lead to a low-voltage common terminal on the input sensor terminal block. Do not connect the shield at any other point along the cable. Isolate and insulate the shield drain at the sensor end of the cable. Connecting a cable shield at more than one point can enable transient currents to flow through the sensor cable shield, which can cause erratic control operation.

When the A99x Sensor is installed more than 50 feet (15.25 meters) from the controller, the resistance of the wire in the cable can create a significant deviation to the sensor reading. Use the following procedure to compensate for the deviation.

Refer to the *System 450 Series Modular Controls Product Bulletin (LIT-12011458)*, the *A99B Series Temperature Sensors Product/ Technical Bulletin (LIT-125186)*, and the installation instructions for product specifications, detailed installation procedures, and important product safety information.

1. Use one of the following formulas to calculate the total wire resistance (error):
   a. Total wire resistance (ohms) = 2 x (Length of wire cable in meters) x (Resistance in ohms/meter)
   b. Total wire resistance (ohms) = 2 x (Length of wire cable in feet) x (Resistance in ohms/foot)

Ohm Resistance of Typical Stranded Copper Wire

Wire Size		Cross Section Area	Resistance	
American Wire Gauge (AWG)	Metric (mm)	Circular mils	Ohm/foot	Ohm/meter
26		254	.0418	.137
24		404	.0262	.0859
22		642	.0165	.054
	.50	987	.0107	.0352
20		1,022	.0104	.034
	.75	1,480	.0071	.0234
18		1,624	.0065	.0214
	1.0	1,974	.0054	.0176

2. Determine the approximate temperature control point of the remote-mounted A99 Sensor, and then use that °F or °C temperature in one of the following formulas to determine the ohms/degree at that temperature:
   • Ohms/°C = (0.0339 x °C) + 6.78
   • Ohms/°F = (0.01045 x °F) + 3.42
3. Calculate the wire resistance error in °F or °C:
   Error = (ohm wire resistance error)/(ohms/degree value at control point)

Metric Example

If the A99 Sensor used for Sn-1 and Sn-2 inputs is installed 50 meters (164 feet) from the C450 control using 0.5 mm wire, the total wire resistance (error) is:

2 x 50 x 0.0352 = 3.52 ohms

Then, if the A99 Sensor controls a process at 25°C, the ohms/°C is:

(0.0339 x 25) + 6.78 = 7.63 ohms/°C

Therefore, the error is:

3.52/7.63 = 0.46°C

So, the C450 control sensor inputs for Sn-1 and Sn-2 should be offset by -0.5°C.

English Example

If the A99 Sensor used for Sn-1 and Sn-2 inputs is installed 300 feet (91.44 meters) from the C450 control using 18 AWG wire, the total wire resistance (error) is:

2 x 300 x 0.0065 = 3.9 ohms

Then, if the A99 Sensor controls a process at 70°F, the ohms/°F is:

(0.01045 x 70) + 3.42 = 4.15 ohms/°F

Therefore, the error is:

3.9/4.15 = 0.94°F

So, the C450 control sensor inputs for Sn-1 and Sn-2 should be offset by -1°F.

The following diagram illustrates how to enter this offset in the C450 Sensor Setup screen.

The performance specifications are nominal and conform to acceptable industry standards. For applications at conditions beyond these specifications, consult the local Johnson Controls office. Johnson Controls, Inc. shall not be liable for damages resulting from misapplication or misuse of its products. © 2015 Johnson Controls, Inc. **www.johnsoncontrols.com**

Extending A99 Sensor Cables (Continued)

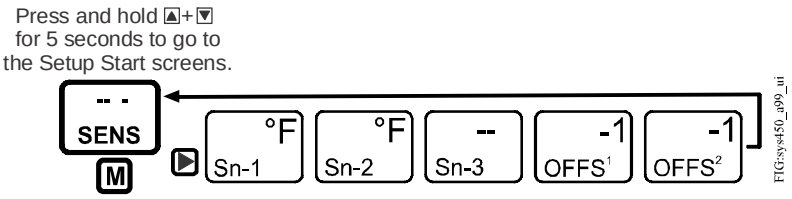

Setting Up Sensor Temperature Offsets in the System 450 UI

The performance specifications are nominal and conform to acceptable industry standards. For applications at conditions beyond these specifications, consult the local Johnson Controls office. Johnson Controls, Inc. shall not be liable for damages resulting from misapplication or misuse of its products. © 2015 Johnson Controls, Inc.

NOTES

NOTES

Johnson Controls offers a broad line of innovative, high-performing and energy-saving HVAC and refrigeration controls

REFRIGERATION CONTROLS



VARIABLE SPEED DRIVES



VALVES



ACTUATORS



SENSORS & THERMOSTATS



HVAC CONTROL PANEL PRODUCTS



DAMPERS, LOUVERS & AIR MEASURING PRODUCTS



PNEUMATICS



PENN
BY JOHNSON CONTROLS





We are in the business of building efficiency. We create buildings and environments that help people achieve and enterprises succeed. We do that by delivering energy savings. Operational savings. And sustainable solutions. In fact, PENN commercial refrigeration controls by Johnson Controls have been serving the cooling needs of millions of customers for the past 95 years.









For more information, or to purchase Johnson Controls products, call 1-800-275-5676 or 1-800-482-2778.

Printed on recycled paper.

Johnson Controls, the Johnson Controls logo and the PENN by Johnson Controls logo are registered trademarks of Johnson Controls, Inc. in the United States of America and other countries. Other trademarks used herein may be trademarks or registered trademarks of other companies.

© 2015 Johnson Controls, Inc. P.O. Box 423, Milwaukee, WI 53201 Printed in USA PUBL-7644
www.johnsoncontrols.com

PENN
BY JOHNSON CONTROLS