ECM Current Switch Product Bulletin

LIT-12014080

2023-02-02

Description

Use the ECM Current Switch for go/no-go run detection on electrically commutated motors (ECMs) . ECMs draw a small amount of AC standby current to power their inverter, up to 1 A, even when the motor is idle. The ECM features a high resolution adjustable turn-on setpoint to ignore standby current and prevent false ON status indications.

Split core

Figure 1: CSDECM-ADJ0 ECM Current Switch



- Dimensions, H x W x D: 2.5 in. x 2.23 in. x 0.82 in. (5.67 cm x 6.35 cm x 1.45 cm) without relay or 2.5 in. x 2.23 in. x 1.4 in. (5.67 cm x 6.35 cm x 3.56 cm) with relay
- Mount the sensor without removal of the conductor for installation savings
- Clamp on conductor with aperture, or use detachable base to screw or DIN mount
- Larger 0.75 in. (1.9 cm) aperture accommodates oversize conductors

Optional relay

Figure 2: Optional relay



- Dimensions, H x W x D: 0.84 in. x 2.06 in. x 0.72 in. (2.13 cm x 5.23 cm x 1.83 cm)
- Add to the CSDECM series or order CSDECM-ADJ1-4 to get start or stop status in a single device
- Reduces the number of installed components to save time and space
- Removable relay facilitates service

Features

Reliable operation on ECM motors:

- Set the trip point with an easily-scaled dial so that the sensor only turns on when the motor is running
- Very low turn-on adjustment scale:
- Maintenance-free, no call backs

Setpoint operation

The new ECM sensor includes an adjustable ON setpoint easily adjusted to ignore any ECM stand-by current, eliminating call backs due to false ON status indications.

- No hazardous guesswork. You do not need to perform multi-turn adjustments.
- Reduce the risk of arc flash. You can pre-set the sensor without calibration in live enclosure.
- Continuous sweep dial enables fine-tuning of the setpoint

Figure 3: ECM sensor output

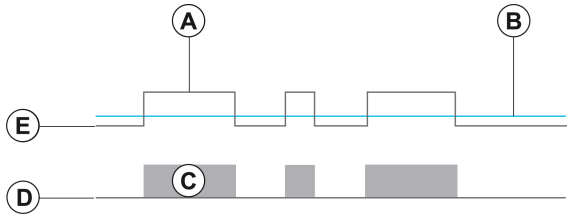

Callout	Description
A	ECM monitored load
B	ECM sensor setpoint, adjustable to prevent detection of standby current
C	Energized
D	Sensor output
E	Unloaded ECM inverter, for example 120 mA

The ECM output changes state whenenver current above the minimum turn-on is present. This provides the go/no-go status on ECMs without false trips due to the inactive inverter current.

Ordering information

See the following tables for ordering information.

Table 1: Split core ordering information

Product code	Min ON adjustment	Max A	N.O. output	Open LED	Closed LED	Relay
CSDECM-ADJ0	0.25 A	200 A	1.0 A @ 30 VAC/ VDC	X	X	None
CSDECM-ADJ1				X	X	CRCSDP-NO-24
CSDECM-ADJ2				X	X	CRCSDP-NC-24
CSDECM-ADJ3				X	X	CRCSDP-NO-12
CSDECM-ADJ4				X	X	CRCSDP-NC-12

Note: Sensor power is induced for all models.

Table 2: Command relay ordering information

Product code	Contact rating	Coil
CRCSDP-NO-24	N.O. 10 A @ 125 VAC	24 VAC/VDC 15 mA nom.
CRCSDP-NC-24	N.C. 10 A @ 125 VAC	24 VAC/VDC 15 mA nom.
CRCSDP-NO-12	N.O. 10 A @ 125 VAC	9 VDC to 12 VDC 30 mA nom.
CRCSDP-NC-12	N.C. 10 A @ 125 VAC	9 VDC to 12 VDC 30 mA nom.

WARNING

Refer to the *CSDECM-ADJ Series ECM Adjustable Current Switch Installation Guide (LIT-12013530)* that accompanies the product and heed all safety instructions. Do not rely on the current status LED to indicate presence of power.

Wiring

The following figure shows the wiring setup.

Note: The device is not polarity sensitive.

Figure 4: Wiring

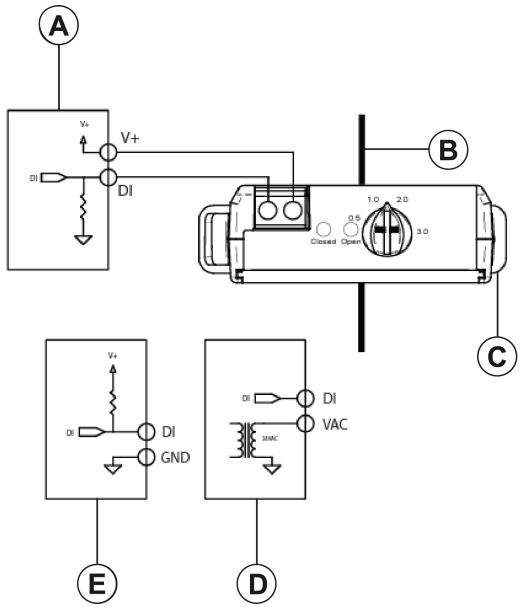

Callout	Description
A	Controller (sinking)
B	Insulated primary AC conductor 600 VAC max
C	Set the knob to the required turn-on
D	Alternate controller arrangement (AC)
E	Alternate controller arrangement (sourcing)

Figure 5: Wire wrap for smaller motors and loads

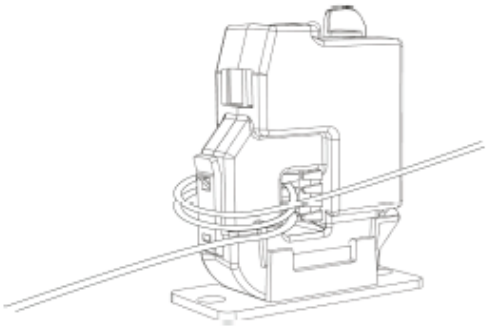

Note: A small load is a load that is outside of the measurement range.

Technical specifications

Table 3: ECM Current Switch technical specifications

Specification	Description	
Current range	Dial setting 0.25 A to 3 A, 200 A max operational	
Sensor output rating	1.0 A @ 30 VAC/VDC	
Sensor output type	N.O. 10 A @ 125 VAC, solid-state FET	
Temperature rating	5°F to 140°F (-15°C to 60°C)	
Insulation class	600V RMS. For use on insulated conductors only. Use minimum 167°F (75°C) insulated conductor.	
Sensor power	Induced	
Frequency range	50/60 Hz	
Dimensions	Height: 2.5 in. (6.35 cm) height without knob, 2.75 in. (7 cm) with knob Width: 2.23 in. (5.67 cm) Depth: 0.82 in. (2.08 cm), 1.4 in. (3.6 cm) on the optional relay model	
Sensor aperture	0.75 in. (1.9 cm)	
Compliance	United States	UL Listed, File NMTR.E493157, CCN 3PZS, Power Circuit and Motor-mounted Apparatus, Under UL 60730-1, Energy Management Equipment
	Canada	cUL Listed, File NMTR.E493157, CCN 3PZS, Power Circuit and Motor-mounted Apparatus, Under CAN/CSA E60730-1, Signal Equipment
CE	Europe	CE Mark – Johnson Controls declares that this product is in compliance with the essential requirements and other relevant provisions of the EMC Directive and RoHS Directive.

Table 4: Command relay technical specifications

Description	Specification	
Coil	CRCSDP-NC-12	9 VDC to 12 VDC, 30 mA nominal
	CRCSDP-NC-24	24 VAC/VDC, 30 mA nominal
	CRCSDP-NO-12	9 VDC to 12 VDC, 30 mA nominal
	CRCSDP-NO-24	24 VAC/VDC, 15 mA nominal
Contact arrangement	CRCSDP-NC-12	N.C. (1 form B)
	CRCSDP-NC-24	
	CRCSDP-NO-12	N.O. (1 form A)
	CRCSDP-NO-24	
Contact rating	10 A @ 125 VAC, UL C300 rated	

Note:

- The maximum surrounding ambient air temperature is 140°F (60°C)
- For use in a Pollution Degree 2 environment

The performance specifications are nominal and conform to acceptable industry standard. For application at conditions beyond these specifications, consult the local Johnson Controls office. Johnson Controls shall not be liable for damages resulting from misapplication or misuse of its products.

Product warranty

This product is covered by a limited warranty, details of which can be found at www.johnsoncontrols.com/buildingswarranty.

Software terms

Use of the software that is in (or constitutes) this product, or access to the cloud, or hosted services applicable to this product, if any, is subject to applicable end-user license, open-source software information, and other terms set forth at www.johnsoncontrols.com/techterms. Your use of this product constitutes an agreement to such terms.

Patents

Patents: https://jcipat.com

Single point of contact

APAC	EU	UK	NA/SA
JOHNSON CONTROLS C/O CONTROLS PRODUCT MANAGEMENT NO. 32 CHANGJIANG RD NEW DISTRICT WUXI JIANGSU PROVINCE 214028 CHINA	JOHNSON CONTROLS VOLTAWEG 20 6101 XK ECHT THE NETHERLANDS	JOHNSON CONTROLS TYCO PARK GRIMSHAW LANE MANCHESTER M40 2WL UNITED KINGDOM	JOHNSON CONTROLS 5757 N GREEN BAY AVE. GLENDALE, WI 53209 USA

Contact information

Contact your local Johnson Controls representative: www.johnsoncontrols.com/locations
Contact Johnson Controls: www.johnsoncontrols.com/contact-us

© 2023 Johnson Controls. All rights reserved. All specifications and other information shown were current as of document revision and are subject to change without notice.