VD-1250 Series Volume Control Dampers

Product Bulletin

VD-1250

Code No. LIT-1201740
Issued October 2018

Since 1885, Johnson Controls has provided the highest quality control dampers that fit your application and size requirements.

- VD-1250 Aluminum blades or frame

Features and benefits

- **3-Year Warranty on Materials and Workmanship—**Provides confidence of company standing behind product.
- **3-Working-Day Premium Shipping after Order Entry at No Additional Cost—**Results in fast response for short lead time projects (subject to order size and factory capacity).
- **1-Working-Day Fast Track Shipping after Order Entry with Cost Premium—**Provides fast track (subject to order size and factory capacity).
- **Self-Compensating Side Seals—**Minimize leakage between the blades and the damper frame.

Applications

VD-1250 Series dampers offer sturdy construction of both frame and airfoil shaped blades of aluminum, and are designed to meet different application and environmental requirements. These applications include, but are not limited to:

- VD-1250—All aluminum dampers for use in harsh environments not suitable for galvanized steel.

Dampers are tested at an Air Movement Control Association (AMCA) Certified Laboratory using instrumentation and procedures in accordance with AMCA Standard No. 500, Test Methods for Louvers, Dampers, and Shutters.

Submittal Specifications

VD-1250 Aluminum Volume Control Damper

Furnish and install Johnson Controls® VD-1250 low leakage all aluminum volume control dampers.

Figure 1: VD-1250 Volume Control Damper



Frames are constructed of formed extruded aluminum with linkage concealed in the side channel to eliminate noise and friction. Compressible spring stainless steel side seals and self-lubricating bearings are also provided.

Blades are constructed with extruded aluminum in airfoil shape. Damper blade width must not exceed 6 in. and include seals. Blade pins are 1/2 in. plated steel hex. Operate blades in parallel or opposed as shown on the schedules.

Performance is designed for tight shutoff and tested in accordance with AMCA Standard 500. Leakage for a damper with seals must not exceed 3 cfm per square foot at a 1 in. w.g. The damper must be rated to operate over a temperature range of -72°F to 275°F (-58°C to 135°C).

Sizing is determined by the designer in accordance with accepted industry practices to ensure proper system performance. Blank off-plates and duct-to-damper transitions may be required.

Sizing is determined by the designer in accordance with accepted industry practices to ensure proper system performance. Blank off-plates and duct-to-damper transitions may be required.

Construction

Each frame is made of extruded aluminum channels.

Table 1: Materials

Part	Materials
Frame	**VD-1250:** 5 in. x 1 in. x 6063T5 extruded aluminum, hat channel shaped with 0.125 in. minimum wall thickness (127 x 25 x 3.2 mm).
Blades	**VD-1250:** 6 in. (152 mm) wide, 6063T5 heavy gauge extruded aluminum, airfoil shaped.
Axles	1/2 in. (13 mm), plated steel hex
Linkage	Concealed in end channel of frame
Extension	1/2 in. (13 mm) diameter, 6 in. (152 mm) long pin included with all control dampers
Bearings	**VD-1250:** Synthetic bearings standard. Stainless steel and vertical thrust optional
Blade seal	**VD-1250:** Ruskiprene™
Side seal	**VD-1250:** Self-compensating stainless steel

Dimensions

Frame dimensions are 5 x 1 x 0.125 in. minimum wall thickness (127 x 25 x 3.2 mm).

All Johnson Controls height and width dimensions are from the outside edges of the frame. Actual damper size is 1/4 in. less than nominal.

Figure 2: Mounting dimensions in inches (mm)

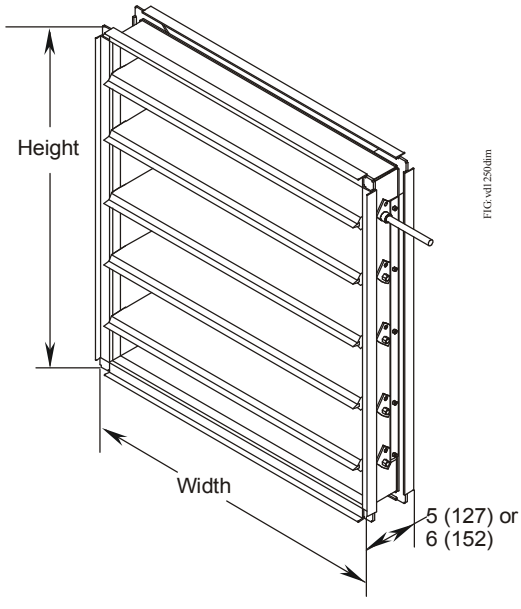

Figure 3: Mounting dimensions vertical blades with thrust washers

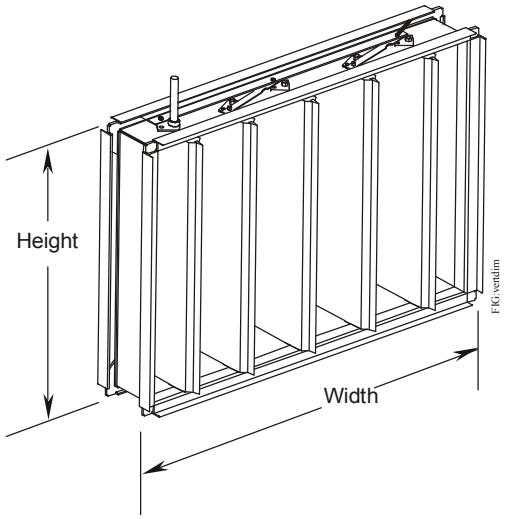

See Table 2 for panel size limits.

Table 2: Single-panel size limits

Dimension	Limits
Width	**VD-1250:** 60 in. **VD-1250 with thrust washers:** 48 in.
Height	**VD-1250:** 72 in. **VD-1250 with thrust washers:** 36 in.
Size increment	1 in. increments

Airfoil blades are made from nominal 1/16 in. extruded aluminum in an airfoil shape for high performance. Blade and side seals are standard. See Figure 4.

Figure 4: Blade profiles

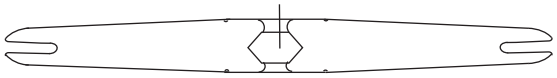

Standard Airfoil (VD-1250)

Note: All dimensions are nominal.

Selection information

Use the following to select the product:

1. Determine required size from drawings.
2. Select the features using the Damper Selector in Table 3 that matches the operation and performance required.
3. Enter width and height of damper.

Note: Actual damper size is 1/4 in. less than nominal.

4. Enter options required.

Example: VPESN-020x020 is an all aluminum damper that has airfoil-shaped blades, parallel blade operation, synthetic bearings, Ruskiprene blade seals, and self-compensating stainless steel side seals. Its dimensions are 20 in. wide x 20 in. high.

Volume Control damper ordering size limits are 192 in. wide and 228 in. high. All VD-1250 dampers are shipped factory coupled.

For sizes larger than our ordering limits, divide the size by the width or height limit to find the quantity of dampers. Then divide the width or height by the quantity to provide equal size dampers.

Factory-mounted actuators are standard outside air stream on a side plate. Actuators are selected by the factory for best performance at 7 lb in/sq ft for VD-1250.

Multiple section dampers are shipped assembled from the factory and include jackshafts.

Table 3: Damper selector[1]

	Ordering code number	V					-	w	w	w	x	h	h	h		
Application	V = Volume control															
Blade operation	O = Opposed P = Parallel															
Blade/frame	E = Extruded aluminum blade or aluminum frame (VD-1250)															
Bearing/seal	S = Standard (synthetic or Ruskiprene) E = Extended (stainless steel or Ruskiprene) T = Vertical blade (thrust or Ruskiprene)															
Actuator[2]	A = M9208-AGC-3 or M9220-AGC-3 (24 V, floating, spring return) B = M9208-GGC-3 or M9220-HGC-3 (24 V, modulating, spring return) C = M9208-BAC-3 or M9220-BAC-3 (120 V, two-position, spring return) D = M9208-BGC-3 or M9220-BGC-3 (24 V, floating, spring return) F = M9106-AGC-2 or M9116-AGC-2 (24 V floating, non-spring return) G = M9106-GGC-2 or M9116-HGC-2 (24 V modulating, non-spring return) N = No actuator P = D-3062-3 or D-3153-2 (pneumatic 8-13 lb spring range)															
Width	All models: 005 to 192 (parallel blade), 006 to 192 (opposed blade), 005 to 999 (vertical blade), 1 in. increments															
Height	All models: 005 to 228 (parallel blade), 009 to 228 (opposed blade), 006 to 999 (vertical blade), 1 in. increments															
Options (limit two)	See *Factory options* for descriptions and combinations.															

1. Not all combinations are available; check selector tool for valid combinations.
2. Actuators may restrict maximum sizes; check selector tool for valid maximum sizes. Actuators, by default, come externally mounted (outside air stream). Use option Q for internally mounted actuators.

Factory options

C Clear anodized finish

E Exact whole inch size, no undercut

F 1.5 in. L flange air entering side (cannot be used with option G)

G 1.5 in. L flange air leaving side (cannot be used with option F)

H Double flange (cannot be used with option F or G)

I Indicator switch

J Field installed jackshaft on single panel (multiple section units broken down and shipped in sections)

M Factory installed jackshaft on single panel units

Q Internal mount actuator (actuator mounted in air stream, minimum electric actuator 14 x 21 in., minimum pneumatic actuator 18 x 24 in.)

S Galvanized steel frame

Multiple section stacking details

Maximum Panel size for VD-1250 dampers is 48 in. wide x 72 in. high. See Table 2 for maximum panel sizes.

Figure 5: Multiple section stacking options

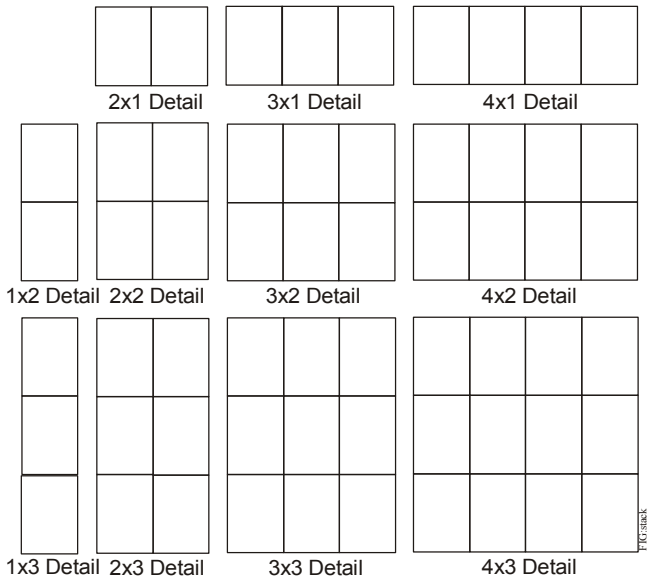

Maintenance

Johnson Controls VD-1250 dampers have no components that require routine scheduled maintenance.

During normal duct maintenance, damper blades should be wiped clean if necessary and opened/closed to verify complete rotation and sealing.

Table 4: Repair parts

Code number	Description
DMPR-RC062	Ruskiprene blade stop seal for VD-1250; 10 ft long
DMPR-RC063	Ruskiprene blade seal for parallel and opposed bladed VD-1250; 10 ft long

Technical specifications

VD-1250 Volume control dampers[1]

<table>
<tr><td rowspan="2">Leakage resistance</td><td colspan="2">VD-1250</td><td colspan="4">3 cfm/sq ft maximum at 1 in. static pressure
8 cfm/sq ft maximum at 4 in. static pressure
11 cfm/sq ft maximum at 8 in. static pressure up to 48 in. wide</td></tr>
<tr><td colspan="2">VD-1250</td><td colspan="3">0.5 in. static pressure, 100 fpm fully open approach velocity
1 in. static pressure, 1,000 fpm fully open approach velocity
10 in. static pressure, 2,500 fpm fully open approach velocity</td><td>7 lb·in/sq ft
7 lb·in/sq ft
9 lb·in/sq ft</td></tr>
<tr><td rowspan="4">Pressure drop (inches WG) - fully open</td><td colspan="2" rowspan="2">Size (in.)</td><td colspan="4">Approach velocity (fpm)</td></tr>
<tr><td>1,000</td><td>2,000</td><td>3,000</td><td>4,000</td></tr>
<tr><td rowspan="2">VD-1250</td><td>24 x 24</td><td>0.02</td><td>0.08</td><td>0.17</td><td>0.3</td></tr>
<tr><td>36 x 36</td><td>0.02</td><td>0.04</td><td>0.10</td><td>0.2</td></tr>
<tr><td rowspan="3">Velocity requirements</td><td colspan="2" rowspan="2"></td><td colspan="4">Width (in.)</td></tr>
<tr><td>12</td><td>24</td><td>36</td><td>48</td></tr>
<tr><td colspan="2">VD-1250</td><td>6,000 fpm
at 13 in. static</td><td>5,000 fpm
at 10.8 in. static</td><td>4,000 fpm
at 8.5 in. static</td><td>4,000 fpm
at 6.0 in. static</td></tr>
<tr><td rowspan="3">Temperature rating</td><td colspan="2" rowspan="2">Standard and extended operating conditions</td><td>VD-1250</td><td colspan="3">-72°F to 275°F (-58°C to 135°C)</td></tr>
<tr><td>VD-1251TI and VD-1251BF</td><td colspan="3">-40°F to 165°F (-40°C to 73°C)</td></tr>
<tr><td colspan="2">Actuator</td><td colspan="4">-4°F to 122°F (-20°C to 50°C)</td></tr>
<tr><td rowspan="2">Approximate weight</td><td colspan="2">VD-1250</td><td colspan="4">7 lb/sq ft (3.2 kg/sq ft)</td></tr>
<tr><td colspan="2">Actuator</td><td colspan="4">2.9 pounds (1.6 kg) per actuator</td></tr>
</table>

1. All Performance data is determined using instrumentation and procedures at an AMCA Certified Laboratory in accordance with AMCA Standard No. 500, Test Methods for Louvers, Dampers, and Shutters.

The performance specifications are nominal and conform to acceptable industry standards. For application at conditions beyond these specifications, consult the local Johnson Controls office. Johnson Controls shall not be liable for damages resulting from misapplication or misuse of its products. Refer to the M9208-xxx-x Series Electric Spring Return Actuators Product Bulletin (LIT-12011480), M9220-xxx-3 Electric Spring Return Actuators Product Bulletin (LIT-12011057), and M9108, M9116, M9124, and M9132 Series Electric Non-spring Return Actuators Product Bulletin (LIT-2681058) for necessary information on operating and performance specifications for the actuator.

Building Technologies & Solutions
507 E. Michigan Street, Milwaukee, WI 53202

Metasys® and Johnson Controls® are registered trademarks of Johnson Controls.
All other marks herein are the marks of their respective owners. © 2018 Johnson Controls.