Low Differential Pressure Transducer DP180 Series Product Bulletin

LIT-12013729

2021-05-13

Introduction

The Johnson Controls® Low Differential Pressure Transducer DP180 Series provides a rugged, high accuracy solution. The DP180 delivers accuracies of ±0.5% FS with display, and optional ±0.25% FS with display, and pressure ranges from ±0.1 in. W.C. up to 25 in. W.C. The DP180 is housed in a robust, NEMA 4 rated enclosure that reduces installation and material costs. The DP180 has an LCD display with a standard accuracy of ±0.5% that makes it ideal for high accuracy pharmaceutical applications.

The core technology of the DP180 is the all stainless steel capacitive sensing element. The welded dead-ended capacitive sensor requires minimal amplification and delivers excellent accuracy and longterm stability.

Figure 1: DP180 transducer

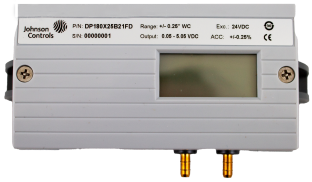

Applications

The Low Differential Pressure Transducer DP180 Series has the following suggested uses:

- HVAC Systems
- Energy management systems
- Static duct pressure
- Cleanroom pressure
- Oven pressurization and furnace draft controls

Features and benefits

The Low Differential Pressure Transducer DP180 has standard customization and a robust enclosure. Features include:

- Optional 3.5 digit LCD display with FS accuracy
  LCD Display
  ±0.25% or ±0.5% FS Accuracy
- NEMA 4 rated housing
- Conduit electrical termination
- 24 VAC or 24 VDC excitation
- Suitable for harsh environments
- CE and RoHS compliant

Standard customization

The DP180 offers many mechanical and electrical options that you can integrate into existing designs.

Robust enclosure

The DP180 is housed in a NEMA 4 rated housing and is built to withstand harsh environments. The wall mount enables installation of the sensor anywhere to maximize space efficiency in difficult applications.

Dimensions

The dimensions of the DP180 Transducer are shown in the following figure.

Figure 2: Dimensions of the DP180 Transducer, in. (mm)

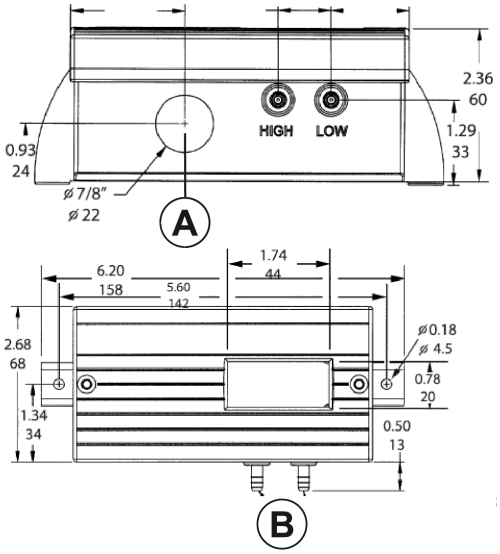

Callout	Description
A	Conduit opening, electrical termination
B	3/16 in. pressure fitting for 1/4 in. push-on tubing

Ordering information

See the following table for ordering options for the DP180 Low Differential Pressure Transducers. All units have 1/2 in. conduit electrical fitting. For example, DP180X25U41HD is model DP180 with 0 in. to 0.25 in. W.C., 4 mA to 20 mA output, 1/2 in. conduit termination, and ±0.5% accuracy.

Table 1: Product codes

Product code	Range, in in. W.C.	Output	Accuracy
DP1802X5U41HD	0 to 2.5	4 mA to 20 mA	±0.5% FS with LCD display
DP180005U41HD	0 to 5	4 mA to 20 mA	±0.5% FS with LCD display
DP180X25B41HD	±0.25	4 mA to 20 mA	±0.5% FS with LCD display
DP180005U41FD	0 to 5	4 mA to 20 mA	±0.25% FS with LCD display
DP180010U41FD	0 to 10	4 mA to 20 mA	±0.25% FS with LCD display
DP180010B21HD	±10	0 VDC to 5 VDC	±0.5% FS with LCD display
DP1802X5U21FD	0 to 2.5	0 VDC to 5 VDC	±0.25% FS with LCD display
DP180005U21HD	0 to 5	0 VDC to 5 VDC	±0.5% FS with LCD display
DP180X25B21FD	±0.25	0 VDC to 5 VDC	±0.25% FS with LCD display
DP1802X5U21HD	0 to 2.5	0 VDC to 5 VDC	±0.5% FS with LCD display
DP1800X5B41HD	±0.5	4 mA to 20 mA	±0.5% FS with LCD display
DP180005B21HD	±5	0 VDC to 5 VDC	±0.5% FS with LCD display
DP1800X1B21HD	±0.1	0 VDC to 5 VDC	±0.5% FS with LCD display
DP1800X1B41HD	±0.1	4 mA to 20 mA	±0.5% FS with LCD display
DP180001U41HD	0 to 1	4 mA to 20 mA	±0.5% FS with LCD display
DP1800X5B21HD	±0.5	0 VDC to 5 VDC	±0.5% FS with LCD display
DP180001B21HD	±1	0 VDC to 5 VDC	±0.5% FS with LCD display
DP180025U41HD	0 to 25	4 mA to 20 mA	±0.5% FS with LCD display
DP180X25B41FD	±0.25	4 mA to 20 mA	±0.25% FS with LCD display
DP180005U21FD	0 to 5	0 VDC to 5 VDC	±0.25% FS with LCD display
DP1800X5U41HD	0 to 0.5	4 mA to 20 mA	±0.5% FS with LCD display
DP180001U21FD	0 to 1	0 VDC to 5 VDC	±0.25% FS with LCD display
DP1800X1B41FD	±0.1	4 mA to 20 mA	±0.25% FS with LCD display
DP180001B41HD	±1	4 mA to 20 mA	±0.5% FS with LCD display
DP180005B41HD	±5	4 mA to 20 mA	±0.5% FS with LCD display
DP180010U41HD	0 to 10	4 mA to 20 mA	±0.5% FS with LCD display
DP1800X5U21FD	0 to 0.5	0 VDC to 5 VDC	±0.25% FS with LCD display
DP180001U21HD	0 to 1	0 VDC to 5 VDC	±0.5% FS with LCD display
DP180010U21HD	0 to 10	0 VDC to 5 VDC	±0.5% FS with LCD display

Technical specifications

Table 2: Low Differential Pressure Transducer DP180 technical specifications

Description	Specification		
Performance data ⓘ **Note:** For position effect, consult the factory.	Accuracy RSS, at constant temperature ⓘ **Note:** RSS of non-linearity, hysteresis, and non-repeatability.	**Standard** ±0.5% FS	**Optional** ±0.25% FS
	Non-linearity, BFSL	±0.48% FS	± 0.22% FS
	Hysteresis	±0.10% FS	±0.10% FS
	Non-repeatability	±0.05% FS	±0.05% FS
Physical specifications	Case	IP65/NEMA 4 plastic glass-filled polycarbonate UL94V-O case	
	Electrical connection	1/2 in. conduit	
	Zero and span adjustments	Accessible inside of case	
	Weight, approximately	9.0 oz (255 g)	
Electrical data, voltage	Circuit	3-wire (Exc, Gnd, Sig) protected from mis-wiring	
	Excitation, for 0 VDC to 5 VDC output	9 to 30 VAC /12 to 40 VDC	
	Output ⓘ **Note:** Calibrated into a 50K ohm load, operable into a 5K ohm load or greater.	0 VDC to 5 VDC ⓘ **Note:** Zero output factory set to within ±25 mV. Span full-scale output factory set to within ±25 mV.	
Electrical data, current	Circuit	2-wire, protected from incorrect wiring	
	Output ⓘ **Note:** Calibrated at factory with a 24 VDC loop supply voltage and a 250 ohm load.	4 mA to 20 mA ⓘ **Note:** Zero output factory set to within ±0.16 mA, ±0.08 mA for optional accuracies. Span full-scale output factory set to within ±0.08 mA.	
	Bidirectional output at zero	12 mA	
	Minimum loop supply voltage, VDC	9 + 0.02 x (resistance of receiver plus line)	
	Maximum loop supply voltage, VDC	30 + 0.004 x (resistance of receiver plus line)	
Thermal effects ⓘ **Note:** Units calibrated at nominal 70°F. Maximum thermal error calculated from this data.	Compensated range	40°F to 150°F (5˚C to 65˚C)	
	Zero or span shift	%FS ±0.033°F (±0.06°C)	
	Maximum line pressure	10 psi, 277 in. W.C.	
	Overpressure	Up to 10 psi (277 in. W.C.), range dependent	
	Long-term stability	0.1% FS total	
Environmental data	Operating temperature ⓘ **Note:** Operating temperature limits of the electronics only. Pressure media temperatures may be considerably higher.	0°F to 150°F (-18°C to 65°C)	
	Storage temperature	-65°F to 180°F (-54°C to 82°C)	

The performance specifications are nominal and conform to acceptable industry standards. For application at conditions beyond these specifications, consult the local Johnson Controls office. Johnson Controls shall not be liable for damages resulting from misapplication or misuse of its products.

© 2021 Johnson Controls. All rights reserved. All specifications and other information shown were current as of document revision and are subject to change without notice.