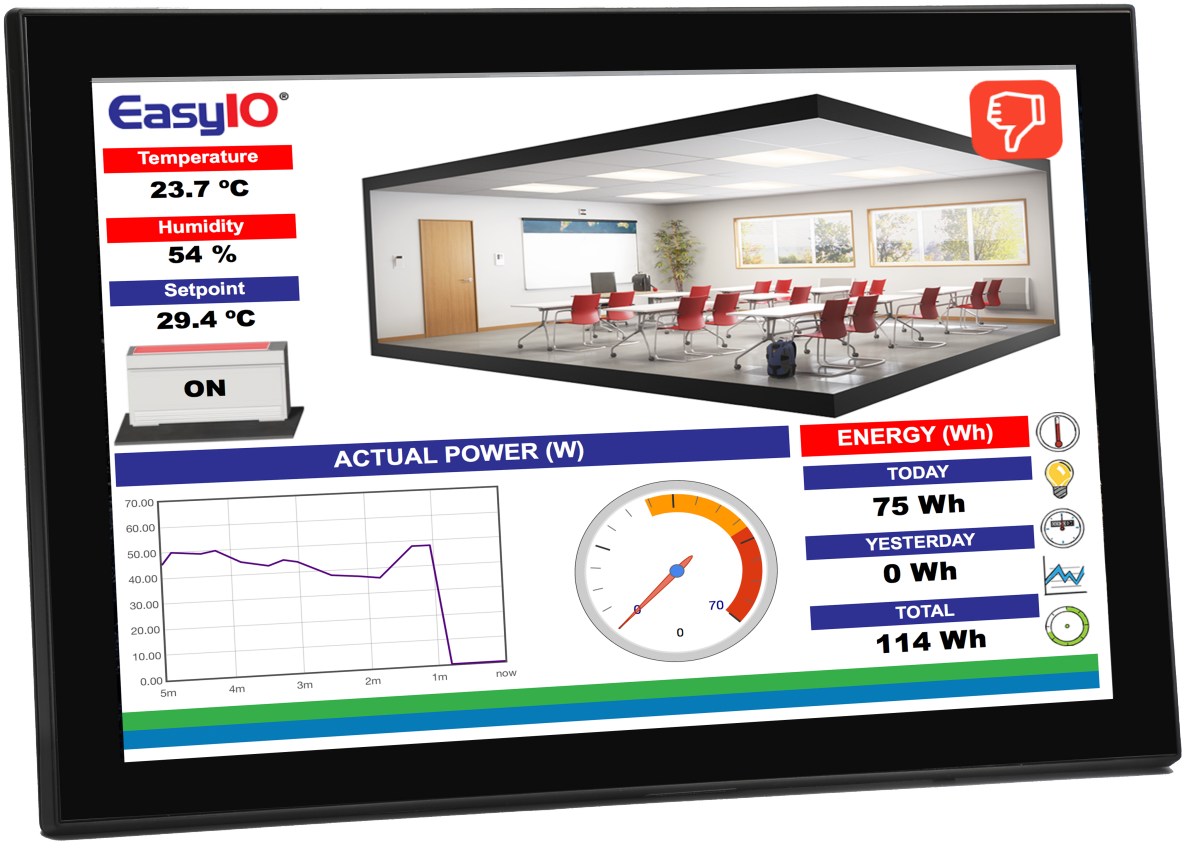

EasyIOeu SH-SystemView10 Configuration v2.2



Document Change Log

28th Jan 2019
Document created for new version of SystemView10.

24th May 2019
Update mounting instructions.



Table of Contents

Introduction....4
Specifications....5
Dimension....6
Hardware Installation - Flush mounting....7
Hardware Installation - On-wall mounting....9
Ethernet/Date & time....11
SystemView 2.0a....12
SystemView 2.0a Settings....13
Configurations....14
Technical Support....15



Introduction

Thank you for purchasing EasyIO products.
This user guide will help you to configure SystemView10 in a fast and efficient manner.

This device is based on Android OS and so there are several settings that device is expecting to get from the network in order to work properly.

- Date & Time
- IP Address

If you are using the device without connection to Internet / DHCP Router make sure you setup this properties correctly in order to get the device working correct.
As Android device gets the date and time from the Internet on every power up.

Please note that these SystemView touch panels are developed to present the graphic pages from the EasyIO controllers.
Every other use of these touch panel should be tested prior to commissioning.



Specifications

Model:		SystemView10
Hardware Specs	Solution:	Allwinner A83T processor
	CPU:	8-Core ARM Cortex A7 CPU, 1.2Ghz
	Display:	10.1 Inch IPS Display, Resolution:1280 x 800, Brightness:350 nit, Ratio:16:10
	RAM:	2GB
	Nand Flash:	8GB
	Sound System:	1W X 1, With Speaker Tunnel
	Protection	meets IP31
Software Feature	System:	Google Android 6.0.1
	Video:	H.264 2160p video decoding, Multi-format FHD video decoding, including Mpeg1/2, Mpeg4 SP/ASP GMC, H.263, H.264, VP6/8, AVS jizun, Jpeg/Mjpeg,etc. H.264 High Profile 1080p@30fps or 720@60fps encoding 3840 x 1080@30fps 3D decoding, BD/SBS/TAB/FP supported Complies with RTSP, HTTP, HLS, RTMP, MMS streaming media protocols
	Audio:	Integrated Hi-Fi 100dB audio codec Dual analog mic amplifiers
	Language:	Support multi-languages
Interfaces	Back:	Ethernet Interface (RJ45)
		USB Port 2.0, MICRO USB(OTG)
		DC IN Power Plug
	Bottom:	Power On/Off Button, Pin Hole For Reboot
Network	WIFI	WIFI (802.11b/g/n)
	LAN Port	Ethernet RJ45
Accessories	Power Supply:	Power Supply: 12V/1500mA
	Mounting:	Integrated bracket and metal clips for flush mounting. Wall bracket, screws & plugs for on-wall mounting.

Dimension

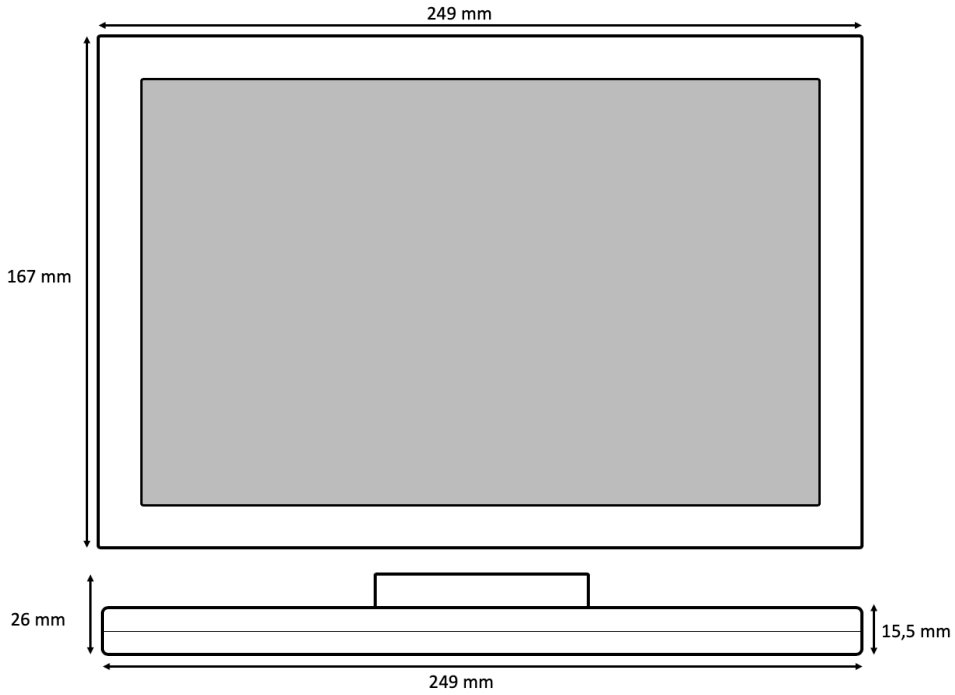

Bracket for On-Wall mounting

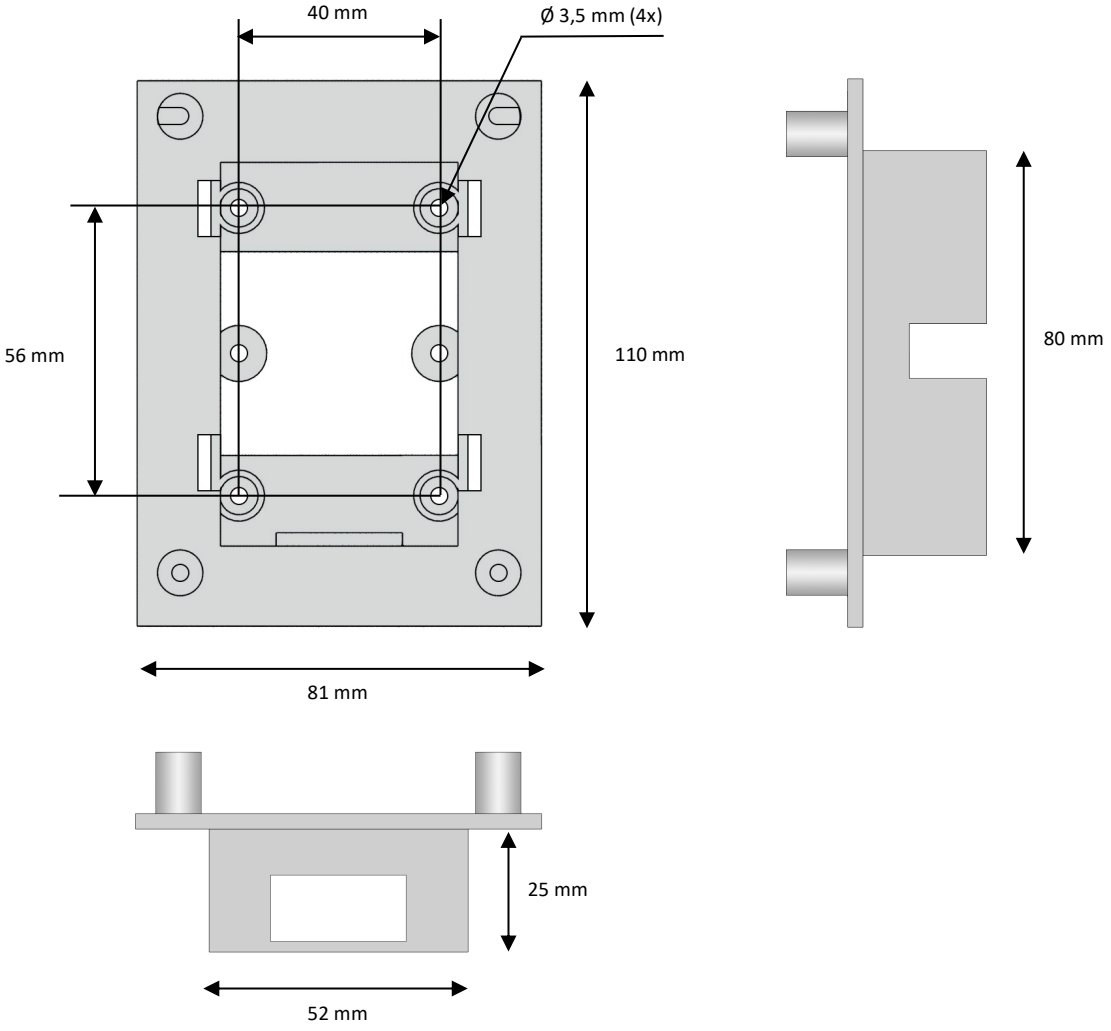

Hardware Installation - Flush mounting

Step 1
Make the cut-out for the touch panel.

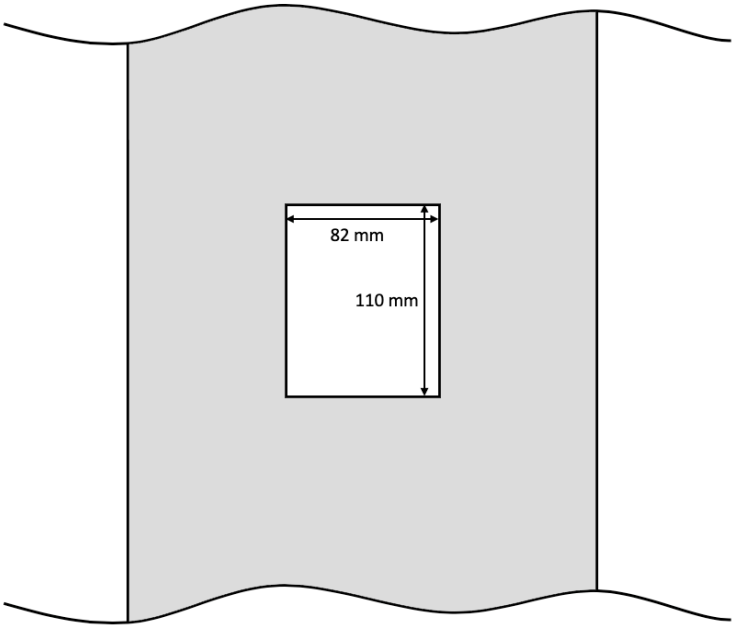

Step 2
Place it in the touch panel cut-out.

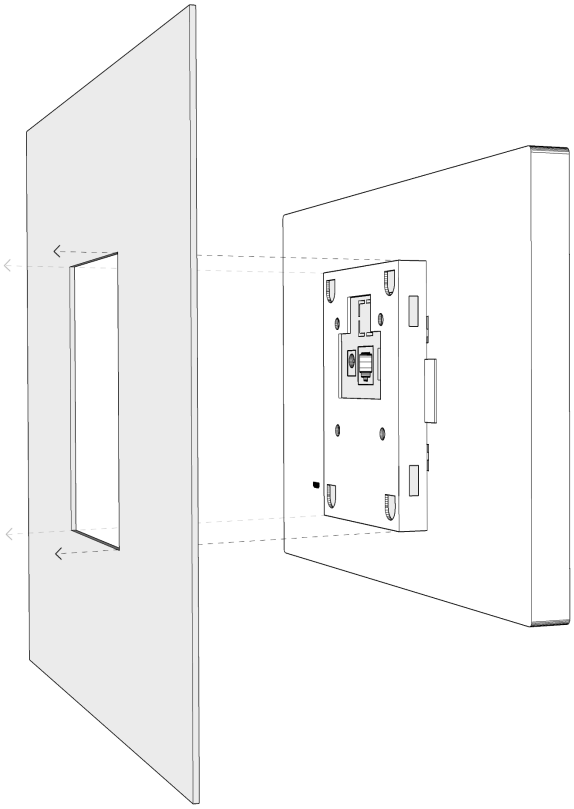

Step 3
Put the 4 brackets into the touch panel backplate holes.

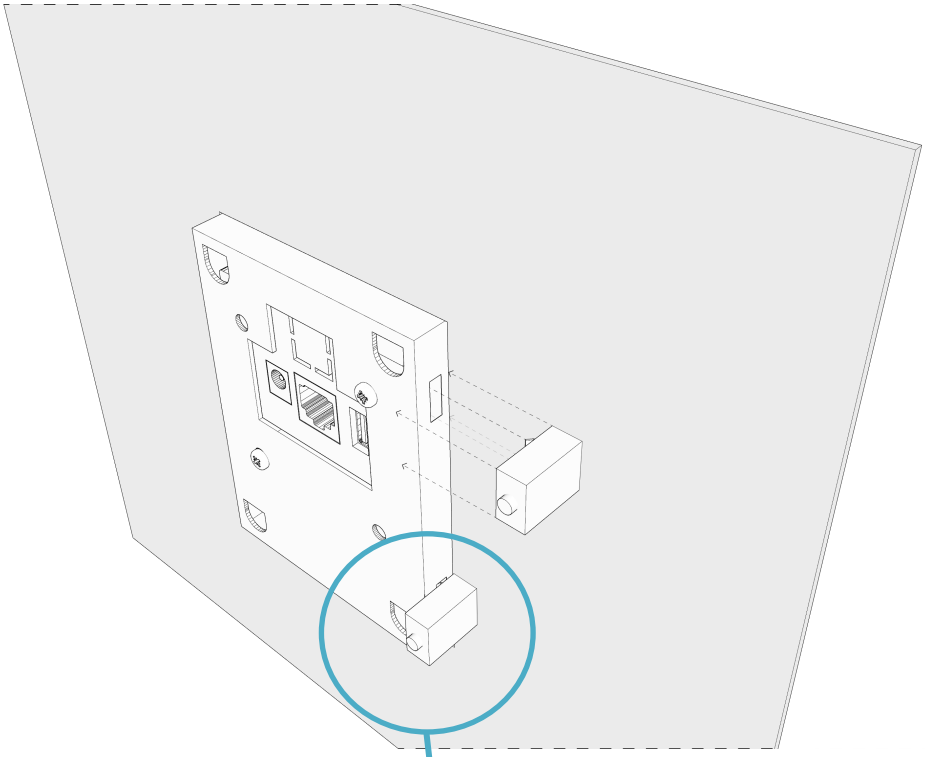

Step 4
Tighten the screw to secure the touch panel to the panel (4x).

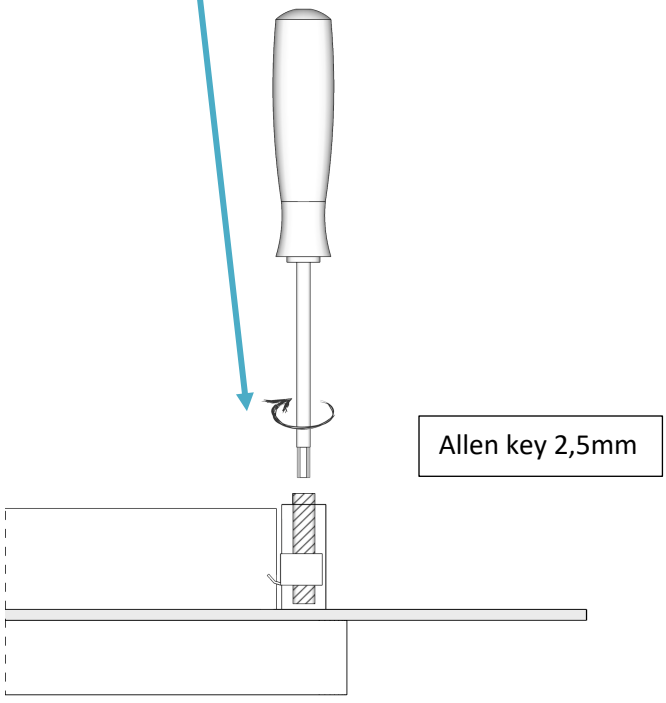

Hardware Installation - On-wall mounting

Step 1
Screw the wall bracket to the wall.

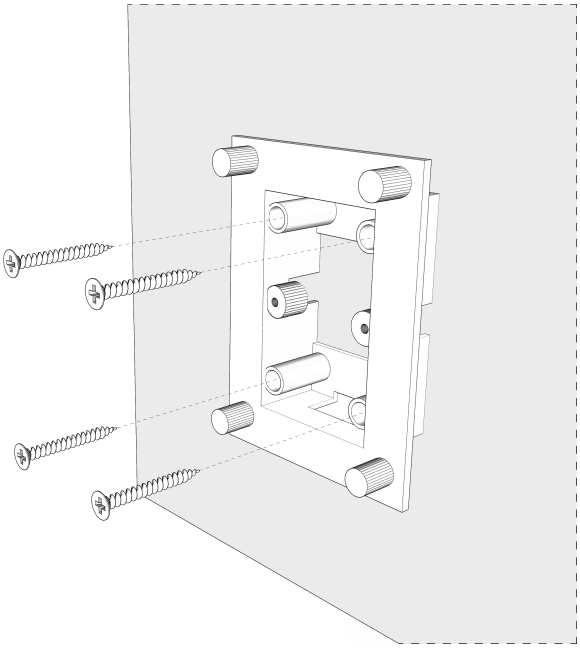

Step 2
Attach the SystemView10 to the wall bracket.

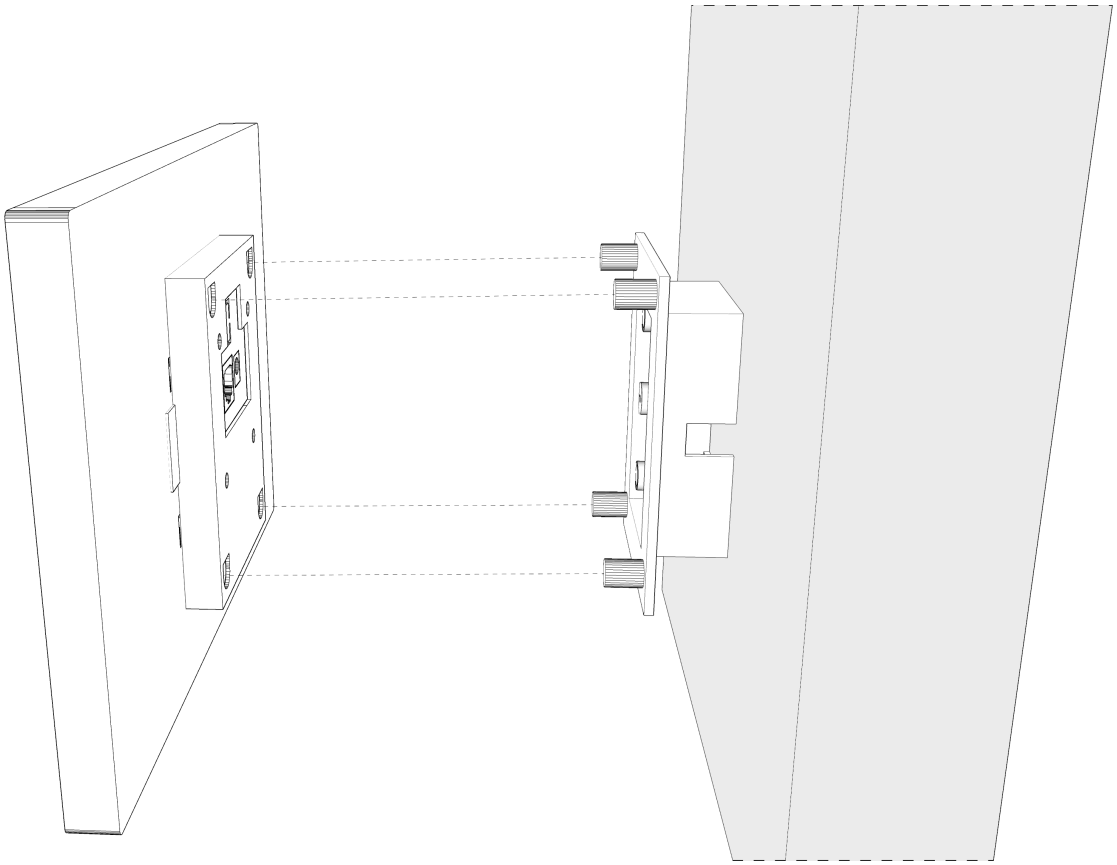

Step 3
Tighten the screws (2x) to secure the SystemView10.

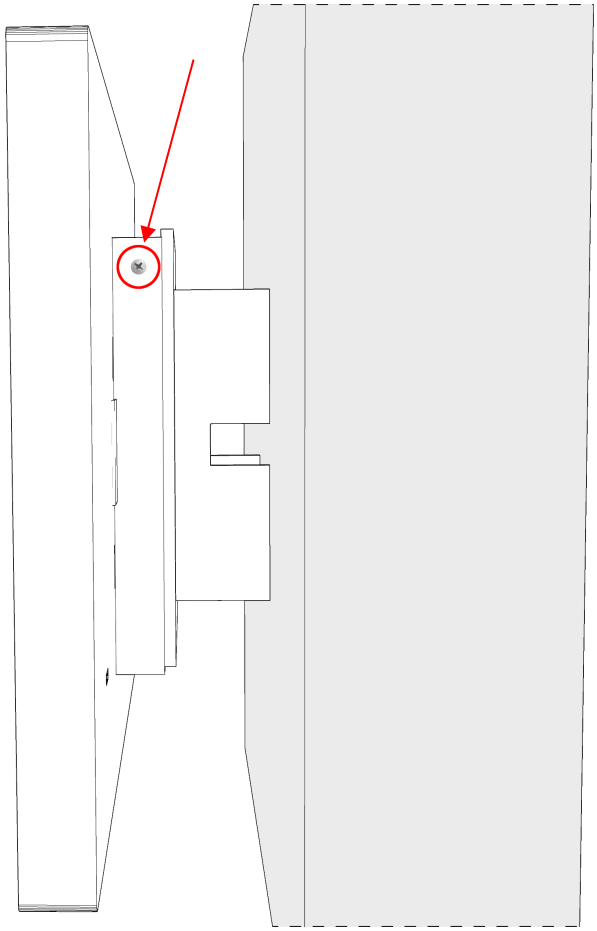

Ethernet/Date & time

To connect the touch panel to some device by Ethernet you need to configure the Ethernet network. This needs to be done in the Android system settings.

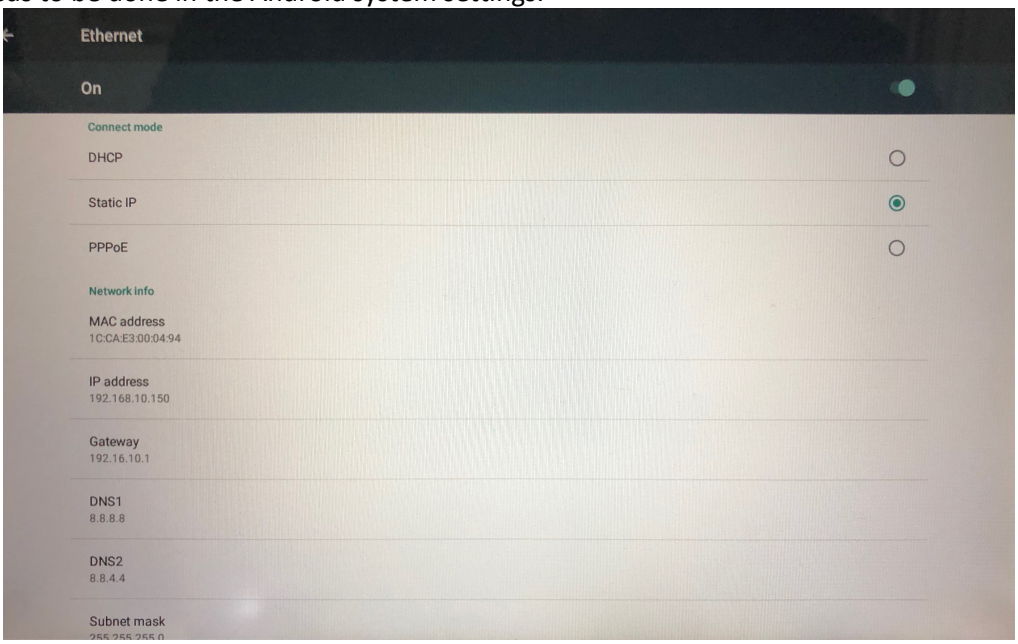

Go to Settings->Ethernet, enable Ethernet and if you want to use Static IP address click on **Static IP**

- Set the IP Address of your SystemView10;
- Set the Subnet mask of your network (usually 255.255.255.0);
- Set the Gateway.
- Set the DNS1 and DNS2. (8.8.8.8 and 8.8.4.4 for Google DNS or set the IP of the router as your DNS)

Don't use/enable both networks at same time, Ethernet and Wi-Fi.

To have your touch panel showing the graphics in the right time you need to make sure you have the date and time updated.

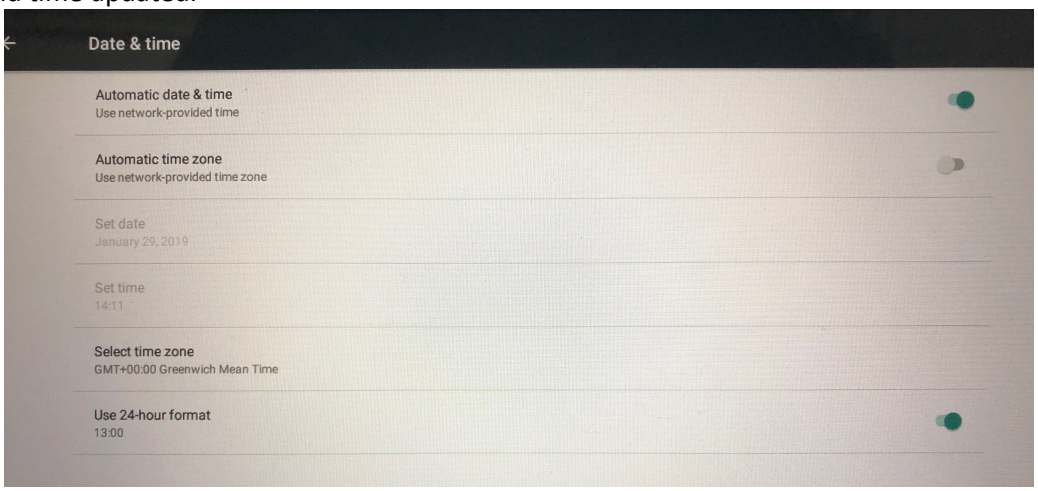

Disable Automatic time zone and Select time zone of your country. If the touch panel is not connected to internet disable Automatic date & time, so Set date and Set time.

SystemView 2.0a

This app was made to keep the web page opened and to exit only through password.

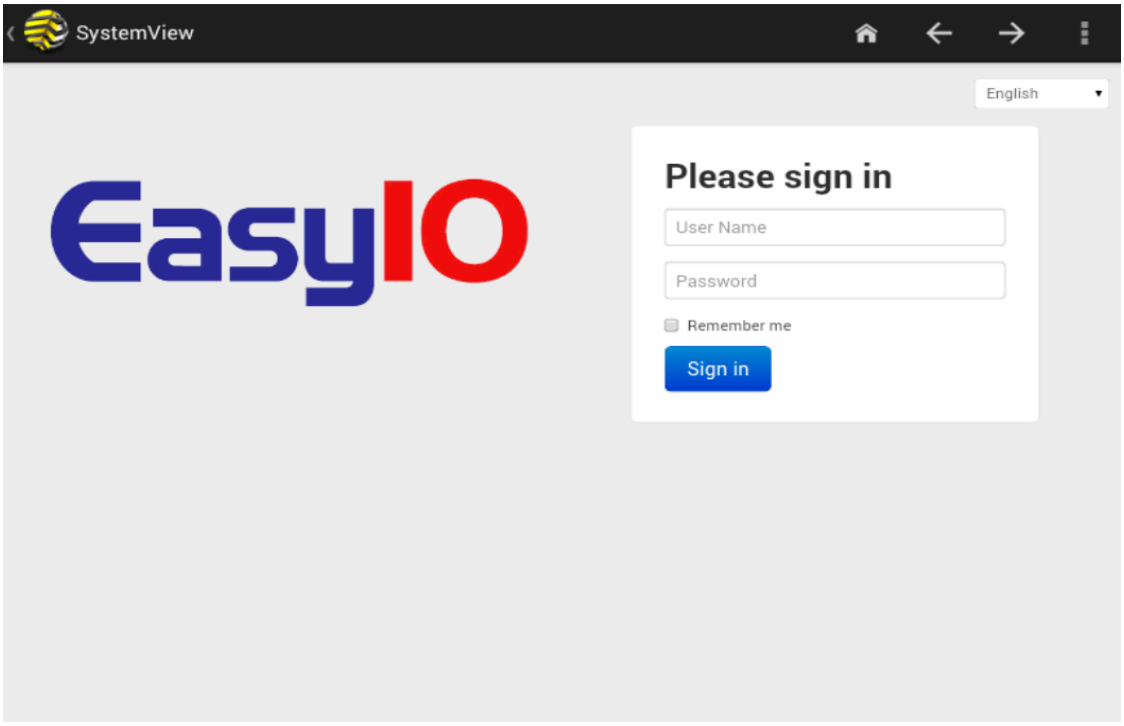

SystemView app will open on boot and even when the touch panel reboots it will open automatically.
To configure this app you just need to set the IP of your device and first time you power the touch panel you need to set to open this app always on boot.

How to exit from SystemView
To exit from SystemView you have to swipe down on top of the screen, then press the three dots in the top right corner and then click on Settings. You will be prompted to enter a password, the default password is “345710” (without quotation marks). On SystemView Settings you can change the settings of the app, if you want to go to Android Settings or Android launcher you have to go to Admin and then click on System Settings or Exit to Launcher depending on where you want to go.

How to change the IP on SystemView
To change the IP on SystemView you need to go to SystemView Settings (step above), then click on General and change the SystemView URL. (it has to start with http:// or https://)

How to exit from Android Settings
To exit from Android Settings you need to go to Settings>Apps click on Settings and then Force Stop. Doing this you are stopping the Settings and then it will open the SystemView (if you were there before).

How to install a new SystemView version
To install a new version of SystemView first go to Settings->Apps and click on SystemView then Uninstall.
Power down the touch panel and connect an USB stick with the latest SystemView app.
Power on and go to Menu->File Manager->USB->usbhost0 and click on latest SystemView apk file. Installation will start.
Power down and remove the USB stick.



Power on and go to SystemView Settings->Advanced, Set “Prevent keyboard form submission” OFF.

SystemView 2.0a Settings

Screensaver and Auto-refresh

SystemView app has an Auto-refresh and Screensaver option enabled by default, this means after 5 minutes the SystemView app will open the screensaver (black image) and it will keep refreshing the web page on background every 5 minutes.

General

Idle Page Timeout
Enables page timeout, causes reload of SystemView URL and displays screensaver if enabled.
(Default = ON)

Timeout
Specified in minutes, the time that SystemView is considered to be idle.
(Default = 5 minutes)

Features

Screensaver
Display screensaver when the idle timeout limit has been reached.
(Default = ON)

Zoom on web page

The zooming is enabled by default so the zoom in/out can be done on the web page. When SystemView loads/reloads the web page it will show in Overview mode by default, it can also loads/reloads the page based on a Initial Zoom Level.

General

Page Zooming
Enables pinch zooming/double tap – note changes may require restart.
(Default = ON)

Overview Mode
Loads page in overview i.e. zoomed out – may require restart.
(Default = ON)

Initial Zoom Level
Zoom when page first loads, setting to zero disables. Overrides overview mode if enabled.
(Default = 0)



Configurations

By default this SystemView device must come with this configuration from factory, anyway you can check these configuration to make sure it works correctly.

- SystemView 2.0a app installed.
- screensaver.png image must be pasted into folder /storage/emulated/0/systemview/screensaver/

Settings:

Display

- Hide status bar -> enable;
- SystemUI Gestures -> disable; (Make sure this is disabled)

Location

- Off;

Language & input

- Language -> English;

Date & time

- Automatic time zone -> disable;
- Select time zone -> GMT+02:00, Central European Summer Time (Amsterdam, Berlin);
- Use 24-hour format -> enable;

Developer options

- Stay awake -> enable;
- Show touches -> enable;
- Don't keep activities -> enable;



Technical Support

To get the latest software or for any technical question contact technical support.

Email:support@easyio.eu