F262 Series Airflow Switch Product Bulletin

LIT-12011988

2021-04-20

Introduction

The F262 Series Airflow Switch detects airflow or the absence of airflow by responding only to the velocity of air movement within a duct. You can wire the single-pole, double-throw (SPDT) switch to open one circuit and close a second circuit for either signaling or interlock purposes.

Airflow failure during the normal operation of air handling systems may cause overheating, coil icing, or other conditions that may be detrimental to the equipment.

Figure 1: F262 Airflow Switch



Features and benefits

Type 3R (NEMA) polycarbonate enclosure

Provides for use in indoor applications and dust protection; suitable for use in other environmental air space (plenums) in accordance with Section 300.22(C) of the National Electrical Code.

Dependable, dust-protected SPDT snap-acting Pennswitch

Detects the presence or absence of airflow.

Large wiring space

Makes wiring convenient and easily accessible.

Easily accessible range adjustment screw

Allows easy field adjustment.

Application

Typical applications include:

- Make-up air systems
- Air cooling or heating processes
- Exhaust systems

The airflow switch includes a Type 3R (NEMA) enclosure with an integral mounting plate. A mounting plate gasket is supplied with each airflow switch.

The SPDT Pennswitch includes color coded terminals for ease of wiring. The airflow switch is factory set at approximately the minimum flow rate, see Table 1. Do not set the switch any lower than the factory setting, or it may fail to return to a no-flow off condition. To maintain a higher flow rate setting, turn the range adjusting screw clockwise.

Mount the F262 Series Airflow Switch on the top, side, or bottom of a duct in a horizontal position whenever possible. If you require vertical duct mounting and the flow is downward, you must readjust the airflow setting. If the flow is upward, see Table 1 for the minimum flow required to actuate the control.

The control is not designed for use where it is exposed to outside weather.

Airflow velocity

For the airflow velocities required to activate the switch for any given duct size with horizontal or vertical upward flow, see the following table based on a standard air density of 0.075 lb/ft^3 (1.2 kg/m^3).

Table 1: Flow rate table

Paddle width	Switch actuation on flow	Minimum air velocity required to activate control, fpm (m/s)			
		Horizontal flow		Vertical flow	
		50 in.^{2} (323 cm^2) or larger duct area	Less than 50 in.^{2} (323 cm^2) duct area	50 in.^{2} (323 cm^2) or larger duct area	Less than 50 in.^{2} (323 cm^2) duct area
2-1/8 in.	Increase R to Y closes	625 (3.2)	575 (2.9)	950 (4.8)	750 (3.8)
	Decrease R to B closes	325 (1.7)	220 (1.1)	850 (4.3)	575 (2.9)
3-1/8 in.	Increase R to Y closes	500 (2.5)	350 (1.8)	750 (3.8)	500 (2.5)
	Decrease R to B closes	250 (1.3)	100 (0.5)	650 (3.3)	350 (1.8)

Dimensions

Figure 2: F262 Series Airflow Switch with Type 3R (NEMA) enclosure dimensions, in. [mm]

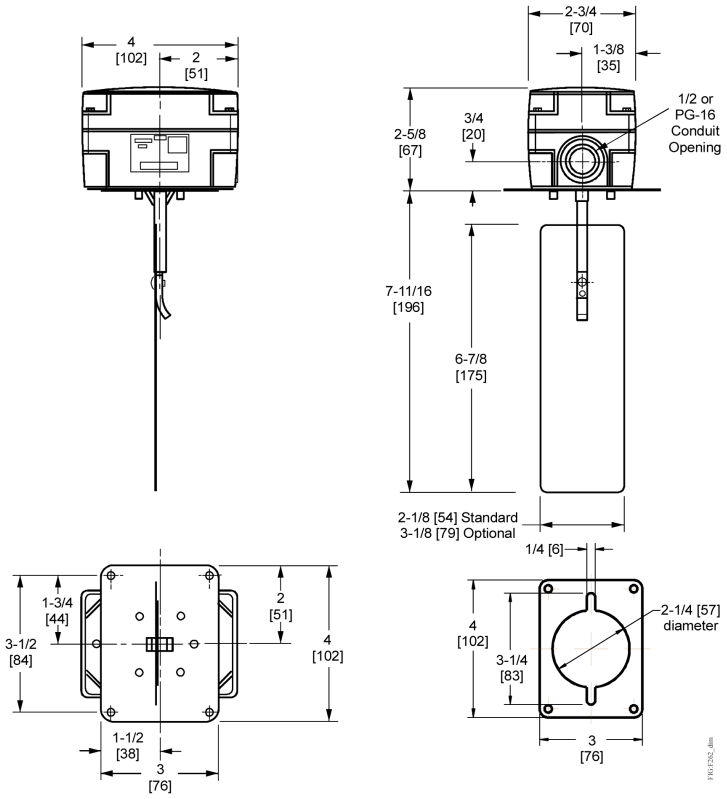

Ordering information

Cross reference

Table 2: F62 to F262 models cross reference

F62 Series model	F262 Series model
F62AA-8C	F262KDH-01C
F62AA-9C	

Selection tables

Table 3: F262 Series Airflow Switch

Product code	Description
F262KDH-01C	Airflow switch with a 2-1/8 in. wide x 6-7/8 in. long (54 mm x 175 mm) paddle installed and a 3-1/8 in. wide x 6-7/8 in. long (79 mm x 175 mm) paddle supplied with the control

Table 4: Replacement paddle kits for F262 Series Airflow Switch

Product code	Description
PLT112-1R	2-1/8 in. wide x 6-7/8 in. long (54 mm x 175 mm) paddle
PLT112-2R	3-1/8 in. wide x 6-7/8 in. long (79 mm x 175 mm) paddle

Repair information

Do not make field repairs, except for replacement of the flow paddle. For a replacement control or paddle kit, contact the nearest Johnson Controls®/Penn distributor. For more information, contact Johnson Controls/ Penn application engineering at 1-800-275-5676 or 1-414-524-5535.

F262 Series Airflow Switch technical specifications

Table 5: F262 Series Airflow Switch electrical ratings

Volts 50/60 Hz	UL 60730/UL 1059				EN 60730	
	24	120	208	240	24	230
Horsepower	–	1	1	1	–	–
Full load amperes	–	16	10	10	–	8
Locked rotor amperes	–	96	60	60	–	48
Resistive amperes	16	16	10	10	16	16
Pilot duty VA	125	720	720	720	77	720

Table 6: UL conformity declaration information

Information	Description
Purpose of control	F262 Series Airflow Switch
Construction of control	Electronic independently mounted control
Number of cycles	100,000 cycles
Method of mounting control	Mounting to sensed media vessel/ orientation
Type 1 or Type 2 action	Type 1.C (Micro-interruption)
External pollution situation	Pollution degree 4
Internal pollution situation	Pollution degree 2
Rated impulse voltage	4,000 VAC

Table 6: UL conformity declaration information

Information	Description
Ball pressure temperature	Enclosure: 266°F (130°C) Switch component: 252°F (122°C)
Control adjustment instruction	-
Field wiring rating	Wire/cord temperature ratings: • 140°F (60°C) only permitted when ambient air and media are less than 113°F (45°C) • 167°F (75°C) only permitted when ambient air and media are less than 140°F (60°C) • 194°F (90°C) only permitted when ambient air is less than 140°F (60°C) and media is less than 167°F (75°C) • 302°F (150°C) permitted when ambient air is less than 140°F (60°C) and media is less than 176°F (80°C)

Table 7: F262 Series Airflow Switch technical specifications

Specification	Description
Switch	SPDT
Enclosure	UL: Type 3R (NEMA) CE: IP43
Wiring connections	Three color-coded screw terminals and one ground terminal
Conduit connection	One 7/8 in. (22 mm) hole for 1/2 in. trade size (or PG16) conduit
Paddle material	0.006 in. (0.15 mm) stainless spring steel
Maximum air velocity	2,000 fpm (10.16 m/sec)
Maximum duct air temperature	176°F (80°C)
Ambient conditions	32°F to 131°F (0°C to 55°C)

Table 7: F262 Series Airflow Switch technical specifications

Specification	Description
Compliance	**North America:** cULus Listed; UL 60730, File E6688; FCC Compliant to CFR47, Part 15, Subpart B, Class B Plenum rated; UL 2043, suitable for use in other environmental spaces, plenums, in accordance with section 300.22.(c) of the National Electrical Code Industry Canada (IC) Compliant to Canadian ICES-003, Class B limits
CE	**Europe:** CE Mark – Johnson Controls declares that this product is in compliance with the essential requirements and other relevant provisions of the EMC Directive and the Low Voltage Directive.
	Australia/New Zealand: Mark: RCM Compliant

The performance specifications are nominal and conform to acceptable industry standards. For application at conditions beyond these specifications, consult Johnson Controls/PENN Refrigeration Application Engineering at 1-800-275-5676. Johnson Controls shall not be liable for damages resulting from misapplication or misuse of its products.

North American emissions compliance

United States

This equipment has been tested and found to comply with the limits for a Class B digital device, pursuant to Part 15 of the FCC Rules. These limits are designed to provide reasonable protection against harmful interference in a residential installation. This equipment generates, uses and can radiate radio frequency energy and, if not installed and used in accordance with the instructions, may cause harmful interference to radio communications. However, there is no guarantee that interference will not occur in a particular installation. If this equipment does cause harmful interference to radio or television reception, which can be determined by turning the equipment off and on, the user is encouraged to try to correct the interference by one or more of the following measures:

- Reorient or relocate the receiving antenna.
- Increase the separation between the equipment and receiver.
- Connect the equipment into an outlet on a circuit different from that to which the receiver is connected.
- Consult the dealer or an experienced radio/TV technician for help.

Warning (Part 15.21)

Changes or modifications not expressly approved by the party responsible for compliance could void the user's authority to operate the equipment.

Canada

This Class (B) digital apparatus meets all the requirements of the Canadian Interference-Causing Equipment Regulations.

Cet appareil numérique de la Classe (B) respecte toutes les exigences du Règlement sur le matériel brouilleur du Canada.

Industry Canada Statement(s)

This device complies with Industry Canada licence-exempt RSS standard(s). Operation is subject to the following two conditions:

1. This device may not cause interference, and
2. This device must accept any interference, including interference that may cause undesired operation of the device.

Le présent appareil est conforme aux CNR d'Industrie Canada applicables aux appareils radio exempts de licence. L'exploitation est autorisée aux deux conditions suivantes :

1. L'appareil ne doit pas produire de brouillage, et
2. L'utilisateur de l'appareil doit accepter tout brouillage radioélectrique subi, même si le brouillage est susceptible d'en compromettre le fonctionnement.

Product warranty

This product is covered by a limited warranty, details of which can be found at www.johnsoncontrols.com/buildingswarranty.

Single point of contact

APAC	Europe	NA/SA
JOHNSON CONTROLS C/O CONTROLS PRODUCT MANAGEMENT NO. 32 CHANGJIJANG RD NEW DISTRICT WUXI JIANGSU PROVINCE 214028 CHINA	JOHNSON CONTROLS WESTENDHOF 3 45143 ESSEN GERMANY	JOHNSON CONTROLS 507 E MICHIGAN ST MILWAUKEE WI 53202 USA

Contact information

Contact your local branch office:
www.johnsoncontrols.com/locations

Contact Johnson Controls: www.johnsoncontrols.com/contact-us

© 2021 Johnson Controls. All rights reserved. All specifications and other information shown were current as of document revision and are subject to change without notice.