F263 Series Liquid Level Float Switches Product Bulletin

Introduction

The F263 Series Liquid Level Float Switches are designed to maintain a liquid level in indoor or outdoor closed tanks that hold water or other nonhazardous liquids. When the liquid level in the tank rises above or falls below the required level, the single-pole, double-throw (SPDT) switch closes one circuit and opens a second circuit.

WARNING

Risk

This product is made of a copper alloy, which contains lead. The product is therefore not to be used on drinking water.

Figure 1: F263 Series Liquid Level Float Switch



Features and Benefits

Viton® Diaphragm

Allows use in fluid lines carrying chlorinated water, treated water, or other nonhazardous liquids.

Single-Pole, Double-Throw Switch

Provides control where liquid levels rise and fall

Sturdy Type 4 (NEMA) Enclosure

Allows for use in indoor or outdoor applications; inhibits the formation of moisture in low temperature applications.

Solid Polycarbonate Float (F263MAP Models)

Provides greater resistance to corrosion

Application

- **Important:** Use this F263 Series Liquid Level Float Switch only as an operating control. Where failure or malfunction of the liquid level switch could lead to personal injury or property damage to the controlled equipment or other property, additional precautions must be designed into the control system. Incorporate and maintain other devices, such as supervisory or alarm systems or safety or limit controls, intended to warn of or protect against failure or malfunction of the liquid level switch.

- **Important:** Utiliser ce F263 Series Liquid Level Float Switch uniquement en tant que dispositif de régulation. Lorsqu'une défaillance ou un dysfonctionnement du liquid level switch risque de provoquer des blessures ou d'endommager l'équipement contrôlé ou un autre équipement, la conception du système de contrôle doit intégrer des dispositifs de protection supplémentaires. Veiller dans ce cas à intégrer de façon permanente d'autres dispositifs, tels que des systèmes de supervision ou d'alarme, ou des dispositifs de sécurité ou de limitation, ayant une fonction d'avertissement ou de protection en cas de défaillance ou de dysfonctionnement du liquid level switch.

- **Important:**

  - Do not use F263MAC and F263MAP Float Switches where the fluid in the pipes drops below the fluid’s freezing point, causing an internal freeze-up.
  - Do not use F263 Series Float Switches with hazardous fluids or in hazardous atmospheres. Use in these conditions may cause malfunction or improper operation.

Use F263 Series Float Switches in closed tanks where a liquid level is to be maintained. A change in the liquid level opens or closes an electrical circuit.

Use F263MAP switches on indoor or outdoor tanks that hold water or other nonhazardous liquids at temperatures greater than the liquid's freezing point and between -20°F (-29°C) and 212°F (100°C). The maximum allowable liquid pressure is 150 psig (1035 kpa).

Use F263MAC switches on indoor or outdoor tanks that hold water or other nonhazardous liquids at temperatures greater than the liquid's freezing point and between -20°F (-29°C) and 250°F (121°C). The maximum allowable liquid pressure is 100 psig (690 kpa).

ⓘ **Note:** Do not use these float switches with liquids that are lighter than water.

Table 1: F263 Float Switches Applications

Model	F263MAC-V01C	F263MAP-V01C
Float	copper float	polycarbonate float
Enclosure	Type 4 (NEMA) / IP67	
Application	Designed for use with indoor or outdoor tanks that hold water or other nonhazardous liquids at temperatures that are greater than the liquid’s freezing point and in the range of -20 to 212°F (-29 to 100°C) for polycarbonate floats or -20 to 250°F (-29 to 121°C) for copper floats.	
Required Temperature at Enclosure	greater than -20°F (-29°C)	

Operation

The F263 Series Float Switch controls water levels to within approximately 1/2 in. (13 mm).

When the liquid level falls approximately 1/2 in. (13mm) below the height at which the switch is installed, the switch closes the red contact (common) to the blue contact. See Figure 2 and Figure 3.

When the liquid level in the tank rises to the height at which the switch is installed, the switch closes the red contact (common) to the yellow contact. See Figure 2 and Figure 3.

Figure 2: F263 Float Switch Setup

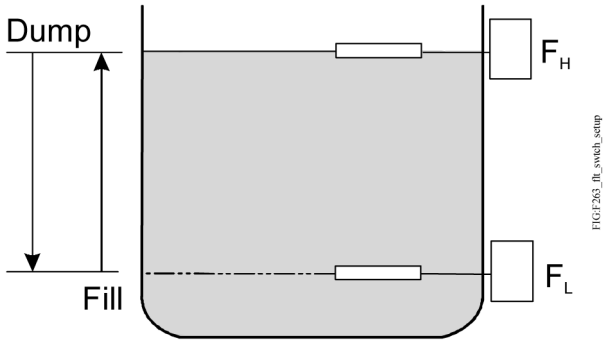

Figure 3: F263 Float Switch Action

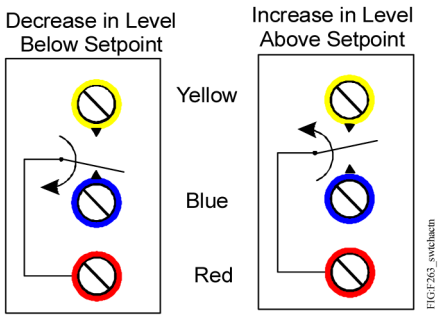

Dimensions

Figure 4: F263 Float Switch with Type 4 (NEMA) Enclosure, Shown with Polycarbonate Float and Copper Float Options Dimensions, in. [mm]

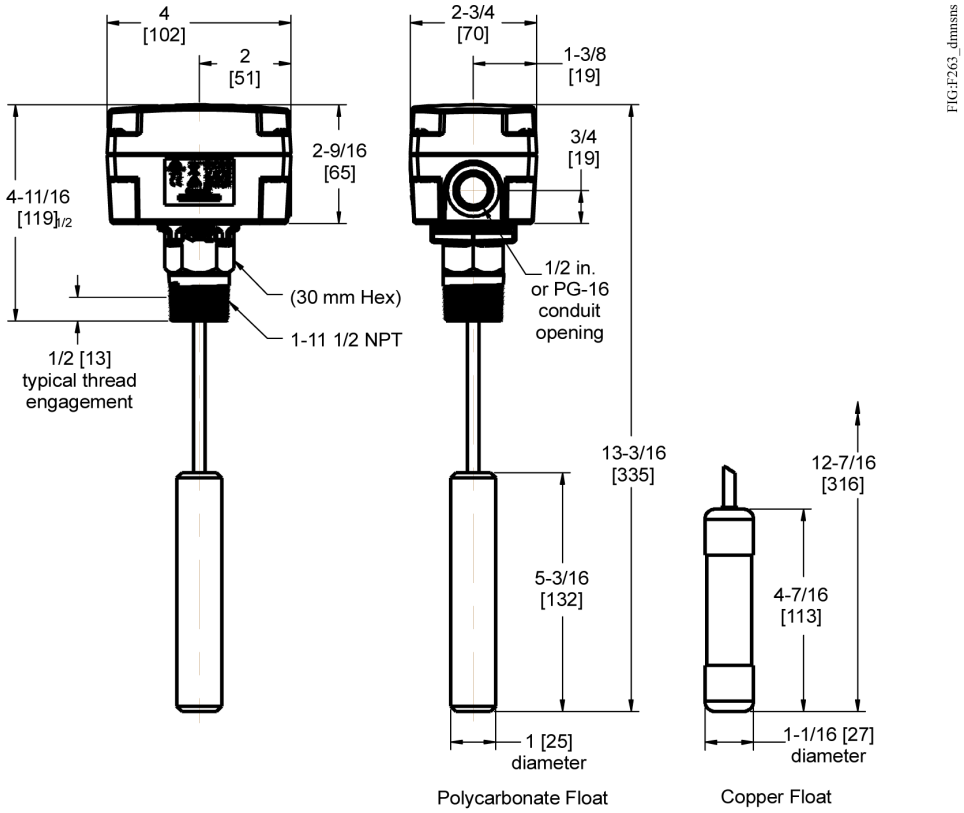

Repair Information

Do not make field repairs, except for replacement of the flow paddle. For a replacement control or paddle kit, contact the nearest Johnson Controls/PENN distributor. For more information, contact Johnson Controls/PENN application engineering at 1-800-275-5676 or 1-414-524-5535.

Ordering Information

Cross Reference

Table 2: F63 to F263 Models Cross Reference

F61 Series Model	F263 Series Model
F63AC-1C	F263MAC-V01C
F63BF-1C	F263MAC-V01C
F63EC-1C	F263MAP-V01C
F63FF-1C	F263MAP-V01C

Selection Table

Table 3: F263 Series Float Switches

Product Code Number	Description
F263MAC-V01C	SPDT float switch with Type 4 (NEMA) enclosure and copper float for liquid temperatures -20 to 250°F (-29 to 121°C); maximum liquid pressure 100 psig (690 kPa)
F263MAP-V01C	SPDT float switch with Type 4 (NEMA) enclosure and polycarbonate float for liquid temperatures -20 to 212°F (-29 to 100°C); maximum liquid pressure 150 psig (1,035 kPa)

F263 Series Float Switches Technical Specifications

Table 4: F263 Switch Electrical Ratings

	UL60730				EN60730	
Volts 50/60 Hz	**24**	**120**	**208**	**240**	**24**	**230**
Horsepower	–	1	1	1	–	–
Full Load Amperes	–	16	10	10	–	8
Locked Rotor Amperes	–	96	60	60	–	48
Resistive Amperes	16	16	10	10	16	16
Pilot Duty VA	125	720	720	720	125	720

Table 5: UL Conformity Declaration Information

Information	Description
Purpose of Control	F263 Liquid Level Float Switch
Construction of Control	Electronic independently mounted control
Number of Cycles	100,000 cycles
Method of Mounting Control	Mounting to sensed media vessel/orientation
Type 1 or Type 2 Action	Type 1.C (Microinterruption)
External Pollution Situation	Pollution degree 4
Internal Pollution Situation	Pollution degree 2
Rated Impulse Voltage	4,000 VAC
Ball Pressure Temperature	**Enclosure:** 266°F (130°C) **Switch Component:** 252°F (122°C)
Control Adjustment Instruction	-

Table 5: UL Conformity Declaration Information

Information	Description
Field Wiring Rating	**Wire/Cord Temperature Ratings:** • 140°F (60°C) only permitted when ambient air and media are less than 113°F (45°C) • 167°F (75°C) only permitted when ambient air and media are less than 140°F (60°C) • 194°F (90°C) only permitted when ambient air is less than 140°F (60°C) and media is less than 167°F (75°C) • 302°F (150°C) permitted when ambient air is less than 140°F (60°C) and media is less than 249°F (121°C)
Vessel Pressure	**F263 Liquid Level Float Switch with Copper Float:** 100 psi (690 kPa) **F263 Liquid Level Float Switch with Polycarbonate Float:** 150 psi (1935 kPa)

Table 6: F263 Series Liquid Level Float Switches Technical Specifications

Specification	Description
Switch	Single-Pole, Double-Throw (SPDT)
Enclosure	**UL:** Type 4 (NEMA) **CE:** IP67
Wiring Connections	Three color-coded screw terminals and one ground terminal
Conduit Connection	One 7/8 in. (22 mm) hole for 1/2 in. trade size (or PG16) conduit
Pipe Connector	1 in. 11-1/2 NPT threads
Minimum Tank Diameter	9 in. (229 mm)
Maximum Liquid Pressure	100 psig (690 kPa) for copper float 150 psig (1035 kPa) for polycarbonate float
Liquid Temperature Range	Minimum: -20°F (-29°C) or liquid freezing point Maximum: 212°F (100°C) polycarbonate, 250°F (121°C) copper
Ambient Conditions	Minimum: -40°F (-40°C) Maximum: 140°F (60°C)
Compliance	**North America:** cULus Listed; UL 60730, File E6688; FCC Compliant to CFR47, Part 15, Subpart B, Class B Industry Canada (IC) Compliant to Canadian ICES-003, Class B limits
CE	**Europe:** CE Mark – Johnson Controls declares that this product is in compliance with the essential requirements and other relevant provisions of the EMC Directive and the Low Voltage Directive.
	Australia/New Zealand Mark: RCM Compliant

© 2019 Johnson Controls. All rights reserved. All specifications and other information shown were current as of document revision and are subject to change without notice.