F263 Series Liquid Level Switches Installation Guide

Applications

- **Important:** Use this F263 Series Liquid Level Switch only as an operating control. Where failure or malfunction of the liquid level switch could lead to personal injury or property damage to the controlled equipment or other property, additional precautions must be designed into the control system. Incorporate and maintain other devices, such as supervisory or alarm systems or safety or limit controls, intended to warn of or protect against failure or malfunction of the liquid level switch.
- **Important:** Utiliser ce F263 Series Liquid Level Switch uniquement en tant que dispositif de régulation. Lorsqu'une défaillance ou un dysfonctionnement du liquid level switch risque de provoquer des blessures ou d'endommager l'équipement contrôlé ou un autre équipement, la conception du système de contrôle doit intégrer des dispositifs de protection supplémentaires. Veiller dans ce cas à intégrer de façon permanente d'autres dispositifs, tels que des systèmes de supervision ou d'alarme, ou des dispositifs de sécurité ou de limitation, ayant une fonction d'avertissement ou de protection en cas de défaillance ou de dysfonctionnement du liquid level switch.
- **Important:**
  - Do not use F263MAC and F263MAP Liquid Level Switches where the fluid in the pipes drops below the fluid’s freezing point, causing an internal freeze-up.
  - Do not use F263 Series Liquid Level Switches with hazardous fluids or in hazardous atmospheres. Use in these conditions may cause malfunction or improper operation.

⚠ WARNING

Risk

This product is made of a copper alloy, which contains lead. The product is therefore not to be used on drinking water.

The F263 Series Liquid Level Switches are designed to maintain a liquid level in indoor or outdoor closed tanks holding water or other non-corrosive liquids. When the liquid level in the tank rises above or falls below the required level, the single-pole, double-throw (SPDT) switch closes one circuit and opens a second circuit.

Use F263 Series Liquid Level Switches in closed tanks where a liquid level is to be maintained. A change in the liquid level opens or closes an electrical circuit.

Use F263MAP switches on indoor or outdoor tanks that hold water or other nonhazardous liquids at temperatures greater than the liquid's freezing point and between -20°F (-29°C) and 212°F (100°C). The maximum allowable liquid pressure is 150 psig (1035 kPa).

Use F263MAC switches on indoor or outdoor tanks that hold water or other nonhazardous liquids at temperatures greater than the liquid's freezing point and between -20°F (-29°C) and 250°F (121°C). The maximum allowable liquid pressure is 100 psig (690 kPa).

Note: Do not use these liquid level switches with liquids with a density less than the density of water.

Installation

Dimensions

Figure 1: F263 Float Switch with Type 4 (NEMA) Enclosure, Shown with Polycarbonate Float and Copper Float Options Dimensions, in. [mm]

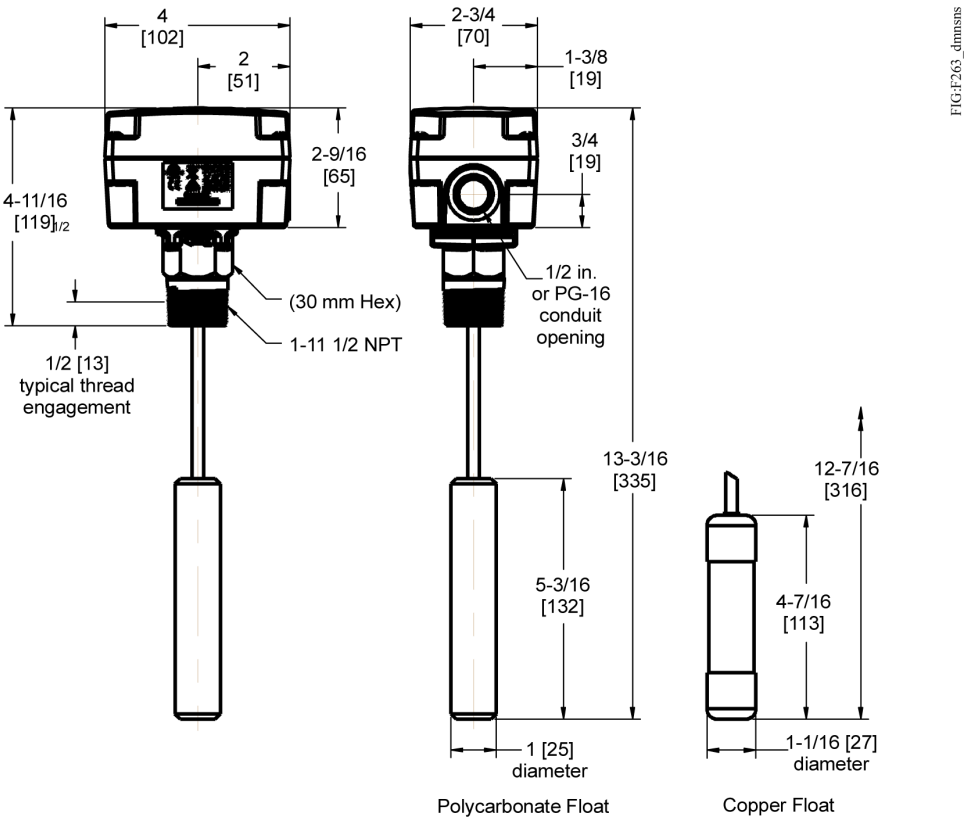

Installation Procedure

WARNING

Risk of Personal Injury.

Shut off the liquid supply and relieve pressure in the line before servicing the valve. Contents of liquid lines could be under pressure and the release of liquid under pressure may cause severe personal injury.

⚠ AVERTISSEMENT

Risque de blessure.

Couper l'arrivée de liquide et évacuer la pression présente dans la conduite avant toute intervention sur la vanne. Les liquides à l'intérieur des conduites peuvent être sous pression et la libération soudaine de liquide sous pression risque de provoquer des blessures graves.

Important:

- Do not allow the float to touch the side of the tank or any other obstructions.
- To avoid damaging the switch, do not tighten by grasping the switch enclosure. Use only the wrench flats provided.
- Do not remove the cover gasket or the wire grommet in the conduit opening. Removing these items will allow moisture to enter and condensate to form inside a NEMA 3R enclosure.
- To avoid damaging the float, ensure that the float is not subject to pressures exceeding these limitations:
  - 100 psig (690 kPa) for copper float
  - 150 psig (1035 kPa) for polycarbonate float

Install the F263 control into a properly threaded (and sealed) 1 in. diameter hole in the tank at the desired height for the liquid level. Position the control with the arrow on the enclosure pointing upward. Ensure that the threads are adequately sealed.

Figure 2: Installing the Float Switch

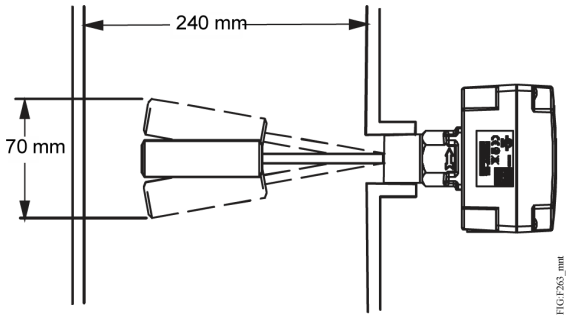

Wiring

⚠ WARNING

Risk of Electric Shock.

Disconnect the power supply before making electrical connections. The printed circuit board and its components are at AC line voltage. Contact with components carrying hazardous voltage can cause electric shock and may result in personal injury or death.

⚠ AVERTISSEMENT

Risque de décharge électrique.

Débrancher l'alimentation avant de réaliser tout raccordement électrique. Le circuit imprimé et ses composants présentent une tension CA. Tout contact avec des composants porteurs de tensions dangereuses risque d'entraîner une décharge électrique et de provoquer des blessures graves, voire mortelles.

➤ **Important:** Use copper conductors only. Make all wiring connections in accordance with local, national, and regional regulations. Do not exceed the flow switch's electrical ratings.

Color-Coded Screw Terminals

➤ **Important:** Use the terminal screws provided (8-32 x 1/4 in. binder head). Substitution of other screws voids the warranty and agency approvals.

All F263 models have color-coded screw terminals.

- Red is common
- Red closes to Yellow on liquid level increase
- Red closes to Blue on liquid level decrease

The F263 switch has three color-coded terminals. Red is common. Remove the cover to make wiring connections. See Figure 3 for terminal identification.

Figure 3: Terminal and Wiring Identification

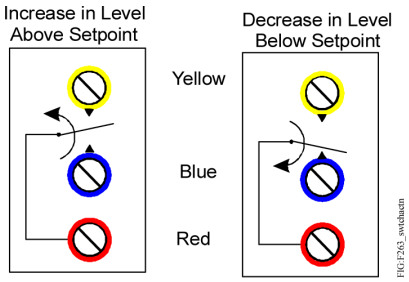

Table 1: F261 Control Switch Action

Flow Action	Switch Closure
Increase	Red to Yellow
Decrease	Red to Blue

See Figure 4 and Figure 5 for suggested circuits for controlling liquid levels with several inches (or feet) between minimum and maximum levels.

Figure 4: Circuit for Controlling Fill Levels

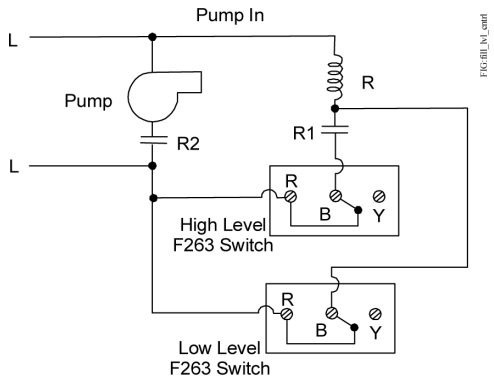

Figure 5: Circuit for Controlling Dump Levels

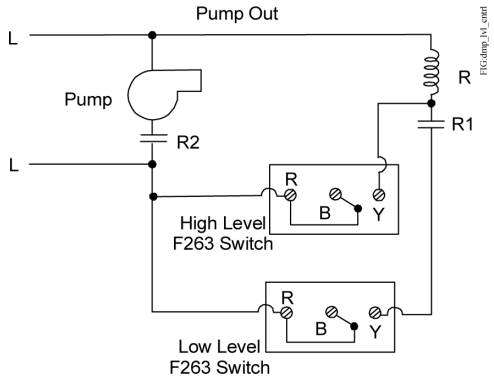

Setup and Adjustments

CAUTION

Risk of Property Damage.

Do not set the switch lower than the factory setting. The switch is factory set at approximately the minimum flow rate. A lower setting may result in the switch failing to return to a no-flow position which may result in damage to the controlled equipment or other property.

ATTENTION

Risque de dégâts matériels.

Ne pas régler le commutateur sur une valeur inférieure au paramètre d'usine. Le commutateur est réglé en usine sur une valeur correspondant environ au débit minimum. Un réglage sur une valeur inférieure risque d'empêcher le commutateur de revenir sur une position « aucun-débit », ce qui risque d'endommager l'équipement contrôlé ou de provoquer d'autres dégâts matériels.

⚠ CAUTION

Risk of Property Damage.

Do not attempt to change sealed settings. Attempted adjustment may damage the control or cause loss of calibration or other property damage.

⚠ ATTENTION

Risque de dégâts matériels.

Ne pas essayer de modifier la position des éléments de réglage bloqués. Toute tentative de réglage risque d'endommager le dispositif de contrôle ou de provoquer la perte des valeurs d'étalonnage ou d'autres dégâts matériels.

➤ **Important:** All F263 switches are factory-set and factory-sealed. **Do not** attempt to change the factory settings. Changing the factory settings voids the warranty.

Checkout Procedure

Before applying power, ensure that installation and wiring connections are made to job specifications.

After making all necessary adjustments and electrical connections, put the system into operation and observe at least three complete operation cycles before leaving the installation site.

Operation

The F263 Float Switch controls water levels to within approximately 1/2 in. (13 mm).

When the liquid level falls approximately 1/2 in. (13mm) below the height at which the switch is installed, the switch closes the red contact (common) to the blue contact. See Figure 6 and Figure 7.

Figure 6: Terminal and Wiring Identification

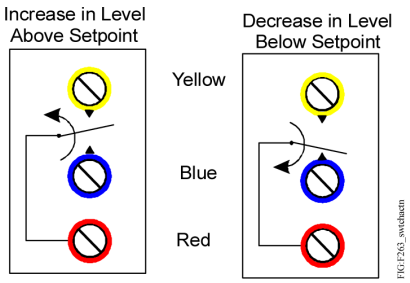

When the liquid level in the tank rises to the height at which the switch is installed, the switch closes the red contact (common) to the yellow contact. See Figure 6 and Figure 7.

Figure 7: F263 Float Switch Setup

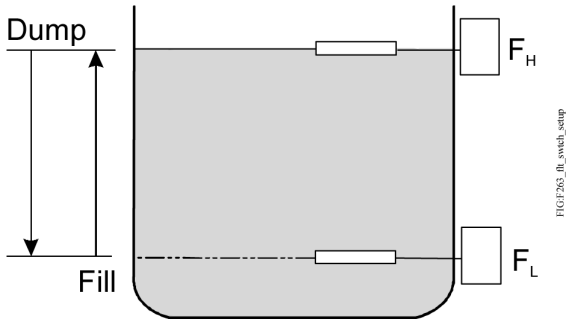

Repair Information

Do not make field repairs, except for replacement of the float. For a replacement control or float, contact the nearest Johnson Controls/PENN distributor. For more information, contact Johnson Controls/PENN application engineering at 1-800-275-5676.

F263 Liquid Level Float Switches Technical Specifications

Table 2: F263 Series Liquid Level Switch Electrical Ratings

	UL60730/UL1059				EN60730	
Volts 50/60 Hz	**24**	**120**	**208**	**240**	**24**	**230**
Horsepower	–	1	1	1	–	–
Full Load Amperes	–	16	10	10	–	8
Locked Rotor Amperes	–	96	60	60	–	48
Resistive Amperes	16	16	10	10	16	16
Pilot Duty VA	125	720	720	720	77	720

Table 3: UL Conformity Declaration Information

Information	Description
Purpose of Control	F263 Liquid Level Float Switch
Construction of Control	Electronic independently mounted control
Number of Cycles	100,000 cycles
Method of Mounting Control	Mounting to sensed media vessel/orientation
Type 1 or Type 2 Action	Type 1.C (Microinterruption)
External Pollution Situation	Pollution degree 4
Internal Pollution Situation	Pollution degree 2

Table 3: UL Conformity Declaration Information

Information	Description
Rated Impulse Voltage	4,000 VAC
Ball Pressure Temperature	**Enclosure:** 266°F (130°C) **Switch Component:** 252°F (122°C)
Control Adjustment Instruction	-
Field Wiring Rating	**Wire/Cord Temperature Ratings:** • 140°F (60°C) only permitted when ambient air and media are less than 113°F (45°C) • 167°F (75°C) only permitted when ambient air and media are less than 140°F (60°C) • 194°F (90°C) only permitted when ambient air is less than 140°F (60°C) and media is less than 167°F (75°C) • 302°F (150°C) permitted when ambient air is less than 140°F (60°C) and media is less than 249°F (121°C)
Vessel Pressure	**F263 Liquid Level Float Switch with Copper Float:** 100 psi (690 kPa) **F263 Liquid Level Float Switch with Polycarbonate Float:** 150 psi (1935 kPa)

Table 4: F263 Liquid Level Float Switches Technical Specifications

Specification	Description
Switch	SPDT
Enclosure	UL: Type 4 CE: IP67
Wiring Connections	Three color-coded screw terminals and one ground terminal
Conduit Connection	One 7/8 in. (22 mm) hole for 1/2 in. trade size (or PG16) conduit
Pipe Connector	1 in. 11-1/2 NPT threads
Minimum Tank Diameter	9 in. (229 mm)
Maximum Liquid Pressure	100 psig (690 kPa) for copper float 150 psig (1,035 kPa) for polycarbonate float
Liquid Temperature Range	Minimum: -40°F (-40°C) or liquid freezing point[1] Maximum: 212°F (100°C) polycarbonate, 250°F (121°C) copper[2]
Ambient Conditions	Minimum: -40°F (-40°C)[1] Maximum: 140°F (60°C)[2]
Compliance	**North America:** cULus Listed; UL 60730, File E6688; FCC Compliant to CFR47, Part 15, Subpart B, Class B Industry Canada (IC) Compliant to Canadian ICES-003, Class B limits
CE	**Europe:** CE Mark – Johnson Controls declares that this product is in compliance with the essential requirements and other relevant provisions of the EMC Directive and the Low Voltage Directive.

Table 4: F263 Liquid Level Float Switches Technical Specifications

Specification	Description
	Australia/New Zealand Mark: RCM Compliant

1 Ensure that the low liquid temperature combined with the low ambient temperature does not lead to the freezing the liquid inside the body (or bellows, where appropriate). Please observe the liquid freezing point.

2 At higher temperatures, the maximum allowed liquid temperature becomes lower. The temperature inside of the electrical switch should not exceed 158°F (70°C).

The performance specifications are nominal and conform to acceptable industry standards. For application at conditions beyond these specifications, consult Johnson Controls/PENN Refrigeration Application Engineering at 1-800-275-5676. Johnson Controls shall not be liable for damages resulting from misapplication or misuse of its products.

North American emissions compliance

United States

This equipment has been tested and found to comply with the limits for a Class B digital device, pursuant to Part 15 of the FCC Rules. These limits are designed to provide reasonable protection against harmful interference in a residential installation. This equipment generates, uses and can radiate radio frequency energy and, if not installed and used in accordance with the instructions, may cause harmful interference to radio communications. However, there is no guarantee that interference will not occur in a particular installation. If this equipment does cause harmful interference to radio or television reception, which can be determined by turning the equipment off and on, the user is encouraged to try to correct the interference by one or more of the following measures:

- Reorient or relocate the receiving antenna.
- Increase the separation between the equipment and receiver.
- Connect the equipment into an outlet on a circuit different from that to which the receiver is connected.
- Consult the dealer or an experienced radio/TV technician for help.

Canada

This Class (B) digital apparatus meets all the requirements of the Canadian Interference-Causing Equipment Regulations.

Cet appareil numérique de la Classe (B) respecte toutes les exigences du Règlement sur le matériel brouilleur du Canada.

Single point of contact

APAC	Europe	NA/SA
JOHNSON CONTROLS	JOHNSON CONTROLS	JOHNSON CONTROLS
C/O CONTROLS PRODUCT MANAGEMENT	WESTENDHOF 3	507 E MICHIGAN ST
NO. 32 CHANGJIJANG RD NEW DISTRICT	45143 ESSEN	MILWAUKEE WI 53202
WUXI JIANGSU PROVINCE 214028	GERMANY	USA
CHINA		

For more contact information, refer to www.johnsoncontrols.com/locations.

© 2019 Johnson Controls. All rights reserved. All specifications and other information shown were current as of document revision and are subject to change without notice.