Application

The CG series general purpose application controllers are well-suited for controlling a wide variety of facility and HVAC equipment, including fan coils, air handling units, packaged HVAC equipment, and central plant equipment. CG series controllers run pre-engineered and user-programmed applications.

CG series controllers include an integral real-time clock, which enables the controllers to monitor and control schedules, calendars, and trends, and operate for extended periods of time as standalone controllers when offline from the Facility Explorer system network. Certain models feature an integral color display with a navigation keypad that enables enhanced local monitoring and control of field equipment.

For CG series ordering information and accessories, refer to the *Facility Explorer CG, CV Series Equipment Controllers and XPM Expansion Modules Product Bulletin (LIT-12013225)*.

Communications Protocols

CG series controllers can communicate using multiple communication protocols depending on model and configuration. CGE controllers communicate using the BACnet® Secure Connect (BACnet/SC) or BACnet/IP communication protocol. CGM controllers communicate using the BACnet MS/TP, N2 or wireless communications protocols, with the addition of ZFR183x Pro Wireless Field Bus Routers.

Equipment controllers in BACnet/SC, BACnet/IP, or BACnet MS/TP communication mode are BACnet network-compliant devices. The BACnet protocol is a standard for ANSI, ASHRAE, and the International Standards Organization (ISO) for building controls.

Controllers running in N2 mode can be used to maintain or modernize sites with installed legacy Johnson Controls® controllers. For installation and commissioning support, and tips for efficient and safe replacement, refer to the *Modernization Guide for Legacy N2 Controllers (LIT-12012005)* and the controller-specific documentation. For information about mapping N2 Objects in controllers with switchable communications protocols, refer to the *N2 Compatibility Options* chapter of the *Controller Tool Help (LIT-12011147)*.

To configure CGM series controllers to communicate using the N2 communications protocol, see Configuring N2 communications (CGM models only).

To configure CGM controllers to communicate using the wireless communications protocol, see Configuring wireless communications (CGM models only).

North American Emissions Compliance

North American Emissions Compliance

This equipment has been tested and found to comply with the limits for a Class A digital device pursuant to Part 15 of the FCC Rules. These limits are designed to provide reasonable protection against harmful interference when this equipment is operated in a commercial environment. This equipment generates, uses, and can radiate radio frequency energy and, if not installed and used in accordance with the instruction manual, may cause harmful interference to radio communications. Operation of this equipment in a residential area may cause harmful interference, in which case the users will be required to correct the interference at their own expense.

Canada

This Class (A) digital apparatus meets all the requirements of the Canadian Interference-Causing Equipment Regulations.

Cet appareil numérique de la Classe (A) respecte toutes les exigences du Règlement sur le matériel brouilleur du Canada.

Installation

Observe the following guidelines when you install the controller:

- To minimize vibration and shock damage to the controller, transport the controller in the original container.
- Verify that all parts shipped with the controller.
- Do not drop the controller or subject it to physical shock.

Parts included

- One CGM/CGE controller with removable terminal blocks (Input/Output, Power, FC, and SA Bus terminal blocks are removable)
- One F4-CG Pack Sheet (Part No. A1638165JV)

Note: The FC terminal block is only available with the CGM model.

Materials and special tools needed

- Three fasteners appropriate for the mounting surface (M4 screws or #8 screws)
- One 20 cm (8 in.) or longer piece of 35 mm DIN rail and appropriate hardware for DIN rail mount (only)
- Small straight-blade (1/8 in. or 3.0 mm) or Philips #1 screwdriver for securing wires in the terminal blocks

Device diagram

The following figures display the physical features of the CGM and CGE controllers, and the accompanying table provides a description of the physical features and a reference to further information where required.

Figure 1: CGM physical features (CGM09090-0H model shown)

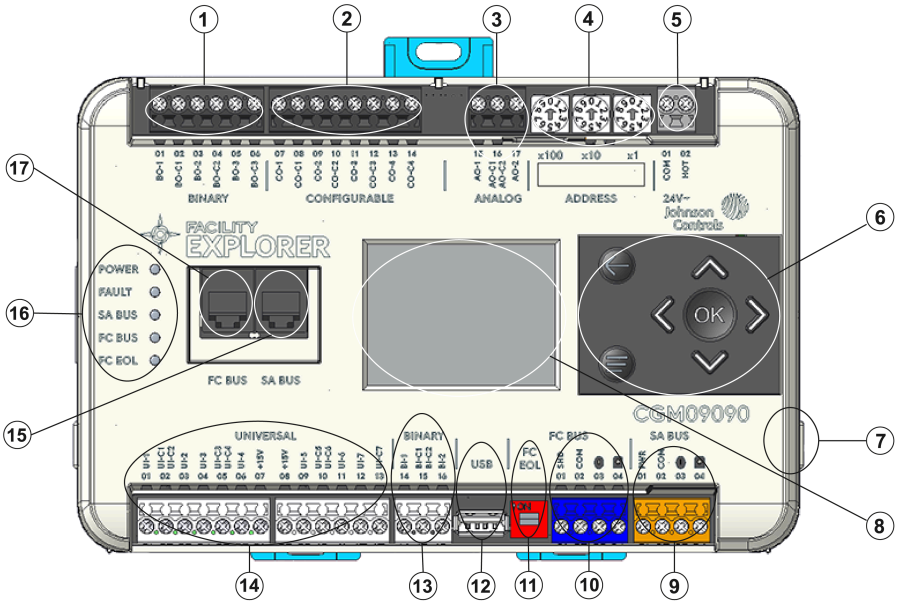

Figure 2: CGE physical features

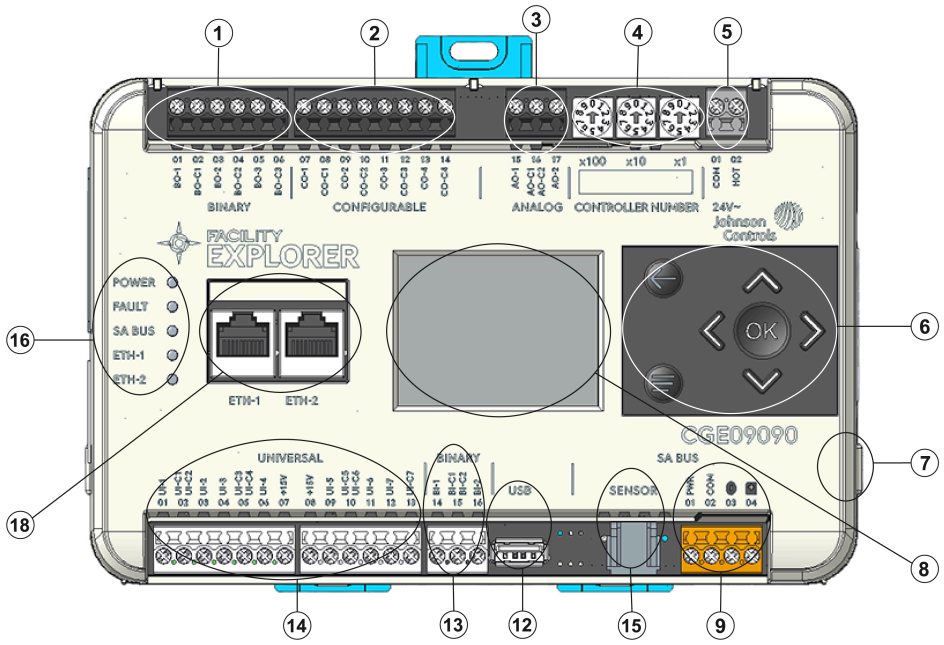

Table 1: Physical features of CGx series controllers

	Physical feature: description and references
1	Binary Outputs (BO) Terminal Block: Black terminals. See Table 4.
2	Configurable Outputs (CO) Terminal Block: Black terminals. See Table 4.
3	Analog Output (AO) Terminal Block: Black terminals. Only present on CGM09090 and CGE09090 models. See Table 4.

Table 1: Physical features of CGx series controllers

	Physical feature: description and references
4	Rotary Switch Block: **CGM:** Decimal Addressing. See Setting the device address on CGM models. **CGE:** Controller Number. See Setting the controller number for CGE models
5	Supply Power Terminal Block: Gray terminals; 24 VAC, Class 2. See Supply power terminal block.
6	Keypad with Directional Arrows, Back, and Menu Buttons (only available on models with product codes ending in -0H)
7	Cover Lift Tab. See Removing the controller cover.
8	Color display screen (only available on models with product codes ending in -0H)
9	Sensor Actuator (SA) Bus Terminal Block: Orange terminal. See SA Bus terminal block.
10	Field Controller (FC) Bus Terminal Block: Blue terminal. See FC Bus terminal block on CGM controllers.
11	End-of-Line (EOL) Switch. See Setting the End-of-Line (EOL) switch (CGM models only).
12	Binary Input (BI) Terminal Block: White terminals. See Table 4.
13	Universal Inputs (UI) Terminal Block: White terminals. See Table 4.
14	Sensor (SA Bus) Port: RJ-12 6-Pin Modular Jack. See Sensor (SA Bus) port.
15	LED Status Indicators. See LED status and states.
16	FC Bus Port RJ-12 6-pin Modular Jack. See FC Bus port on CGM controllers.
17	Ethernet Ports: ETH-1 and ETH-2. See BACnet/SC or BACnet/IP Ethernet Network Topology for CGE controllers

Mounting

Observe the following guidelines when mounting a controller:

- Ensure the mounting surface can support the controller, DIN rail, and any user-supplied enclosure.
- Mount the controller horizontally on 35 mm DIN rail whenever possible.
- Mount the controller in the proper mounting position.
- Mount the controller on a hard, even surface whenever possible in wall-mount applications.
- Use shims or washers to mount the controller securely and evenly on the mounting surface.
- Mount the controller in an area free of corrosive vapors and observe the Ambient Conditions requirements in Table 13.
- Provide for sufficient space around the controller for cable and wire connections for easy cover removal and good ventilation through the controller (50 mm [2 in.] minimum on the top, bottom, and front of the controller).
- Do not mount the controller on surfaces prone to vibration, such as ductwork.
- Do not mount the controller in areas where electromagnetic emissions from other devices or wiring can interfere with controller communication.

On panel or enclosure mount applications, observe the following additional guidelines:

- Mount the controller so that the enclosure walls do not obstruct cover removal or ventilation through the controller.
- Mount the controller so that the power transformer and other devices do not radiate excessive heat to the controller.
- Do not install the controller in an airtight enclosure.

Figure 3: Controller mounting position

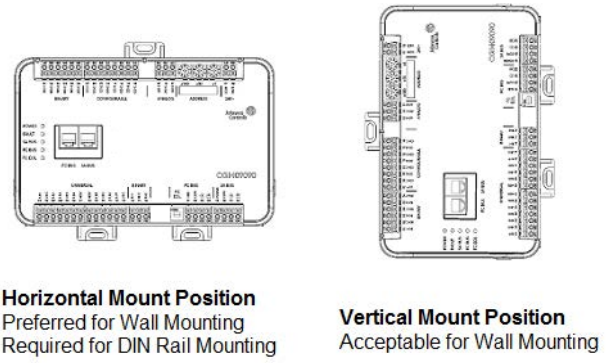

Horizontal Mount Position
Preferred for Wall Mounting
Required for DIN Rail Mounting

Vertical Mount Position
Acceptable for Wall Mounting

Mounting features and dimensions

Figure 4: Back of CGE09090 and CGM09090 controller

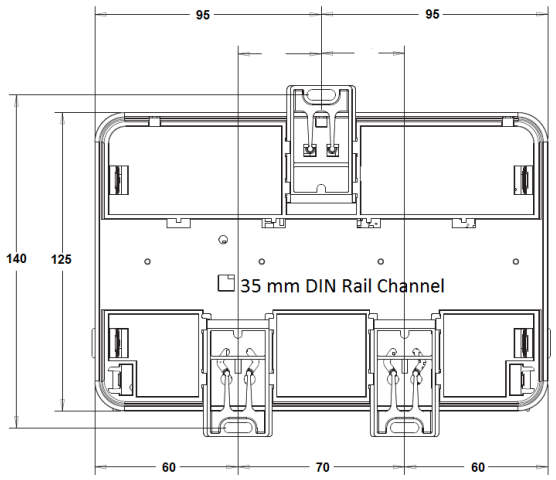

Figure 5: Back of CGE04060 and CGM04060 controller

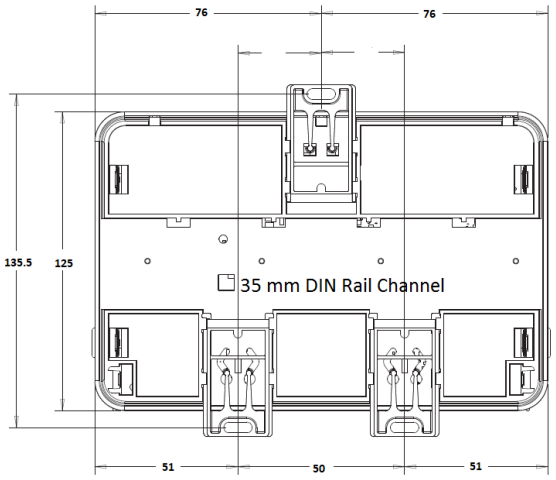

Note:

- Mounting dimensions are listed in millimeters in the above figures.
- The DIN rail channel and the mounting clips are shown in an extended position.

DIN rail mount applications

To mount a controller horizontally on a 35 mm DIN rail (recommended method), complete the following steps:

1. Securely mount a 20 cm (8 in.) or longer section of 35 mm DIN rail horizontal and centered in the desired space so that the controller mounts in the **horizontal** position.
2. Pull the two bottom mounting clips outward from the controller to the extended position (Figure 4 or Figure 5).
3. Hang the controller on the DIN rail by the hooks at the top of the (DIN rail) channel on the back of the controller (Figure 4 or Figure 5), and position the controller snugly against the DIN rail.
4. Push the bottom mounting clips inward (up) to secure the controller on the DIN rail. To remove the controller from the DIN rail, pull the bottom mounting clips out to the extended position and carefully lift the controller off the DIN rail.

Wall mount applications

To mount a controller directly on a wall or other flat vertical surface, complete the following steps:

1. Pull the two bottom mounting clips outward and ensure they are locked in the extended position as shown in Figure 4 or Figure 5.
2. Determine the proper mounting position the controller will be installed. Mark the mounting hole locations on the wall using the dimensions for the controller listed in Mounting features and dimensions, or hold the controller up to the wall or surface in a proper mount position and mark the hole locations through the mounting clips.
3. Drill holes in the wall or surface at the marked locations, and insert appropriate wall anchors in the holes (if necessary).
4. Hold the controller in place, and insert the screws through the mounting clips and into the holes (or anchors). Carefully tighten all of the screws.

   Important: Do not over-tighten the mounting screws. Over-tightening the screws may damage the mounting clips.

Wiring

Observe the following guidelines when wiring a CGM/CGE controller:

CAUTION

Risk of Electric Shock:

Disconnect the power supply before making electrical connections to avoid electric shock.

ATTENTION

Mise En Garde: Risque de décharge électrique:

Débrancher l'alimentation avant de réaliser tout raccordement électrique afin d'éviter tout risque de décharge électrique.

CAUTION

Risk of Property Damage:

Do not apply power to the system before checking all wiring connections. Short circuited or improperly connected wires may result in permanent damage to the equipment.

ATTENTION

Mise En Garde: Risque de dégâts matériels:

Ne pas mettre le système sous tension avant d'avoir vérifié tous les raccords de câblage. Des fils formant un court-circuit ou connectés de façon incorrecte risquent d'endommager irrémédiablement l'équipement.

- **Important:** Do not exceed the controller electrical ratings. Exceeding controller electrical ratings can result in permanent damage to the controller and void any warranty.
- **Important:** Use copper conductors only. Make all wiring in accordance with local, national, and regional regulations.
- **Important:** Electrostatic discharge can damage controller components. Use proper electrostatic discharge precautions during installation, setup, and servicing to avoid damaging the controller.

For information on configuring and wiring a BACnet/SC or BACnet/IP network, refer to the *Facility Explorer IP Networks for BACnet/IP Controllers Configuration Guide (LIT-12012980)*. For detailed information about configuring and wiring an MS/TP Bus, FC Bus, and SA Bus, refer to the *FX MS/TP Communications Bus Technical Bulletin (LIT-12011670).*. For detailed information about wiring an N2 network, refer to the *N2 Communications Bus Technical Bulletin (LIT-636018)*.

Terminal blocks and bus ports

See Device diagram for terminal block and bus port locations on the CGM/CGE controller. Observe the following guidelines when wiring a CGM/CGE controller.

Method for tightening terminal blocks

- **Important:** Remove power from the controller before beginning this procedure. Failure to de-energize the controller can result in equipment damage.
- **Important:** It is best practice to remove the terminal block from the pin headers on the unit before wiring the terminal blocks. See Removing a terminal block.

Do not use more force than is necessary when tightening the terminal block screws. To prevent applying excessive force when tightening the screws, apply the following steps:

1. Tighten the terminal screws until the screw is snug on the wire, and then tighten the screw an additional quarter (90°) to half (180°) turn.
2. Only use enough downward force necessary to keep the screwdriver bit engaged with the screw. Too much downward force while tightening the terminal screws can damage the terminal.

   If a terminal block exhibits any symptoms of damage, replace the terminal block. For detailed information about replacing terminal blocks, refer to the *Terminal Block Retrofit Installation Guide (LIT-12014622).* See the following table for replacement terminal block kits:

Table 2: Terminal block replacement part numbers

Product code number	Description
ACC-TBKPWFCSA-1	Power, FC Bus, and SA Bus terminal block replacement kit for SNE, CG series, CV series, CC series, and XPM products. Kit includes 5 of each terminal block type. 15 terminal blocks in total. Power is grey, SA Bus is orange, FC Bus is blue, and all are unnumbered.
ACC-TBKIO234-1	Input and Output terminal block replacement kit for SNC, CG series, CV series, CC series, and XPM products. Kit includes 10 of each 2, 3, and 4 position Input and Output terminal blocks. 30 terminal blocks in total. All black and unnumbered.
ACC-TBKIO678-1	Input and Output terminal block replacement kit for SNC, CG series, CV series, CC series, and XPM products. Kit includes 5 of each 6, 7, and 8 position Input and Output terminal blocks. 15 terminal blocks in total. All black and unnumbered.

Input and Output terminal blocks

CG series controllers have removable input and output terminal blocks. All of the input terminal blocks are located on the bottom of the controller, and the output terminal blocks are located on the top of the controller. For information about removing a terminal block, see Removing a terminal block. For more information about I/O terminal functions, requirements, and ratings, see Terminal wiring guidelines, functions, ratings, and requirements.

BACnet/SC or BACnet/IP Ethernet Network Topology for CGE controllers

CGE controllers may be connected to a BACnet/SC or BACnet/IP building automation network in multiple ways: as daisy-chained devices, as part of a star (also called home run) type network, or as part of a ring network.

To daisy-chain CGE controllers, connect the controllers to the bus supervisor in a chain with the Ethernet cable connecting to the CGE at the ETH-1 or ETH-2 port, and connecting to the next device from the other port. Benefits of daisy-chained networks are that they require less physical wiring and new devices can be added easily to the network.

In a star network, each CGE controller is connected by Ethernet cable directly back to a main switch. This configuration reduces the possibility of network failure but requires more wiring to install.

A ring network is a chain of controllers virtually closed by a software component in an Ethernet switch. Not all switches support the ring topology. The dual-port controller from Johnson Controls supports Media Redundancy Protocol (MRP). With MRP, a ring of Ethernet devices can overcome any single communication failure, with a recovery time faster than a non-ring (daisy chain or star) architecture.

For more information on network topologies for IP Controllers, see *Facility Explorer IP Networks for BACnet/IP Controllers Configuration Guide (LIT-12012980).*

FC Bus terminal block on CGM controllers

The FC Bus terminal block is a blue, removable, 4-pin terminal block that fits into a board-mounted pin header.

When connecting the CGM to the FC Bus, wire the bus terminal blocks on the controller and other FC Bus devices in a daisy-chain configuration using 3-wire twisted, shielded cable as shown in Figure 6. For more information about FC Bus terminal functions, requirements, and ratings, see Table 6.

Figure 6: FC Bus terminal block wiring

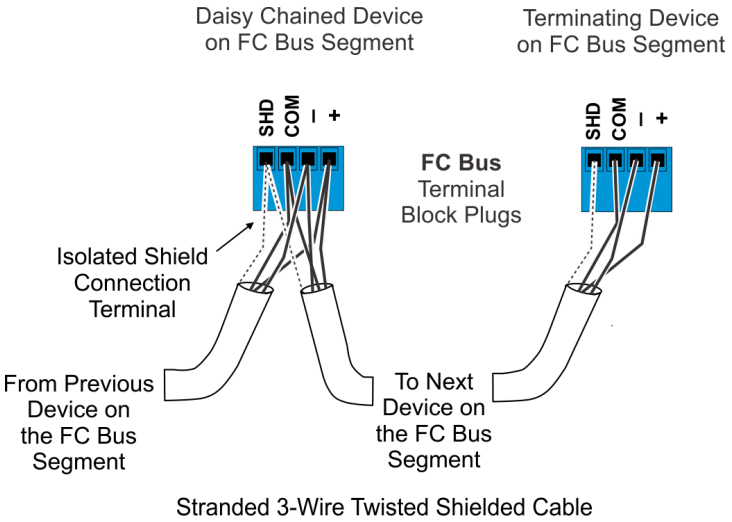

Note: The FC Bus Shield (SHD) terminal is isolated and can be used to connect (daisy chain) the shields for FC Bus wiring.

SA Bus terminal block

The SA Bus terminal block is an orange, removable, 4-pin terminal block that fits into a board-mounted pin header.

When connecting an SA Bus device to the controller, wire the SA Bus terminal block on the controller and other SA Bus devices in a daisy-chain configuration using 4-wire twisted, shielded cable as shown in Figure 7. See Terminal wiring guidelines, functions, ratings, and requirements for more information about communication bus terminal block functions, ratings, and requirements.

Figure 7: SA Bus Terminal Block Wiring

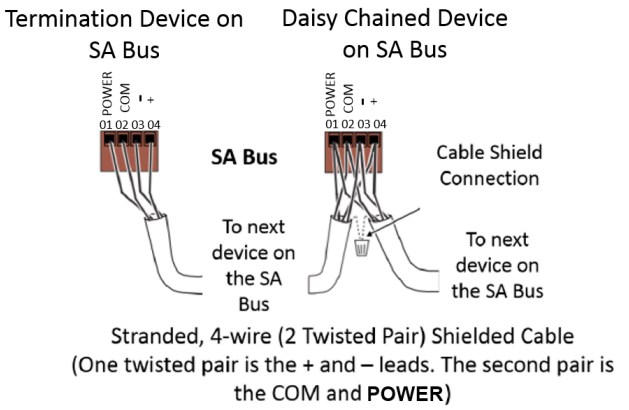

Note: The POWER terminal supplies 15 VDC. The POWER terminal can be used to connect (daisy chain) the 15 VDC power leads on the SA Bus.

Note: Do not use the modular SA Bus port and the terminal block SA Bus simultaneously. Only use one of these connections at a time.

Note: The CGM/CGE controller is the EOL for the SA Bus.

FC Bus port on CGM controllers

The FC Bus port on the front of the CGM controller is an RJ-12, 6-position modular jack that provides a connection for the Connected Workflow Wireless MS/TP Converter (CWCVT), the Mobile Access Portal (MAP) Gateway, or the ZFR Pro Wireless Field Bus Router.

The FC Bus port is connected internally to the FC bus terminal block. See Table 6 for more information about communication bus port functions, ratings, and requirements. The FC Bus port pin assignment is shown in Figure 8.

Figure 8: Pin number assignments for FC Bus and SA Bus ports on equipment controllers

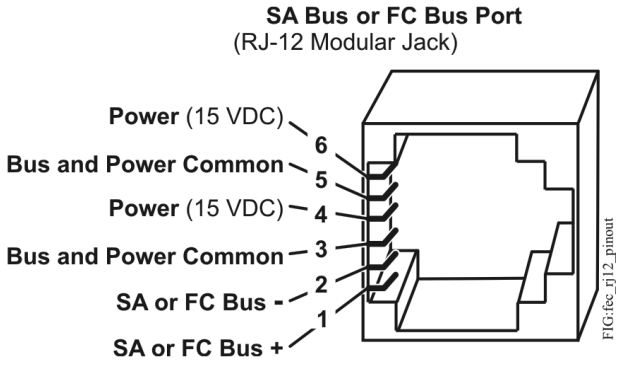

Sensor (SA Bus) port

The SA Bus port is an RJ-12, 6-position modular jack that provides a connection for the CWCVT, the MAP Gateway, the VAV Balancing Tool, the DLK0350, specified network sensors, or other SA Bus devices with RJ-12 plugs. When the controller is configured for N2 network communication, you must download and commission the controller using the SA Bus port.

The Sensor port is connected internally to the SA Bus terminal block. See Table 6 for more information about communication bus port functions, ratings, and requirements. The SA Bus port pin assignment is shown in Figure 8.

Supply power terminal block

The 24 VAC supply power terminal block is a gray, removable, 2-pin terminal block that fits into a board-mounted pin header on the top right of the controller.

Wire the 24 VAC supply power wires from the transformer to the HOT and COM terminals on the terminal plug as shown in Figure 9. For more information about the Supply Power Terminal Block, see Table 6.

Figure 9: 24 VAC supply power terminal block wiring

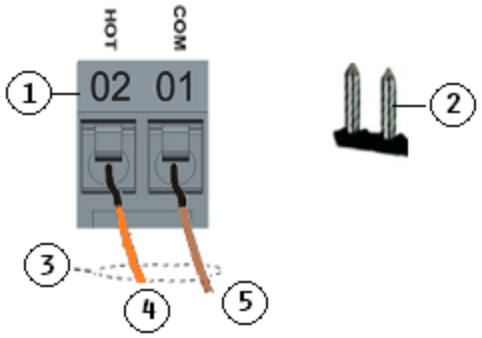

Note: The order of the HOT and COM terminals on the CG series controllers is reversed from the order of the terminals on the CV series controllers.

Table 3: Supply power terminal block wiring

	Description
1	Supply power terminal block
2	Supply power terminal header
3	Wires from Johnson Controls 24 VAC, class 2 power transformer
4	24 VAC (Orange wire)
5	COM (Brown wire)

Note: The supply power wire colors may be different on transformers from other manufacturers. Refer to the transformer manufacturer's instructions and the project installation drawings for wiring details.

Important: Connect 24 VAC supply power to the equipment controller and all other network devices so that transformer phasing is uniform across the network devices. Powering network devices with uniform 24 VAC supply power phasing reduces noise, interference, and ground loop problems. The equipment controller does not require an earth ground connection.

Important: Power wires must be less than 30 meters (100 ft) between controller and transformer

Terminal wiring guidelines, functions, ratings, and requirements

This section provides further guidelines on input and output wiring, maximum cable length versus load current, and SA Bus and supply power wiring.

For information about removing a terminal block from the controller, see Removing a terminal block.

Input and Output wiring guidelines

Table 4 provides information and guidelines about the functions, ratings, and requirements for the controller input and output terminals, and Table 4 also references guidelines for determining proper wire sizes and cable lengths.

In addition to the wiring guidelines in Table 4, observe the following guidelines when wiring controller inputs and outputs:

- Run all low-voltage wiring and cables separate from high-voltage wiring.
- All input and output cables, regardless of wire size or number of wires, must consist of twisted, insulated, and stranded copper wires.
- Shielded cable is not required for input or output cables but is recommended for input and output cables that are exposed to high electromagnetic or radio frequency noise.
- Cable runs of less than 30 m (100 ft) often do not require an offset in the input/output software setup.
- Cable runs over 30 m (100 ft) often require an offset in the input/output software setup.

I/O terminal block functions, ratings, and requirements

Table 4: I/O terminal block functions, ratings, requirements, and cable guidelines

Terminal Block label	Terminal label	Function, ratings, requirements	Determine wire size and maximum cable length
UNIVERSAL (Inputs)	**+15 V**	**15 VDC Power Source** for active (3-wire) input devices connected to the Universal **UI-*n*** terminals. Provides 100 mA total current	Same as (Universal) **UI-*n*** ⓘ **Note:** Use 3-wire cable for devices that source power from the +15V terminal.
	UI-*n*	**Analog Input - Voltage Mode (0–10 VDC)** 10 VDC maximum input voltage Internal 10k ohm Pull-down	See Guideline **A** in Table 5
		Analog Input - Current Mode (4–20 mA) Internal 100 ohm load impedance ⓘ **Note:** Current loop jumpers must be in the Enabled position to maintain a closed 4-20 mA current loop. See Setting the UI current loop jumpers.	See Guideline **B** in Table 5.
		Analog Input - Resistive Mode (0–600k ohm) Internal 12 V. 15k ohm pull up Qualified Sensors: 0-2k ohm potentiometer, RTD (1k Nickel [Johnson Controls® sensor], 1k Platinum, and A99B Silicon Temperature Sensor) Negative Temperature Coefficient (NTC) Sensor	See Guideline **A** in Table 5.
		Binary Input - Dry Contact Maintained Mode 1 second minimum pulse width Internal 12 V. 15k ohm pull up	See Guideline **A** in Table 5.
	UI-C or **UI-C*n***	**Universal Input Common** for all Universal Input terminals ⓘ **Note:** All Universal UI-C or UI-C*n* terminals share a common, which is isolated from all other commons.	Same as (Universal) **UI-*n***
BINARY (Inputs)	**BI-*n***	**Binary Input - Dry Contact Maintained Mode** 0.01 second minimum pulse width Internal 18 V. 3k ohm pull up	See Guideline **A** in Table 5.
		Binary Input - Pulse Counter/Accumulator Mode 0.01 second minimum pulse width (50 Hz at 50% duty cycle) Internal 18 V. 3k ohm pull up	
	BI-C or **BI-C*n***	**Binary Input Common** for all Binary Input terminals ⓘ **Note:** All Binary BI-C or BI-C*n* terminals share a common, which is isolated from all other commons, except the Configurable Output (CO) common when the CO is defined as an Analog Output.	

Table 4: I/O terminal block functions, ratings, requirements, and cable guidelines

Terminal Block label	Terminal label	Function, ratings, requirements	Determine wire size and maximum cable length
CONFIGURABLE (Outputs)	**CO-***n*	**Analog Output - Voltage Mode (0–10 VDC)** 10 VDC maximum output voltage 10 mA maximum output current Requires an external load of 1,000 ohm or more. ⓘ **Note:** In instances where the input impedance load exceeds 100k ohm, install a 2k ohm resistor in parallel to the common and 0-10 VDC signal.	See Guideline **A** in Table 5.
		Binary Output - 24 VAC Triac (External Power Source only) Connects CO*n* to CO-C or CO-C*n* when activated. External Power Source Requirements: 24 VAC maximum output voltage 0.5 A maximum output current 40 mA minimum load current	See Guideline **C** in Table 5.
	CO-C or **CO-C***n*	**Analog Output Signal Common** All Configurable Outputs (COs) defined as Analog Outputs (AOs) share a common, which is isolated from all other commons except the Binary Input common. **Binary Output Signal Common** All Configurable Outputs (COs) defined as Binary Outputs are isolated from all other commons, including other CO commons.	Same as (Configurable) **CO-***n*.
ANALOG (Outputs)	**AO-***n*	**Analog Output - Voltage Mode (0–10 VDC)** 10 VDC maximum output voltage 10 mA maximum output current Required an external load of 1,000 ohm or more. ⓘ **Note:** The Analog Output (AO) operates in the Voltage Mode when connected to devices with impedances greater than 1,000 ohm. Devices that drop below 1,000 ohm may not operate as intended for Voltage Mode applications.	See Guideline **C** in Table 5.
		Analog Output - Current Mode (4–20 mA) Requires and external load between 0 and 300 ohm. ⓘ **Note:** The Analog Output (AO) operates in the Current Mode when connected to devices with impedances less than 300 ohm. Devices with impedances greater than 300 may not operate as intended for Current Mode applications.	
	AO-C or **AO-C***n*	**Analog Output Signal Common** for all Analog Output terminals. ⓘ **Note:** All Analog Output Common terminals share a common, which is isolated from all other commons.	
BINARY (Output)	**BO-***n*	**Binary Output - 24 VAC Triac** (External Power Source) Connects BO-*n* to BO-C or BO-C*n* when activated. External Power Source Requirements: 24 VAC maximum output voltage 0.5 A maximum output current 40 mA minimum load current	See Guideline **C** in Table 5.
	BO-C or **BO-C***n*	**Binary Output Common** for all Binary Output terminals. ⓘ **Note:** Each Binary Output Common terminal is isolated from **all** other commons, including other Binary Output Common terminals.	

Cable and wire length guidelines

Table 5 defines cable length guidelines for the various wire sizes that may be used for wiring low-voltage (<30 V) input and outputs. The required wire sizes and lengths for high-voltage (>30 V) Relay Outputs are determined by the load connected to the relay, and local, national or regional electrical codes.

Table 5: Cable length guidelines

Guideline	Wire size/Gauge and type	Maximum cable length and type	Assumptions
A	1.0 mm (18 AWG) stranded copper	457 m (1,500 ft) twisted wire	100 mV maximum voltage drop Depending on the cable length and the connected input or output device, you may have to define an offset in the setup software for the input or output point.
	0.8 mm (20 AWG) stranded copper 297 m (975 ft) twisted wire	297 m (975 ft) twisted wire	
	0.6 mm (22 AWG) stranded copper 183 m (600 ft) twisted wire	183 m (600 ft) twisted wire	
	0.5mm (24 AWG) stranded copper 107 m (350 ft) twisted wire	107 m (350 ft) twisted wire	
B	1.0 mm (18 AWG) stranded copper	229 m (750 ft) twisted wire	100 mV maximum voltage drop Depending on the cable length and the connected input or output device, you may have to define an offset in the setup software for the input or output point.
	0.8 mm (20 AWG) stranded copper 297 m (975 ft) twisted wire	137 m (450 ft) twisted wire	
	0.6 mm (22 AWG) stranded copper 183 m (600 ft) twisted wire	91 m (300 ft) twisted wire	
	0.5 mm (24 AWG) stranded copper 107 m (350 ft) twisted wire	61 m (200 ft) twisted wire	
C	See Figure 10 to select wire size/gauge. Use stranded copper wire.	See Figure 10 to determine cable length. Use twisted wire cable.	N/A

Maximum cable length versus load current

Use the following figure to estimate the maximum cable length relative to the wire size and the load current (in mA) when wiring inputs and outputs.

Note: Figure 10 applies to low-voltage (<30 V) inputs and outputs only.

Figure 10: Maximum wire length for low-voltage (<30 V) Inputs and Outputs by current and wire size

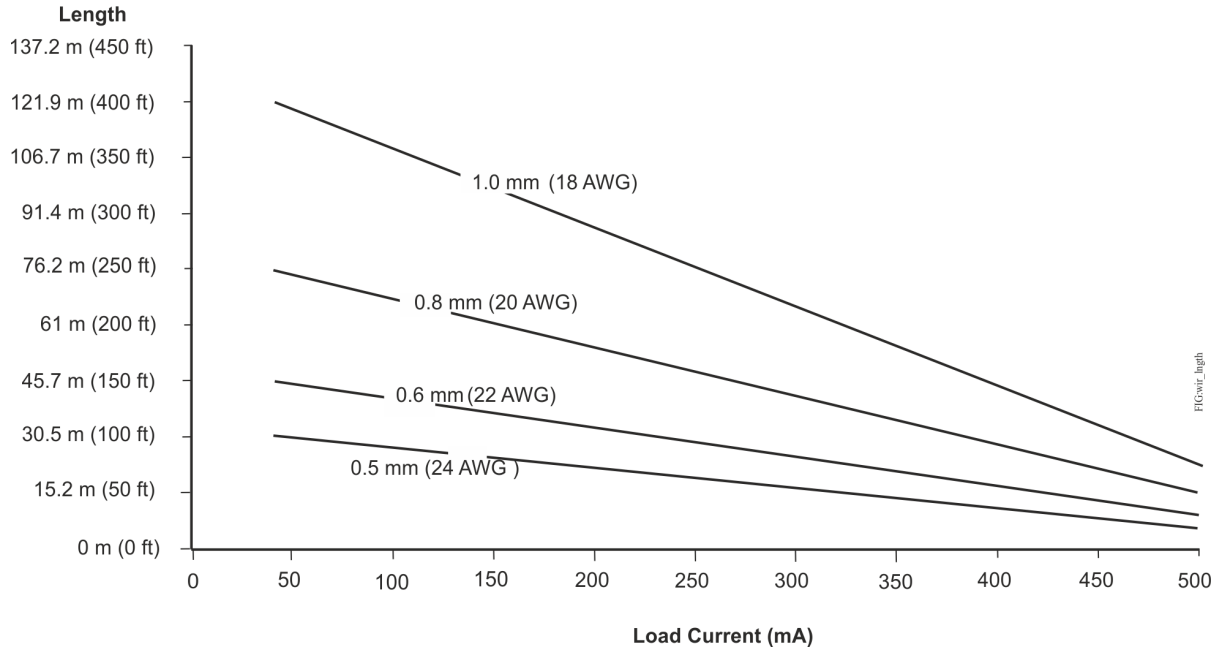

Communications bus and supply power wiring guidelines

Table 6 provides information about the functions, ratings, and requirements for the communication bus and supply power terminals. The table also provides guidelines for wire sizes, cable types, and cable lengths for wiring the controller's communication buses and supply power.

Important: Refer to the *N2 Modernization Guide for Legacy N2 Controllers (LIT-12012045)* for guidelines when you use this device on an N2 bus.

In addition to the guidelines in Table 6, observe the following guidelines when wiring an FC Bus, SA bus or the 24 VAC supply power:

- Run **all** low-voltage wiring and cables separate from high-voltage wiring.
- All FC and SA bus cables, regardless of wire size, should be twisted, insulated, stranded copper wire.
- Shielded cable is strongly recommended for all FC and SA bus cables.
- Refer to the *FX-PC Series Controllers MS/TP Communications Bus Technical Bulletin (LIT-12011670)* for detailed information regarding wire size and cable length requirements for FC and SA buses.

Communications bus and supply power terminal blocks, ratings, and requirements

Table 6: Communications bus and supply power terminal blocks, functions, ratings, requirements, and cable guidelines

Terminal block/Port label	Terminal labels	Function, electrical ratings/ Requirements	Recommended cable type
Ethernet (Ports) (CGE models)	**ETH-1** and **ETH-2**	Connect to BACnet/SC or BACnet/IP Network	Ethernet ports; 10/100 Mbps; 8-pin RJ-45 connector
FC BUS (CGM models)	**+** **-**	FC Bus Communications	0.6 mm (22 AWG) stranded, 3-wire twisted, shielded cable recommended
	COM	Signal Reference (Common) for Bus communications	
	SHD	Isolated terminal	
FC BUS (Port) (CGM models)	**FC Bus**	RJ-12 6-Position Modular Connector provides: • FC Bus Communications • FC Bus Signal Reference and 15 VDC Common • 15 VDC, 180 mA, Power for MAP Gateway or ZFR Pro Wireless Router	24 AWG 3-pair CAT 3 Cable <30.5 m (100 ft)
SA BUS	**+** **-**	SA Bus Communications	0.6 mm (22 AWG) stranded, 4-wire (2 twisted-pairs), shielded cable recommended. **Note:** The + and - wire are one twisted pair, and the COM and POWER are the second twisted pair of wires.
	COM	SA Bus Signal Reference and 15 VDC Common	
	POWER	15 VDC Supply Power for Devices on the SA Bus (Maximum total current draw for SA Bus is 240 mA.)	
SA BUS (Port)	**SA BUS (CGM)** **Sensor (CGE)**	RJ-12 6-Position Modular Connector provides: • SA Bus Communications • SA Bus Signal Reference and 15 VDC Common • 15 VDC Power for devices on the SA Bus	24 AWG 3-pair CAT3 cable <30.5 m (100 ft)
24V~	**HOT**	**24 VAC Power Supply - Hot** Supplies 20–30 VAC (Nominal 24 VAC)	0.8 mm to 1.0 mm (18 AWG) 2-wire < 30 m (100 ft)
	COM	**24 VAC Power Supply Common** (Isolated from all other Common terminals on controller) 14 VA	

ⓘ **Note:** See Input and Output wiring guidelines to determine wire size and cable lengths for cables other than the recommended cables.

ⓘ **Note:** The FC Bus and SA Bus wiring recommendations in this table are for MS/TP Bus communications at 38.4k baud. For more information, refer to the *MS/TP Communications Bus Technical Bulletin (LIT-12011034)*.

Termination diagrams

A set of Johnson Controls termination diagrams provides details for wiring inputs and outputs to the controllers. See the figures in this section for the applicable termination diagrams.

ⓘ **Note:** The CGM04060 and CGE04060 models do not have analog outputs. References to the analog output apply to the CGM09090 and CGE09090 models only.

Table 7: Termination details

Type of field device	Type of Input/ Output	Termination diagrams
Temperature Sensor	UI	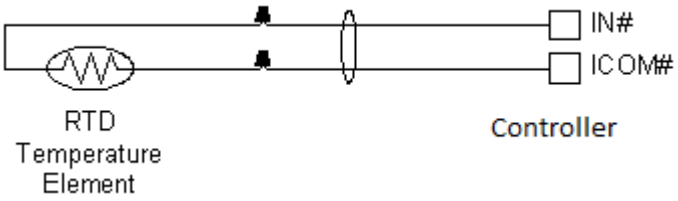
Voltage Input - External Source	UI	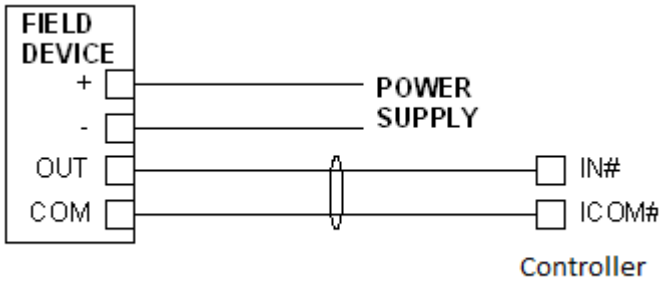
Voltage Input - Internal Source	UI	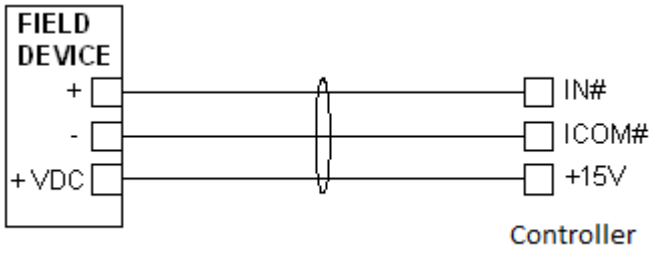
Voltage Input (Self-Powered)	UI	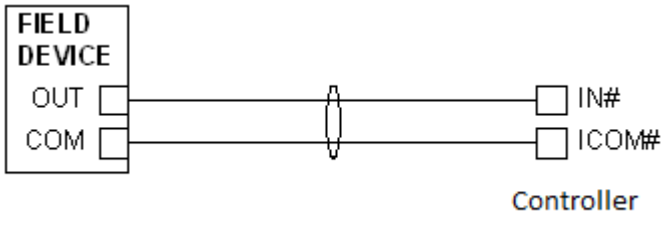

Table 7: Termination details

Type of field device	Type of Input/ Output	Termination diagrams
Current Input - External Source (Isolated)	UI	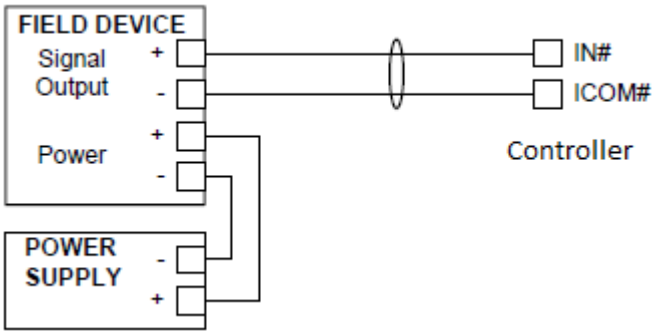
Current Input - Internal Source (2-wire)	UI	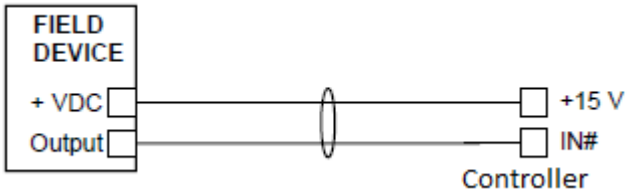
Current Input - Internal Source (3 wire)	UI	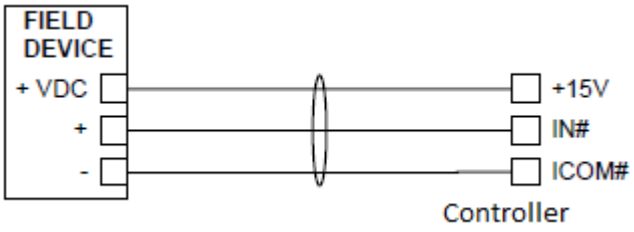
Current Input - External Source (in Loop)	UI	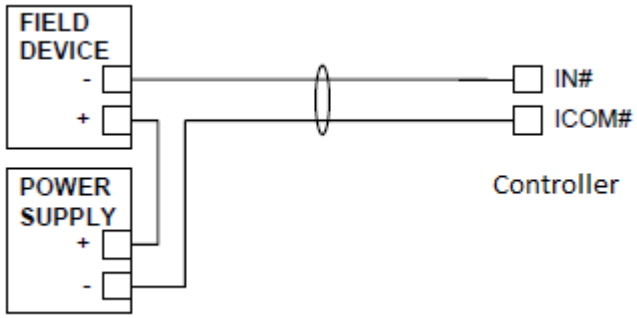
Feedback from EPP-1000	UI	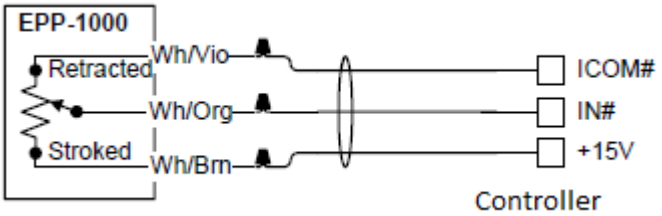

Table 7: Termination details

Type of field device	Type of Input/ Output	Termination diagrams
Dry Contact (Binary Input)	UI or BI	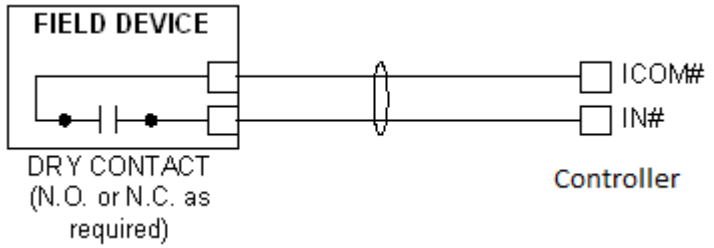
0–10 VDC Output to Actuator (External Source)	CO or AO	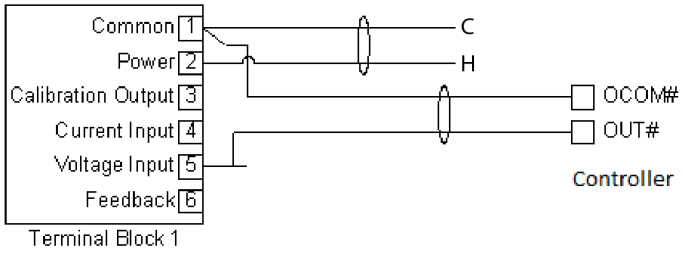
0–10 VDC Output to Actuator (Internal Source)	CO or AO	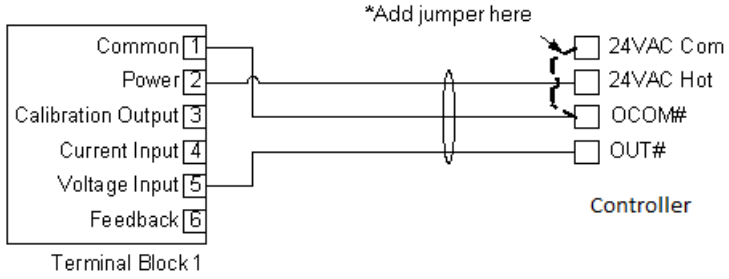
24 VAC Triac Output (Switch Low, External Source)	CO or BO	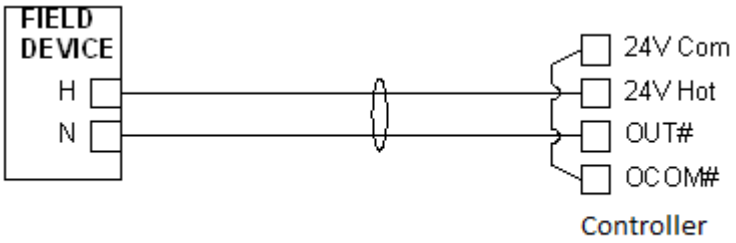
24 VAC Triac Output (Switch High, External Source)	CO or BO	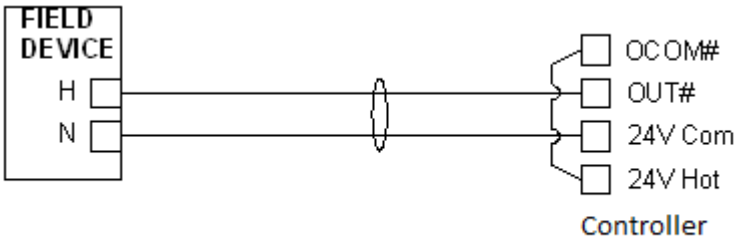

Table 7: Termination details

Type of field device	Type of Input/ Output	Termination diagrams
Analog Output (Current)	AO	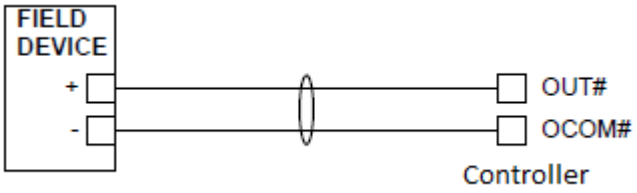
4–20 mA Output to Actuator (Internal Source)	AO	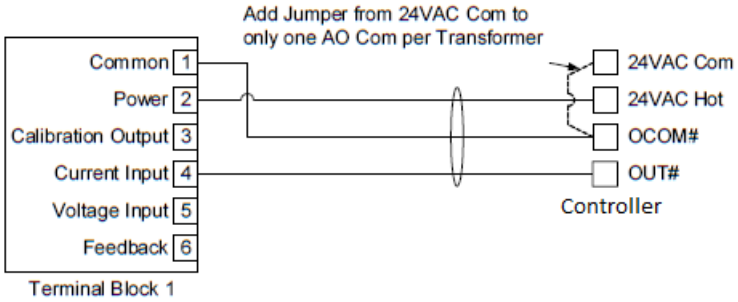
4–20 mA Output to Actuator (External Source)	AO	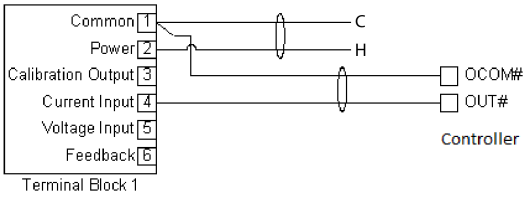
Incremental Control to Actuator (Switch Low, Externally Sourced)	BO or CO	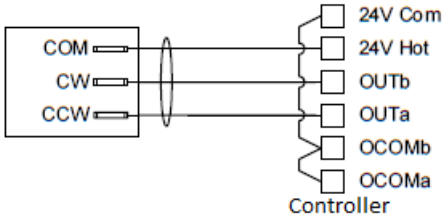
24 VAC Binary Output (Switch Low, Externally Sourced)	BO	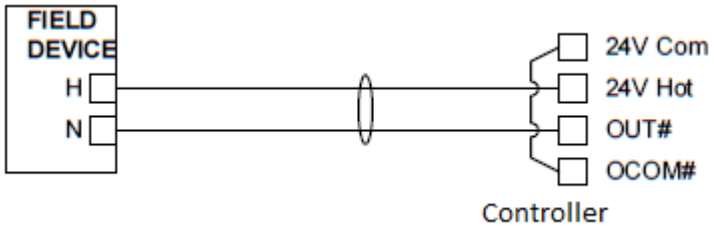

Table 7: Termination details

Type of field device	Type of Input/ Output	Termination diagrams
24 VAC Binary Output (Switch High, Externally Sourced)	BO	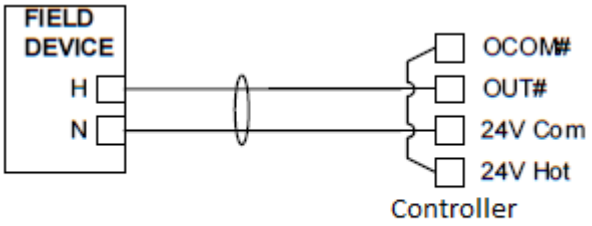
Incremental Control to Actuator (Switch High, Externally Sourced)	BO or CO	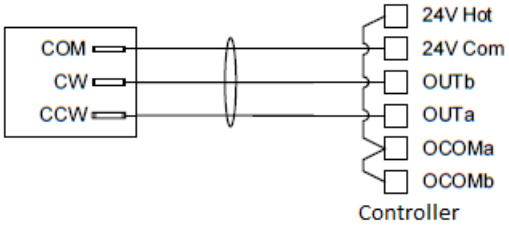
Network Stat with Phone Jack (Fixed Address = 199)	SA Bus	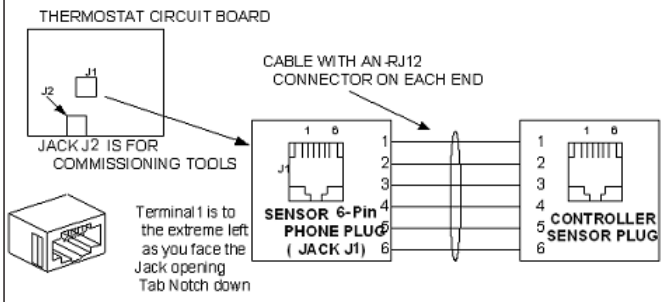 **Note:** The bottom jack (J2) on the TE-700 and TE-6x00 Series Sensors is not usable as a zone bus or an SAB connection.

Table 7: Termination details

Type of field device	Type of Input/ Output	Termination diagrams
Network Stat with Terminals Addressable	SA Bus	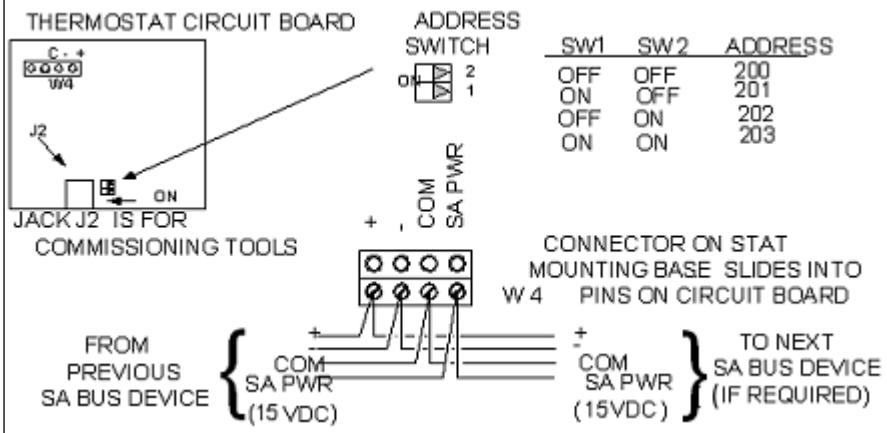 **Note:** The above diagram is for the NS7000 series thermostats. For NS8000 network sensor addressing, refer to the *NS8000 Series Network Sensors Installation Guide (Part No. 24-11256-00007)*.
Network Stat with Terminals (Fixed Address = 199)	SA Bus	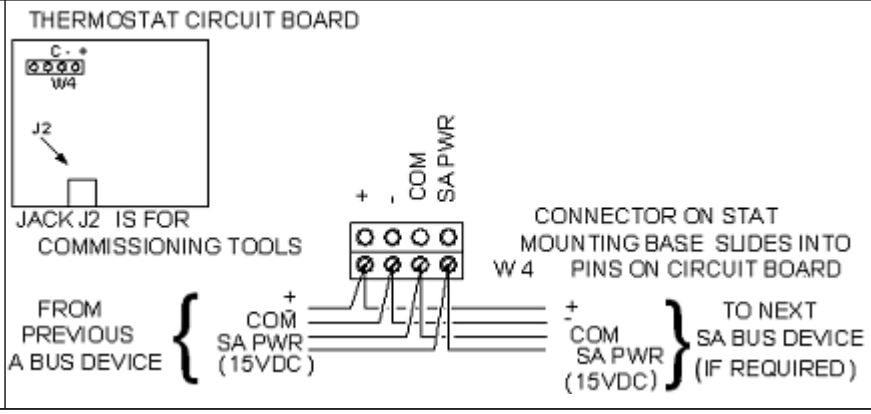

Setup and adjustments

Important: Electrostatic discharge can damage controller components. Use proper electrostatic discharge precautions during installation, setup, and servicing to avoid damaging the controller.

Configuring N2 communications (CGM models only)

N2-capable controllers support the full range of possible N2 device addresses provided by the N2 protocol standard (1-253).

To configure a CGM controller to communicate using the N2 protocol, complete the following steps:

1. Disconnect the 24 VAC supply from the controller.
2. Set the address switches to the desired N2 address. For details about setting a device address, see Setting the device address on CGM models.
3. Reconnect the 24 VAC supply to the controller.
4. Using an SA Bus connection, download the firmware and controller application file configured for N2 to the controller.

Switching the Communications Protocol from N2 to MS/TP

For N2 sites that are converting to BACnet MS/TP, you can switch the communications protocol of N2-configured controllers back to BACnet MS/TP.

To switch the CGM controller operating in N2 mode back into BACnet MS/TP mode, complete the following steps:

1. Disconnect the 24 VAC supply from the controller.
2. Set the address switches to the desired BACnet MS/TP address. For details about setting a device address, see Setting the device address on CGM models.
3. Reconnect the 24 VAC supply to the controller.
4. Using an SA Bus connection, download a controller application file configured for BACnet MS/TP to the controller.

Configuring wireless communications (CGM models only)

To configure a CGM controller for use with the ZFR Pro Series Wireless Field Bus system, complete the following steps:

1. Disconnect the 24 VAC supply from the controller.
2. Wire the input/output terminals and SA Bus.
3. **Important:** Before the CGM controller is powered on, connect the FX-ZFR Pro Wireless Field Bus Router to the FC Bus port (RJ-12 modular jack) on the front of the controller.
4. Ensure that the controller's rotary switches are set to the correct device address. For details about setting a device address, see Setting the device address on CGM models.
5. Reconnect the 24 VAC supply to the controller.

For more information about the ZFR Pro Wireless Field Bus system, refer to the *WRG1830/ZFR183x Pro Series Wireless Field Bus for Facility Explorer Systems Technical Bulletin (LIT-12013796)*.

Setting the device address on CGM models

The CGM controllers are devices on MS/TP (FC or SA) Buses. Before you operate controllers on a bus, you **must** set a valid and unique device address for each controller on the bus. The following table describes the valid rotary switch device addresses for communications bus applications:

FC Bus communication mode	Valid device address range
Wired MS/TP communication	4-127 **Note:** Addresses 0-3 are reserved and not for use on equipment controllers.
ZFR Pro Wireless communication	4-127 **Note:** Addresses 0-3 are reserved and not for use on equipment controllers.
N2 communication	1-253 **Note:** Addresses 0, 254, and 255 are reserved and not for use on equipment controllers.

The device address is a decimal address set using three rotary switches located at the top of the controller. The numbers are ordered from left to right, 100s, 10s, and 1s. As shown in the following figure, the switches are set to 1 2 3, designating this controller's device address as 123.

Figure 11: Rotary switch block

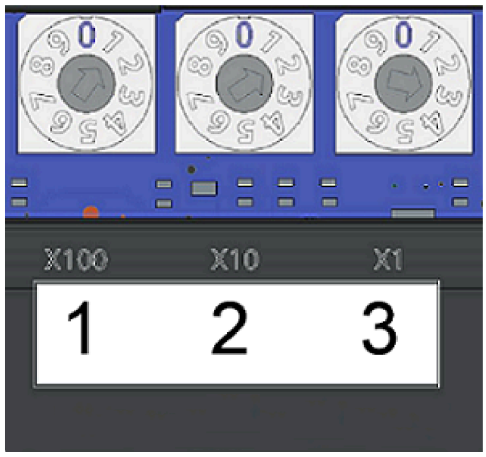

The device address must match the device address defined in the Controller Configuration Tool (CCT) under **Define Hardware > Network Settings**.

To set the device addresses on controllers, complete the following steps:

1. Set a unique and sequential device address for each of the devices connected on the FC or SA, starting with device address 4.
2. To ensure the best bus performance, set sequential device addresses with no gaps in the device address range (4, 5, 6, 7, 8, 9, and so on). The devices do not need to be physically connected on the bus in their numerical device address order.
3. Write each controller's device address on the white label below the Device Address Rotary Switch Block on the controller's cover.

For more information about controller device addresses and how to set them on MS/TP buses, refer to the *FX MS/TP Communications Bus Technical Bulletin (LIT-12011670)*.

Setting the controller number for CGE models

The rotary switches on the CGE models are used to set the controller number. The controller number can be utilized to physically identify the controller and relate it to the building drawings. The factory default BACnet device ID is calculated from the value of the controller number added to 2000000. Each equipment controller on a BACnet/SC or BACnet/IP network must have a unique BACnet device ID on the system where it resides in order for proper identification and communication. To ensure a unique value, the BACnet device ID should be configured in CCT instead of relying on this default calculation. This step will be necessary on sites with more than 1000 devices as controller numbers will be duplicated.

The controller number is set using three rotary switches and may be numbered from 000 to 999. The numbers are ordered from left to right: 100s, 10s, and 1s.

In Figure 11, the switches are set to 1 2 3, designating this controller as controller number 123. The controller number can be written in the white squares provided so the controller number can be more easily seen from a distance.

Removing a terminal block

To remove a terminal block from the circuit board, complete the following steps:

ⓘ **Note:** You need a flat blade screwdriver to remove the terminal block.

1. To prevent any possibility of damage from an accidental short, **remove power from the controller**.
2. Underneath the terminal block, in the small gap between the bottom of the terminal block and the circuit board, insert the flat blade of the screwdriver.
3. To detach the left-hand side of the terminal block, position the flat blade underneath the terminal block to the left, and push down the screwdriver handle. When you do this, you are using the screwdriver as a lever to pry up the terminal block.
4. To detach the right-hand side of the terminal block, position the flat blade underneath the terminal block to the right, and push down the screwdriver handle.
5. If necessary, repeat steps 3 and 4 until the terminal block is removed.

Removing the controller cover

Important: Electrostatic discharge can damage controller components. Use proper electrostatic discharge precautions during installation, setup, and servicing to avoid damaging the controller.

Important: Disconnect all power sources to the controller before removing the cover and changing the position of any jumper on the controller. Failure to disconnect power before changing a jumper can result in damage to the controller and void any warranties.

The controller cover is held in place by four plastic latches that extend from the base and snap into slots on the inside of the housing cover.

To remove the controller cover, complete the following steps:

1. Place your fingertips under the two cover lift tabs (Device diagram) on the sides of the housing cover and gently pry the top of the cover away from the base to release the cover from the two upper latches.
2. Pivot the top of the cover further to release it from the lower two latches.
3. Replace the cover by placing it squarely over the base, and then gently and evenly push the cover on to the latches until they snap into the latched position.

Figure 12: Controller with cover removed showing jumper positions (CGM09090 model shown)

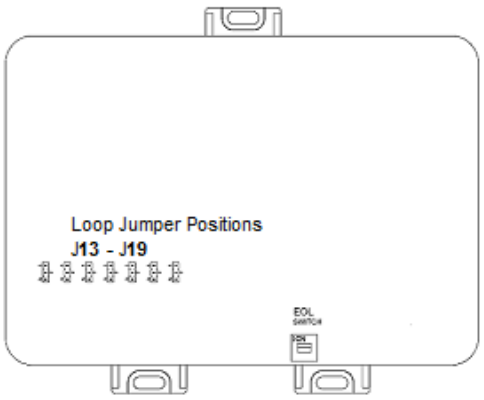

Setting the End-of-Line (EOL) switch (CGM models only)

Each CGM controller has an EOL switch, which, when set to ON (up), sets the controller as a terminating device on the bus. See Figure 12 for the EOL switch location. The default EOL switch position is OFF (down).

Figure 13: End-of-Line switch positions



To set the EOL switch on a controller, complete the following steps:

1. Determine the physical location of the controller on the FC Bus.
2. Determine if the controller must be set as a terminating device on the bus.

   Note: For detailed information about EOL termination rules and EOL switch settings on FC Buses, refer to the *FX MS/TP Communications Bus Technical Bulletin (LIT-12011670)*.
3. If the controller is a terminating device on the FC Bus, set the EOL switch to ON. If the controller is not a terminating device on the bus, set the EOL switch to Off.

   When a controller is connected to power with its EOL switch set to ON, the amber EOL LED on the controller cover is illuminated.

Setting the UI current loop jumpers

CAUTION

Risk of Electric Shock:

Disconnect supply power to the devices before attempting to adjust the UI current loop jumpers. Failure to disconnect the supply power may result in electric shock.

ATTENTION

Mise En Garde: Risque de décharge électrique:

Débrancher l'alimentation de l'controller avant tout réglage du UI current loop jumpers. Le non-respect de cette précaution risque de provoquer une décharge électrique.

The UI current loop jumpers are on the circuit board under the controller cover near the UI terminals (Figure 12). When a UI is defined (in the system software) as a 4-20 mA Analog Input, set the UI's current loop jumper to the Enabled position (Figure 14).

Figure 14: UI Current Loop Jumper Positions

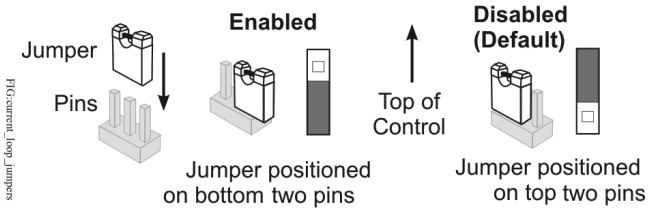

Setting the current loop jumper to the Enabled position, connects an internal 100 ohm resistor across the UI terminals, which maintains the 4-20 mA current loop circuit even when power to the controller is interrupted or off.

Important: Current Loop jumpers must be in the Disabled (default) position for all UIs that are not set up to operate as 4-20 mA analog inputs.

Important: A current loop jumper must be in the Enabled position to maintain a closed 4-20 mA current loop.

The following tables identify the current loop switches associated with each UI on the CG series controllers.

Table 8: CGM09090 and CGE09090 UI Inputs and jumper labels

Universal Input label	Jumper label on circuit board
UI-1	J13
UI-2	J14
UI-3	J15
UI-4	J16
UI-5	J17
UI-6	J18
UI-7	J19

Table 9: CGM04060 and CGE04060 UI Inputs and jumper labels

Universal Input label	Jumper label on circuit board
UI-1	J10
UI-2	J11
UI-3	J12

Setting up a local display

CGM09090-0H and CGE09090-0H models have an integral color display and navigation keypad that can be set up to enable local monitoring of the equipment controller's I/O

points and parameters/setpoints, including any I/O points of the expansion modules connected on the SA Bus.

ⓘ **Note:** If the display is not configured in the application, then the display shows all BACnet exposed application points.

CGM/CGE models that do not have an integral display can be connected to an F4-DLK0350 local controller display or an FX-DIS1710 local controller display. If the display is configured with a local password, the equipment controller and display must be running compatible firmware versions. If the display is not configured with a local password, it is compatible with equipment controllers at any firmware revision. See the following table for further details:

ⓘ **Note:** Do not downgrade CGM or CGE models with integral displays to firmware version 9.0 or earlier. Use only firmware version 10.0 or later with CGM or CGE models with integral displays.

Table 10: Equipment Controller and display compatibility for displays configured with a local password

Display model and firmware version	Controller running 10.x firmware or greater	Controller running 9.x firmware or earlier
DLK0350 running 10.x firmware or greater	Compatible	Not compatible
DLK0350 running 9.x firmware	Not compatible	Compatible
DIS1710 running 6.2 firmware	Not compatible	Compatible

The DLK0350 and DIS1710 models should not be connected to CGM/CGE -0H models that include an integral display.

For detailed information about setting up and operating a remotely connected DLK0350 display, refer to the *Local Controller Display User Guide (LIT-12013762)*. For detailed information about setting up and operating a remotely connected FX-DIS1710 display, refer to the *FX-DIS Local Controller Display Technical Bulletin (LIT-12011666)*.

Input/Output wiring validation

The CGM/CGE controllers ship with a default state that can assist in validating the wiring of the input and output terminals prior to download of an application file. When the controller is powered on in this state, the Fault LED will flash in a pattern of two quick blinks and then a long pause (see LED status and states).

To make use of this feature, ensure the rotary switches are set to the desired address or controller number and wire the input and output terminals. Apply power to the controller and connect to the device with either a MAP Gateway or a F4-DLK0350 local controller display to view the points in the controller. The controller will report an Operational status even though there is no true application loaded. CCT will not be able to commission or upload the device as a result until a true application is downloaded. The application name displayed will be the address of the controller followed by the model of the controller and “Default State”.

For example, a CGM09090 controller whose rotary switches are set to 8 would have the default state application name of “8-CGM09090 Default State”.

The default state creates I/O points for all connections on the input and output terminals. It assumes all Universal Inputs (UIs) are Nickel temperature sensors. All Configurable Outputs (COs) are treated as Binary Outputs (BOs) with an initial value of 0. The default state also takes input from a Network Sensor at address 199. If there is no connected Network Sensor, the startup of this default state will be delayed by 30 seconds as the controller attempts to establish connection with the sensor.

Commissioning the controller

You commission equipment controllers with the CCT software using the Mobile Access Portal (MAP) Gateway, the Connected Workflow Application Wireless MS/TP Converter (CWCVT), or in BACnet router mode when connected to an FX supervisory controller. For detailed information about commissioning the controller, refer to *Mobile Access Portal Gateway User Guide (LIT-12011999), CWCVT Wireless MS/TP Converter User Guide (LIT-12014120)*, or *Controller Tool Help (LIT-12011147)*.

Commission controllers using the following connection types.

Connection Type	CGM	CGE
MAP 4.2+/BACnet Router	X	X
CWCVT	X	
Direct Ethernet		X
IP to MS/TP Routing	X	

Troubleshooting equipment controllers

Observe the Status LEDs on the front of the equipment controller. Table 11 provides LED status indicator information for troubleshooting the controller.

LED status and states

Table 11: Status LEDs and description of LED states

LED label	LED color	Normal state	Descriptions of LED states
POWER	Green	On Steady	Off Steady = No power On Steady = Power is supplied by primary voltage
FAULT	Red	Off Steady	2 blinks followed by long pause = Controller powered on in default state. For more information about this default state, see Input/Output wiring validation. Blink - 2 Hz = Startup in progress, not ready for normal operation Rapid blink = SA Bus communications issue Off Steady = No faults On Steady = Device fault or no application loaded
FC BUS (CGM models)	Green	Blink - 2 Hz	Blink - 2 Hz = Data transmission (normal communication) Off Steady = No data transmission (auto baud in progress) On Steady = communication lost, waiting to join communication bus
SA BUS	Green	Blink - 2 Hz	Blink - 2 Hz = Data transmission (normal communication) Off Steady = No data transmission (N/A - auto baud not supported) On Steady = Communication lost; waiting to join communication bus
FC EOL (CGM models)	Amber	Off (except on terminating devices)	On Steady = EOL is active Off Steady = EOL is not active
ETH-1 (CGE models)	Green	Off	Off Steady = ETH-1 is not connected Blinking = ETH-1 connected and communicating
ETH-2 (CGE models)	Green	Off	Off Steady = ETH-2 is not connected Blinking = ETH-2 connected and communicating
FAULT and SA BUS	Red Green		Both blink six times in sequence = no valid firmware on the device (Applicable to CGE models only)

Accessories

The following table provides the product code number for the CG series controller accessories.

Table 12: CG series controller accessories (order separately)

Product Code Number	Description
XPM Series Expansion Modules	Refer to the *Facility Explorer CG, CV Equipment Controllers and XPM Expansion Modules Product Bulletin (LIT-12013225)* for a complete list of available XPM series expansion modules.
PCX Series Expansion Modules	Refer to the *PCX Input/Output Expansion Modules Catalog Page (LIT-1900671)* for a complete list of available PCX series expansion modules
TL-CCT-0	License enabling Controller Configuration Tool (CCT) software for one user
FX-FCP-0	License enabling Facility Explorer Equipment Controller Firmware Package Files required for CCT
TL-CWCVT-0	Communications converter that provides a temporary wireless connection between a host device and equipment controllers that support the BACnet MS/TP protocol.
F4-DLK0350-0	Local Controller Display, 3.5 in. (89 mm) color display with navigation keypad
NS Series Network Sensors	Refer to the *NS Series Network Sensors Product Bulletin (LIT-12011574)* for specific sensor model descriptions.
AS-CBLTSTAT-0	Cable adapter for connection to 8-pin TE-6700 Series sensors
NS-WALLPLATE-0	Network Sensor Wall Plate
WRZ Series Wireless Room Sensors	Refer to the *WRZ Series Wireless Room Sensors Product Bulletin (LIT-12011653)* for specific sensor model descriptions.

Table 12: CG series controller accessories (order separately)

Product Code Number	Description
WRZ-7860-0	Receiver for One-to-One Wireless Room Sensing Systems - functions with WRZ Series Sensors room sensors. Refer to the *WRZ-7860 Receiver for One-to-One Wireless Room Sensing Product Bulletin (LIT-12011640)* for a list of available products.
WRZ-SST-120	Wireless System Survey Tool. For use with the lower power 10mW WRZ and WRZ-7860 systems. Refer to the *WRZ-SST-120 Wireless Sensing System Tool Installation Instructions (LIT-24-10563-55)* for usage instructions.
ZFR-HPSST-0	Wireless System Survey Tool. For use with the higher power WRG1830/ZFR183x System and lower power WRZ Sensors (10 mW). Refer to the *ZFR-HPSST-0 Wireless Sensing System Tool Installation Guide (Part No. 24-11461-00012)* for usage instructions.
WRG1830/ZFR183x Pro Wireless Field Bus System	For more information on products needed for wireless field bus installations and for a list of available products, refer to the *WRG1830/ZFR183x Pro Series Wireless Field Bus System Catalog Page (LIT-1901153)*.
ZFR-USBHA-0	ZFR USB Dongle provides a wireless connection through CCT to allow wireless commissioning of the wirelessly enabled CGM and CVM controllers. It also allows use of the ZFR Checkout Tool (ZCT) in CCT. ⓘ **Note:** The ZFR-USBHA-0 is not compatible with the WRG1830/ZFR183x Pro Series. ⓘ **Note:** The ZFR-USBHA-0 replaces the IA OEM DAUBI_2400 ZFR USB dongle. For additional information about the ZFR-USBHA-0 ZFR dongle, refer to the *ZCT Checkout Tool Help (LIT-12012292)* or the *WNC1800_ZFR182x Pro Series Wireless Field Bus System Technical Bulletin (LIT-12012356)*.
Y64T15-0	Transformer, 120/208/240 VAC Primary to 24 VAC Secondary, 92 VA, Foot Mount, 72.2 cm (30 in.), Primary Leads and 76.2 cm (30 in.) Secondary Leads, Class 2
Y65A13-0	Transformer, 120 VAC Primary to 24 VAC Secondary, 40 VA, Foot Mount (Y65AS), 20.32 cm (8 in.), Primary Leads and 76.2 cm (30 in.) Secondary Leads, Class 2
Y65T31-0	Transformer, 120/208/240 VAC Primary to 24 VAC Secondary, 40 VA, Foot Mount (Y65AR +), 20.32 cm (8 in.), Primary Leads and Secondary Screw Terminals, Class 2
Y65T42-0	Transformer, 120/208/240 VAC Primary to 24 VAC Secondary, 40 VA, Hub Mount (Y65SP +), 20.32 cm (8 in.), Primary Leads and Secondary Screw Terminals, Class 2
ACC-TBKINOUT-0	Input and Output terminal block replacement kit for SNC, CGM, CGE, CCM, CVM, CVE, and XPM products. Kit includes 5 of each 2, 3, and 4 position Input and Output terminal blocks.
ACC-TBKPWFCSA-0	Power, FC Bus, and SA Bus terminal block replacement kit for SNC, CGM, CGE, CCM, CVM, CVE, and XPM products. Kit includes 5 of each terminal block type.
MS-FIT100-0	The Field Inspection Tool or (FIT) is a portable handheld device with a user interface that is used to test and troubleshoot the BACnet protocol MS/TP RS-485 communications bus that connects supervisory controllers and equipment controllers to field point interfaces. The FIT can be used to check out the wiring of the MS/TP RS-485 bus as well as verify proper communications of supervisory controllers and equipment controllers connected to the bus. The FIT can be used on both the FC Bus and SA Bus.
TL-BRTRP-0	Portable BACnet/IP to MS/TP Router

CG series technical specifications

Table 13: Technical specifications for CG series controllers

Specification	Description
Power requirement	24 VAC (nominal, 20 VAC minimum/30 VAC maximum), 50/60 Hz, power supply Class 2 (North America), Safety Extra-Low Voltage (SELV) (Europe)
Power consumption	**F4-CGM models:** 14 VA maximum **F4-CGE models:** 15 VA maximum
Power source	+15 VDC power source terminals provide 100 mA total current. **F4-CGM09090, F4-CGE09090:** Two +15VDC terminals located in Universal IN terminals for active (3-wire) input devices ⓘ **Note:** The controllers listed contain only one +15VDC Power Supply for each controller. **F4-CGM04060, F4-CGE04060:** One +15VDC power source terminal located in Universal IN terminals for active (3-wire) input devices
Ambient conditions	**Operating:** 0°C to 50°C (32°F to 122°F); 10 to 90% RH noncondensing ⓘ **Note:** For UL 864 10th Edition/cUL applications, operating: 0°C to 49°C (32°F to 120°F) **Storage:** -40°C to 80°C (-40°F to 176°F); 5 to 95% RH noncondensing
Communications protocol	**F4-CGM models:** BACnet MS/TP, N2, ZFR Wireless also supported (at FC Bus and for Sensors) with additional hardware. **F4-CGE models:** BACnet/IP or BACnet/SC
Device addressing for BACnet MS/TP	Decimal address set using three rotary switches: valid controller device addresses 4-127
Device addressing for N2	Decimal address set using three rotary switches: valid controller device addresses 1-253
Controller number for Ethernet controllers	Three rotary switches to assign a unique number for each controller to physically identify the controller and relate it to the building drawings; valid controller numbers 0-999
Communications bus	**F4-CGM models** BACnet MS/TP (default); N2 3-wire FC Bus between the supervisory controller and equipment controllers **F4-CGE models** BACnet/IP (default); BACnet/SC Two Ethernet ports; 10/100 Mbps; 8-pin RJ-45 connector **All F4-CG models** 4-wire SA Bus between equipment controller, network sensors and other sensor/actuator devices, includes a lead to source 15 VDC supply power, from equipment controller, to bus devices.
Processor	RX64M Renesas® 32-Bit microcontroller
Memory	16 MB flash memory and 8 MB SDRAM
Real-time clock backup power supply	Super capacitor maintains power to the onboard real-time clock for a minimum of 72 hours when supply power to the controller is disconnected.
Input and Output capabilities	**F4-CGM09090, F4-CGE09090** 7 - Universal Inputs: Defined as 0–10 VDC, 4–20 mA, 0–600k ohms, or Binary Dry Contact 2 - Binary Inputs: Defined as Dry Contact Maintained or Pulse Counter/Accumulator Mode 4 - Configurable Outputs: Defined as 0-10 VDC or 24 VAC Triac BO 2 - Analog Outputs: Defined as 0–10 VDC or 4–20 mA 3 - Binary Outputs: Defined as 24 VAC Triac (external power source only) **F4-CGM04060, F4-CGE04060** 3 - Universal Inputs: Defined as 0–10 VDC, 4–20 mA, 0–600k ohms, or Binary Dry Contact 1 - Binary Inputs: Defined as Dry Contact Maintained or Pulse Counter/Accumulator Mode 4 - Configurable Outputs: Defined as 0-10 VDC or 24 VAC Triac BO 2 - Binary Outputs: Defined as 24 VAC Triac (external power source only)

Table 13: Technical specifications for CG series controllers

Specification	Description
Universal Input (UI) resolution/ Analog Output (AO) accuracy	**Input:** 24-bit Analog to Digital converter **Output:** +/- 200 mV accuracy in 0–10 VDC applications
Terminations	**Input/Output:** Pluggable Screw Terminal Blocks **FC Bus, SA Bus, and Supply Power:** 4-Wire and 2-Wire Pluggable Screw Terminal Blocks **FC and SA Bus Modular Ports:** RJ-12 6-Pin Modular Jacks ⓘ **Note:** The FC Bus Terminal and FC Bus Port are only available on the CGM models
Mounting	Horizontal on single 35 mm DIN rail mount (recommended), or screw mount on flat surface with three integral mounting clips on controller
Housing	**Enclosure material:** ABS and polycarbonate UL94 5VB; Self-extinguishing Protection Class: IP20 (IEC529)
Dimensions (Height x Width x Depth)	**F4-CGM09090, F4-CGE09090:** 150 mm x 190 mm x 44.5 mm (5-7/8 in. x 7-1/2 in. x 1-3/4 in.) including terminals and mounting clips. **F4-CGM04060, F4-CGE04060:** 150 mm x 152 mm x 44.5 mm (5-7/8 in. x 6 in. x 1-3/4 in.) including terminals and mounting clips ⓘ **Note:** Mounting space requires an additional 50 mm (2 in.) space on top, bottom, and front face of controller for easy cover removal, ventilation, and wire terminations.
Weight	**F4-CGM04060,F4-CGE04060:** 0.29 kg (0.64 lb) **F4-CGM09090,F4-CGE09090:** 0.4 kg (0.89 lb) **F4-CGM09090-0H,F4-CGE09090-0H:** 0.47 kg (1.04 lb)
Compliance	**United States:** UL Listed, File E107041, CCN PAZX, UL 916, Energy Management Equipment FCC Compliant to CFR47, Part 15, Subpart B, Class A
	Canada: UL Listed, File E107041, CCN PAZX7 CAN/CSA C22.2 No. 205, Signal Equipment Industry Canada Compliant, ICES-003
CE	**Europe:** Johnson Controls declares that this product is in compliance with the essential requirements and other relevant provisions of the EMC Directive and RoHS Directive.
	**Australia and New Zealand:** RCM Mark, Australia/NZ Emissions Compliant
	BACnet International: BACnet Testing Laboratories™ (BTL) Protocol Revision 19 Certified BACnet Advanced Application Controller (B-AAC), based on ANSI/ASHRAE 135-2020
UK CA	**United Kingdom:** Johnson Controls declares that this product is in compliance with Electromagnetic Compatibility Regulations, The Electrical Equipment (Safety) Regulations, and Restriction of the Use of Certain Hazardous Substances in Electrical and Electronic Equipment Regulations.

1 The VA rating does **not** include any power supplied to the peripheral devices connected to Configurable Outputs (COs) or Binary Outputs (BOs), which can consume up to 12 VA for each CO or BO; for a possible total consumption of an additional 84 VA (maximum).

The performance specifications are nominal and conform to acceptable industry standard. For application at conditions beyond these specifications, consult the local Johnson Controls office. Johnson Controls shall not be liable for damages resulting from misapplication or misuse of its products.

Repair information

If the controller fails to operate within its specifications, replace the controller. For a replacement controller, contact your Johnson Controls representative.

Product warranty

This product is covered by a limited warranty, details of which can be found at www.johnsoncontrols.com/buildingswarranty.

Patents

Patents: https://jcipat.com

Single point of contact

APAC	EU	UK	NA/SA
JOHNSON CONTROLS C/O CONTROLS PRODUCT MANAGEMENT NO. 32 CHANGJIANG RD NEW DISTRICT WUXI JIANGSU PROVINCE 214028 CHINA	JOHNSON CONTROLS VOLTAWEG 20 6101 XK ECHT THE NETHERLANDS	JOHNSON CONTROLS TYCO PARK GRIMSHAW LANE MANCHESTER M40 2WL UNITED KINGDOM	JOHNSON CONTROLS 5757 N GREEN BAY AVE. GLENDALE, WI 53209 USA

Contact information

Contact your local Johnson Controls representative: www.johnsoncontrols.com/locations
Contact Johnson Controls: www.johnsoncontrols.com/contact-us

© 2026 Johnson Controls. All rights reserved. All specifications and other information shown were current as of document revision and are subject to change without notice.