F4-DLK0350 Local Controller Display Installation Guide

LIT-12013989

2024-12-11

DLK0350 overview

The DLK0350 is a local controller display that provides enhanced local monitoring of controlled field equipment. The DLK0350 local display features a 3.5 inch, 320x240 resolution color display and navigation keypad. The display is compatible with the SNC series supervisory controllers, F4-CG series, F4-CV series, PCA series, PCG series, PCV series, and the ATC1510 equipment controllers that do not have an integral display. The display connects through the SA Bus of the controller and provides a local user interface for the application running in the controller. Refer to the *Local Controller Display User Guide (LIT-12013762)* for information on how to use the display.

For DLK0350 ordering information and accessories, refer to the *F4-DLK0350 Product Bulletin (LIT-12014010)*.

North American emissions compliance

United States

This equipment has been tested and found to comply with the limits for a Class A digital device pursuant to Part 15 of the FCC Rules. These limits are designed to provide reasonable protection against harmful interference when this equipment is operated in a commercial environment. This equipment generates, uses, and can radiate radio frequency energy and, if not installed and used in accordance with the instruction manual, may cause harmful interference to radio communications. Operation of this equipment in a residential area may cause harmful interference, in which case the users will be required to correct the interference at their own expense.

Warning (Part 15.21)

Changes or modifications not expressly approved by the party responsible for compliance could void the user's authority to operate the equipment.

Canada

This Class (A) digital apparatus meets all the requirements of the Canadian Interference-Causing Equipment Regulations.

Cet appareil numérique de la Classe (A) respecte toutes les exigences du Règlement sur le matériel brouilleur du Canada.

Industry Canada Statement(s)

This device complies with Industry Canada licence-exempt RSS standard(s). Operation is subject to the following two conditions:

1. This device may not cause interference, and
2. This device must accept any interference, including interference that may cause undesired operation of the device.

Le présent appareil est conforme aux CNR d'Industrie Canada applicables aux appareils radio exempts de licence. L'exploitation est autorisée aux deux conditions suivantes :

1. L'appareil ne doit pas produire de brouillage, et
2. L'utilisateur de l'appareil doit accepter tout brouillage radioélectrique subi, même si le brouillage est susceptible d'en compromettre le fonctionnement.

Installation

Observe these guidelines when you install the DLK0350 display:

- Transport the display in the original container to minimize vibration and shock damage to the unit.
- Verify that all parts were shipped with the display.
- Do not drop the display or subject it to physical shock.

Parts included

- One DLK0350 Local Controller Display
- One RJ-12 communication cable
- Five mounting screws (UNC #4-40)
- Mounting template, included on the back page of the DLK0350 Pack Sheet (Part No. A1638165KE)

Materials and special tools needed

- A small Phillips-head screwdriver
- A drill with a #30 bit
- A small, straight-blade screwdriver
- Drill bit hole saw, step drill bit, or other tool to create access holes

Physical features

Figure 1: DLK0350 front, underside, rear, and interior view

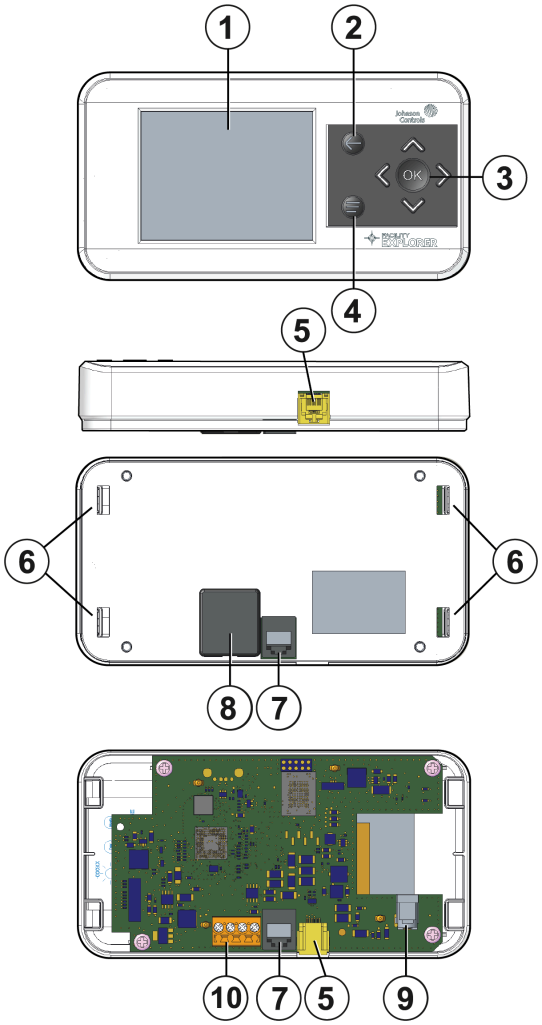

Table 1: DLK0350 physical features

Callout	Description
1	Display screen
2	Back button
3	Directional and selection buttons
4	Menu button
5	SA Bus connector, underside access
6	Tabs for removing the back plate
7	SA Bus connector, rear side access
8	Removable grommet that covers a 4-position connector for SA Bus terminal block
9	15 VDC power jack. Use only for connecting an optional, external power supply.
10	SA terminal block

Mounting

Mounting dimensions

Figure 2: DLK0350 dimensions, mm (in.)

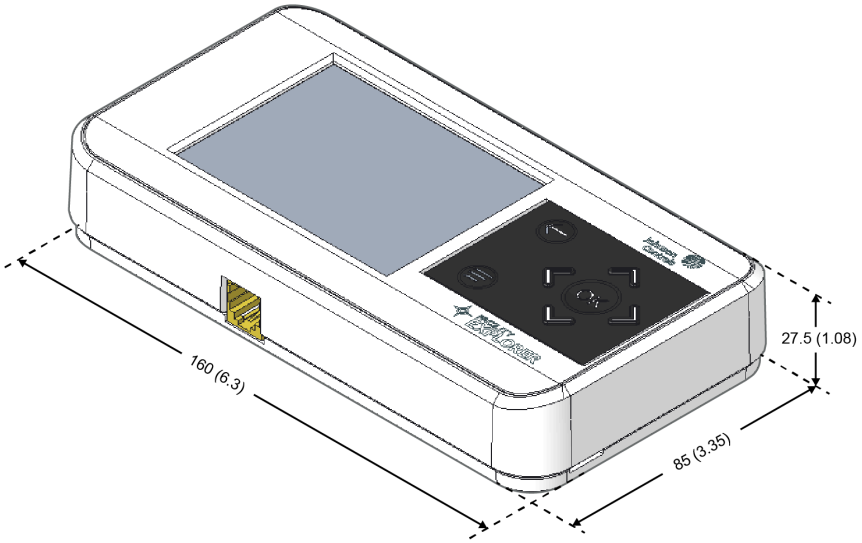

Preparing the panel

The display mounts onto the outside of the front panel door of the enclosure. Refer to the following figure for drilling and cutout locations. To view the DLK0350 mounting template, see or refer to the *DLK0350 Pack Sheet (Part No. A1638165KE)*

Figure 3: DLK0350 panel mounting and cutout dimensions, mm (in.)

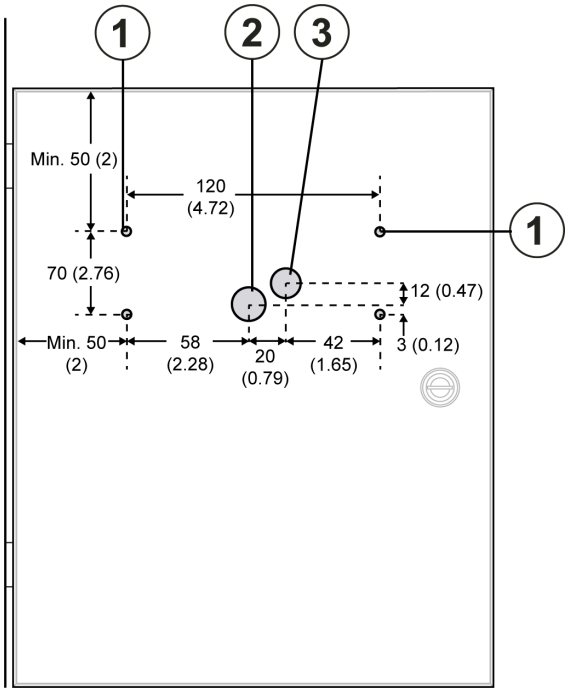

Callout	Description
1	A drilled mounting hole with a diameter of 3.5 mm (0.14 in.) that is located a minimum distance of 50 mm (2 in.) from the edge of the door. ⓘ **Note:** Available drill sizes may vary depending on the region.
2	Access hole for SA Bus, with a diameter of 20 mm (0.79 in.). ⓘ **Note:** Use base plate hole on the rear of the device to help locate drill center-mark.
3	Power jack and SA Bus terminal block access hole, with a diameter of 16 mm (0.63 in.).

Mounting the DLK0350

ⓘ **Note:** Do not use the grommets that are supplied for the drilled holes. Remove the grommets before you mount the device. Use the grommets supplied for when you use the DLK0350 as a portable device.

1. Place the mounting template on the outside of the panel.
2. Drill four mounting holes with a diameter of 3.5 mm (0.14 in.) as shown in Figure 3.
3. Drill an access hole for the SA Bus RJ-12 port with a diameter of 20 mm (0.79 in.). See callout number 3 in Figure 3
4. **Optional:** If you want to use the SA Bus terminal block to connect the display to the SA Bus or if you want to connect to an external 15 VDC power supply, drill an access hole with a diameter of 16 mm (0.63 in.). See callout number 2 in Figure 3

5. Screw the DLK0350 unit/back plate to the front of the panel using the four holes drilled in Step 2.

   Note: Route wires or cable through the access holes before you secure to the orange connector terminals.

Wiring

Note: If a controller has an integral display, do not connect the local display because the SA Bus will have two devices with the same MAC address, which will cause communication conflicts.

Important: Only use one of the following connection types with the DLK0350. Do not connect to the RJ12 connector and connect another device to the SA terminal connection.

Connecting the display using the RJ-12 SA Bus Port

Connect the communication cable between the SA Bus connector on the back of the display and the SA Bus jack on the front of the controller. The coiled cable is 45.7 cm (18 in.) in length and stretches to a maximum length of 122 cm (48 in).

Note: It is best practice to avoid extending the cable beyond a length of 91.4cm (36 in.). Stretching the cable beyond that length can put a lot of strain on the connectors.

Figure 4: SA bus cable connection from the DLK0350 to the sensor port

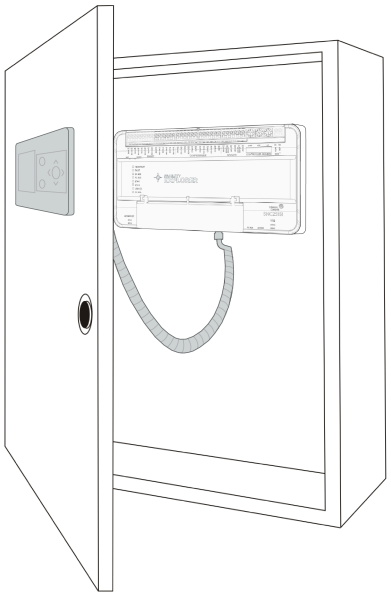

Connecting the display using the SA Bus Terminal Block

The SA bus terminal block is a removable, 4-pin terminal block that fits into a board-mounted pin header. When you connect the DLK0350 display to the SA bus, wire the bus terminal block in a daisy-chain configuration with 4-wire twisted, shielded cable as shown in Figure 5.

Note: Route the cable through the access hole before you secure the wires to the terminal block. Remove the terminal block from the device to wire it.

Figure 5: SA Terminal Bus

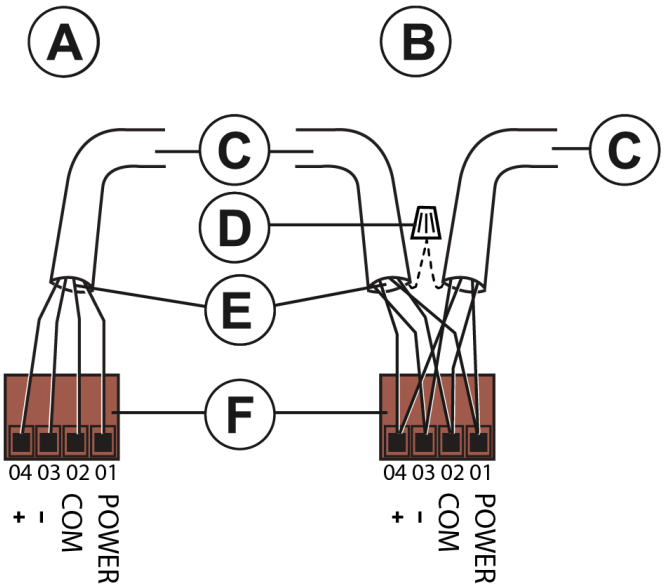

Table 2: Termination devices on SA Bus

Callout	Description
A	Single termination device on the SA Bus
B	Daisy-chained devices on the SA Bus
C	Wired connection to the next device on the SA Bus
D	Cable shield connection
E	Stranded, 4-wire (2 twisted pair) shielded cable. One twisted pair is the **+** and **-** leads and the second twisted pair is the **COM** and **POWER**.
F	SA Bus

Note: The POWER terminal supplies 15 VDC. You can use the POWER terminal to connect, or daisy chain, the 15 VDC power leads on the SA Bus.

Note: Do not use the modular SA Bus port and the terminal block SA Bus simultaneously. Only use one of these connections at a time.

Setup and adjustment

Powering on the display

The DLK0350 display receives power over the Sensor/Actuator (SA) Bus from the equipment controller that it is connected to. When the controller is powered, the display receives power.

Alternatively, you can connect the DLK0350 to an external 15 VDC power source. This power source is an optional power supply that is not supplied with the DLK0350.

Configuring the display

Use the Controller Configuration Tool (CCT) to configure the display. For further details, refer to the *Controller Tool Help (LIT-12011147)*.

Note: If the display object is not configured in the application, then the display shows all BACnet exposed application points.

DLK0350 firmware compatibility

If you want to configure the display with a password, the controller and display must be running compatible firmware versions. If you do not want to configure the display with a password, the display is compatible with controllers at any firmware revision. For more information about what firmware versions are compatible with the DLK when a password is configured, see Table 3. When you load firmware in SA Bus devices, CCT and SCT downloads the latest SA Bus firmware installed in the packages folder. For information about how to delete the latest firmware and downgrade the DLK, see Downgrading DLK firmware.

Table 3: Firmware compatibility for displays configured with a password

Host software	Required DLK software
Equipment Controller, version 9.0 or earlier	DLK, version 9.0
Equipment Controller, version 10.0 or later	DLK, version 10.0 or later
SNC, version 11.0 or earlier	DLK, version 9.0

Table 3: Firmware compatibility for displays configured with a password

Host software	Required DLK software
SNC, version 12.0 or later	DLK, version 10.0 or later

Downgrading DLK firmware

To downgrade a DLK device to version 9.0, complete the following steps:

1. Delete the DLK package ZIP file for any version greater than 9.0 – named F4-DLK0350-10.x or similar – from the following location on your computer: `C:\ProgramData\Johnson Controls\MetasysIII\Field Controller Packages`.
2. Follow the instructions in the *Performing a download using CCT* section of the *Controller Provisioning with Tools User Guide (LIT-12013247)*.
3. From the **Advanced Transfer Option** pane, select the **SA Bus Firmware** check box.
4. Complete the final steps in the *Performing a download using CCT* section of the *Controller Provisioning with Tools User Guide (LIT-12013247)*.

Troubleshooting

For more information about how to use and troubleshoot the display, refer to the *Local Controller Display User Guide (LIT-12013762)*.

Accessories

Table 4: DLK0350 accessories

Product code number	Description
TL-PWRKIT-0A	Optional power supply; for North American power outlets only.
TL-PWRKIT-0D	Optional power supply; includes interchangeable blades for North America, Europe, UK, Australia, and China power outlets.
ACC-TBKPWFCSA-0	Power, FC Bus, and SA Bus terminal block replacement kit for SNC, CG series, CV series, CCM, XPM, and DLK products. Kit includes 5 of each terminal block type. 15 terminal blocks in total.

Technical specifications

Table 5: Technical specifications

Specification	Description
Power requirement	5.2 W
Power consumption	Typically 75 mA, maximum 100 mA. 1.2 W (nominal power without any loading on the SA Bus)
Power supply	11.3 VDC to 16.5 VDC
Ambient conditions	**Operating:** 0°C to 50°C (32°F to 122°F), 10% to 95% RH, Noncondensing **Storage:** -40°C to 80°C (-40°F to 176°F), 5% to 95% RH, Noncondensing
Communications protocol	BACnet MS/TP
Communications bus	BACnet, RJ12 6-pin modular jack, 4-wire pluggable screw terminal block
Processor	Renesas® RX651 32-bit Microcontroller
Memory	64 MB Flash memory and 32 MB SDRAM

Table 5: Technical specifications

Specification	Description
Operating system	Unison RTOS
Network and serial interfaces	Communication to controller over SA Bus
Terminations	• SA Bus Port: RJ-12 6-pin modular jack • SA Bus Terminal: 4-wire pluggable screw terminal block
Mounting	Mount to the outside of the enclosure, 85 mm x 160 mm (3.34 in. x 6.3 in.)
Housing	Plastic housing material: ABS and polycarbonate
Protection	IP20 (IEC60529)
Graphic display resolution	320 x 240 pixels with white LED backlighting (adjustable)
Dimensions (height x width x depth)	85 mm x 160 mm x 27.5 mm (3.34 in. x 6.3 in. x 1.08 in.)
Weight	0.405 lb / 0.184 kg
Compliance	**United States:** UL Listed, File E107041, CCN PAZX, UL 916, Energy Management Equipment FCC Compliant to CFR47, Part 15, Subpart B, Class A
	Canada: UL Listed, File E107041, CCN PAZX7 CAN/CSA C22.2 No. 205, Signal Equipment Industry Canada Compliant, ICES-003
CE	**Europe:** Johnson Controls declares that this product is in compliance with the essential requirements and other relevant provisions of the EMC Directive and RoHS Directive.
	**Australia and New Zealand:** RCM Mark, Australia/NZ Emissions Compliant
UK CA	**United Kingdom:** Johnson Controls declares that this product is in compliance with Electromagnetic Compatibility Regulations, The Electrical Equipment (Safety) Regulations, and Restriction of the Use of Certain Hazardous Substances in Electrical and Electronic Equipment Regulations.

Repair information

If the display fails to operate within its specifications, replace the unit. For a replacement unit, contact the nearest Johnson Controls representative.

Product warranty

This product is covered by a limited warranty, details of which can be found at www.johnsoncontrols.com/buildingswarranty.

Software terms

Use of the software that is in (or constitutes) this product, or access to the cloud, or hosted services applicable to this product, if any, is subject to applicable end-user license, open-source software information, and other terms set forth at www.johnsoncontrols.com/techterms. Your use of this product constitutes an agreement to such terms.

Patents

Patents: https://jcipat.com

Single point of contact

APAC	EU	UK	NA/SA
JOHNSON CONTROLS C/O CONTROLS PRODUCT MANAGEMENT NO. 32 CHANGJIANG RD NEW DISTRICT WUXI JIANGSU PROVINCE 214028 CHINA	JOHNSON CONTROLS VOLTAWEG 20 6101 XK ECHT THE NETHERLANDS	JOHNSON CONTROLS TYCO PARK GRIMSHAW LANE MANCHESTER M40 2WL UNITED KINGDOM	JOHNSON CONTROLS 5757 N GREEN BAY AVE. GLENDALE, WI 53209 USA

Contact information

Contact your local Johnson Controls representative: www.johnsoncontrols.com/locations

Contact Johnson Controls: www.johnsoncontrols.com/contact-us

© 2024 Johnson Controls. All rights reserved. All specifications and other information shown were current as of document revision and are subject to change without notice.