F4-XPM Expansion Modules Installation Guide

F4-XPM04060, F4-XPM09090, F4-XPM18000

Building Technologies and Solutions
www.johnsoncontrols.com
2026-04-21

Part No. 24-10143-02155
Rev D

(Barcode for factory use only)

Johnson Controls

Contents

Application 4
- Communications Protocols 4
- North American Emissions Compliance 4

Installation 4
- Parts included 4
- Materials and special tools needed 5

Device diagram 5

Mounting 7
- Mounting features and dimensions 8
- DIN rail mount applications 9
- Wall mount applications 9

Wiring 10
- Terminal blocks and bus ports 11
  - Method for tightening terminal blocks 11
  - Input and Output terminal blocks 11
  - SA/FC Bus Terminal Block 12
  - SA/FC bus port 13
  - Supply power terminal block 14
- Terminal wiring guidelines, functions, ratings, and requirements 14
  - Input and Output wiring guidelines 14
  - Cable and wire length guidelines 17
  - Maximum cable length versus load current 17
  - Communications bus and supply power wiring guidelines 18
- Termination diagrams 18

Setup and adjustments 24
- Configuring wireless communications 24
- Setting the device address 24
- Removing a terminal block 25
- Removing the expansion module cover 26
- Setting the End-of-Line (EOL) switch 26
- Setting the UI current loop jumpers 27
- Setting up a local display 28
- Commissioning 28

Troubleshooting expansion modules 28
- LED status and states 28

Ordering information and accessories 30

XPM Expansion Modules technical specifications....31
Repair information....32
Product warranty....32
Software terms....32
Patents....33
Single point of contact....33
Contact information....33

Application

The F4-XPM series expansion I/O modules can serve in one of two capacities depending on where they are installed in the system. When installed on the Sensor/Actuator (SA) Bus of an equipment controller, an XPM expands the input and output interfaces that can be used with that equipment controller's application. When installed on the Field Controller (FC) Bus of a FX-SNC, an XPM can be used as I/O point multiplexors to support monitoring and control from a FX-SNC. The point multiplexor can also be useful for sharing points between other equipment controllers on the FC Bus using peer-to-peer connectivity. XPMs operate on an RS-485 BACnet MS/TP Bus and are BACnet Testing Laboratory (BTL) listed and certified to the BACnet Smart Actuator (B-SA) profile.

For XPM series ordering information and accessories, refer to the *Facility Explorer CG, CV Series Equipment Controllers and XPM Expansion Modules Product Bulletin (LIT-12013225)*.

Communications Protocols

The XPM expansion modules can communicate using BACnet MS/TP or wireless using a ZFR Pro Wireless Field Bus Router (on the FC Bus only). By default, the XPM expansion modules communicate using the BACnet MS/TP protocol. The BACnet protocol is a standard for ANSI, ASHRAE, and the International Standards Organization (ISO) for building controls. To configure these expansion modules in a wireless application installation, see Configuring wireless communications.

Note: Using Controller Configuration Tool (CCT) 10.1 and later, FX equipment Controllers can be configured to communicate using either the BACnet MS/TP or the N2 field bus networking protocol. The operation of an XPM on the SA Bus of an equipment controller is not affected by the selection of the BACnet MS/TP or the N2 protocol in the host controller.

North American Emissions Compliance

North American Emissions Compliance

This equipment has been tested and found to comply with the limits for a Class A digital device pursuant to Part 15 of the FCC Rules. These limits are designed to provide reasonable protection against harmful interference when this equipment is operated in a commercial environment. This equipment generates, uses, and can radiate radio frequency energy and, if not installed and used in accordance with the instruction manual, may cause harmful interference to radio communications. Operation of this equipment in a residential area may cause harmful interference, in which case the users will be required to correct the interference at their own expense.

Canada

This Class (A) digital apparatus meets all the requirements of the Canadian Interference-Causing Equipment Regulations.

Cet appareil numérique de la Classe (A) respecte toutes les exigences du Règlement sur le matériel brouilleur du Canada.

Installation

Observe the following guidelines when installing an XPM expansion module:

- To minimize vibration and shock damage transport the expansion module in the original container.
- Verify that all parts shipped with the expansion module.
- Do not drop the expansion module or subject it to physical shock.

Parts included

- One XPM expansion module with removable terminal blocks (Input/Output, Power and SA bus terminal blocks)

- One XPM Series Pack Sheet (A163816VBE)

Materials and special tools needed

- Three fasteners appropriate for the mounting surface (M4 screws or #8 screws)
- One 20 cm (8 in.) or longer piece of 35 mm DIN rail and appropriate hardware for DIN rail mount (only)
- Small straight-blade (1/8 in. or 3.0 mm) or Philips #1 screwdriver for securing wires in the terminal blocks

Device diagram

The following figures display the physical features of XPM expansion modules, and the accompanying table provides a description of the physical features and a reference to further information where required.

Figure 1: XPM09090 and XPM04060 physical features (XPM04060 model shown)

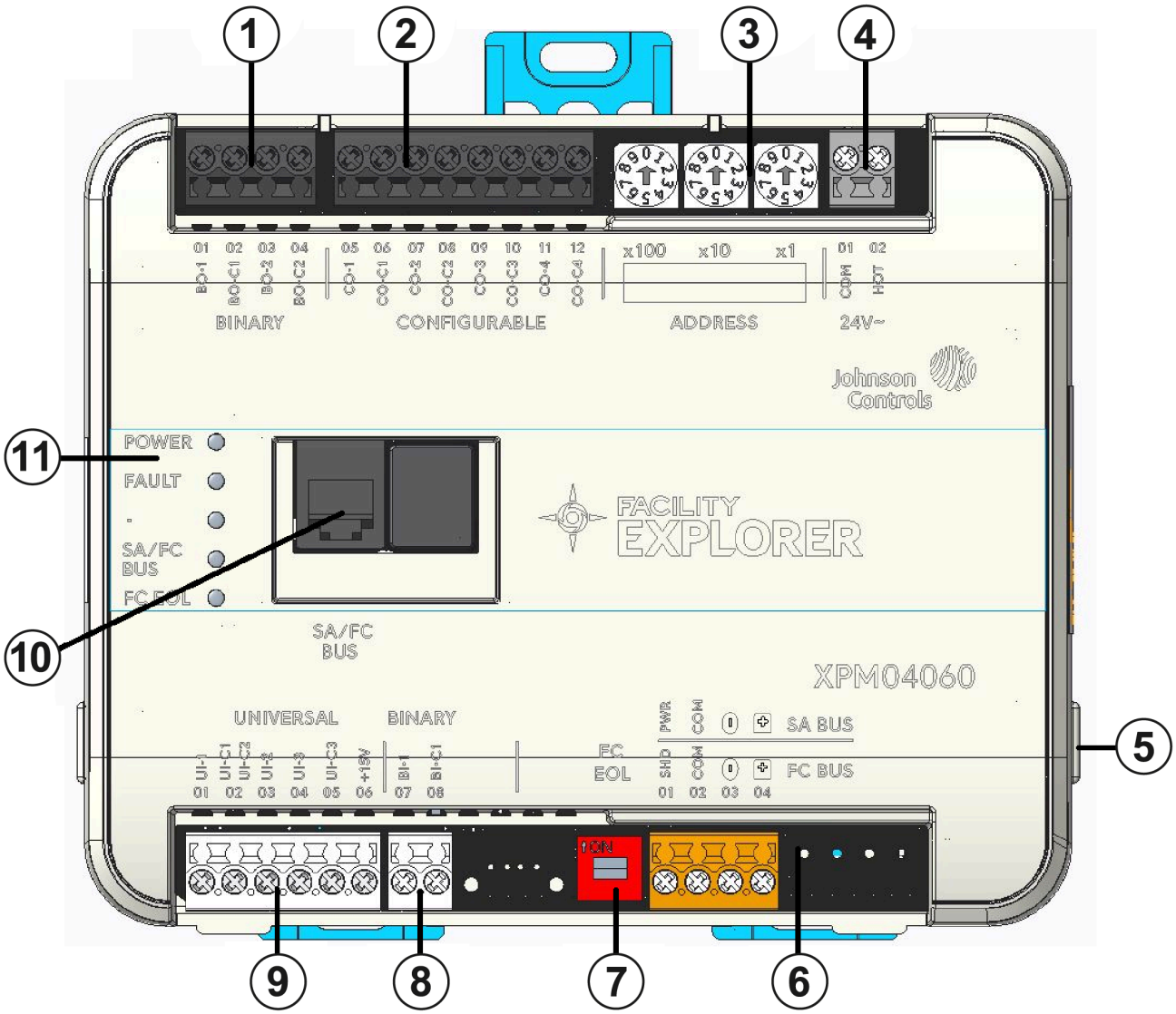

Figure 2: XPM18000 physical features

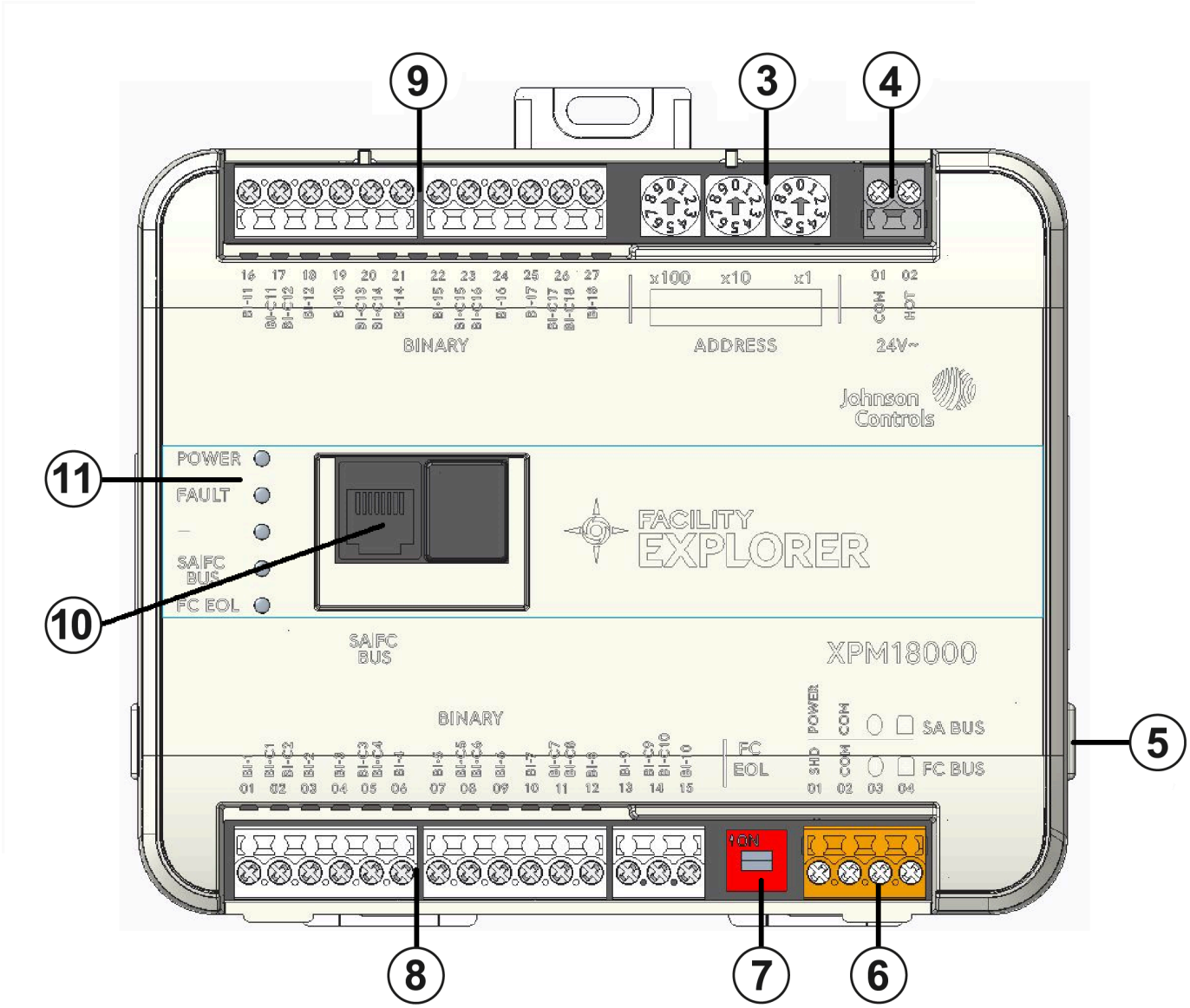

Callout	Description
1	Binary Output (BO) terminal block. Black terminals. Only present on XPM09090 and XPM04060 models. See Table 3.
2	Configurable Output (CO) terminal block. Black terminals. Only present on XPM09090 and XPM04060 models. See Table 3.
3	Device address rotary switch block. Decimal addressing. See Setting the device address.
4	Supply power terminal block. Gray terminals, 24 VAC, Class 2. See Figure 9.
5	Cover lift tab. See Removing the expansion module cover.
6	SA/FC bus terminal block. Orange terminal. See SA/FC Bus Terminal Block.
7	End-of-line (EOL) switch. See Setting the End-of-Line (EOL) switch.
8	Binary Input (BI) terminal block: White terminals. See Table 3.
9	Universal Input (UI) terminal block: Only present on XPM09090 and XPM04060 models. See Table 3.

Callout	Description
10	Sensor Actuator (SA) bus/Field Controller (FC) bus port. RJ-12 6-pin modular jack. See SA/FC bus port.
11	LED status indicators. See LED status and states.

Note: Analog Output (AO) Terminal Block (Black terminal) is only present on XPM09090 model. See Table 3.

Mounting

Observe the following guidelines when mounting an expansion module:

- Ensure the mounting surface can support the expansion module, DIN rail, and any user-supplied enclosure.
- Mount the expansion module horizontally on 35 mm DIN rail whenever possible.
- Mount the expansion module in the proper mounting position.
- Mount the expansion module on a hard, even surface whenever possible in wall-mount applications.
- Use shims or washers to mount the expansion module securely and evenly on the mounting surface.
- Mount the expansion module in an area free of corrosive vapors and observe the Ambient Conditions requirements in Table 13.
- Provide for sufficient space around the expansion module for cable and wire connections for easy cover removal and good ventilation through the expansion module (50 mm [2 in.] minimum on the top, bottom, and front of the expansion module).
- Do not mount the expansion module on surfaces prone to vibration, such as duct work.
- Do not mount the expansion module in areas where electromagnetic emissions from other devices or wiring can interfere with expansion module communication.

On panel or enclosure mount applications, observe the following additional guidelines:

- Mount the expansion module so that the enclosure walls do not obstruct cover removal or ventilation through the expansion module.
- Mount the expansion module so that the power transformer and other devices do not radiate excessive heat to the expansion module.
- Do not install the expansion module in an airtight enclosure.

Figure 3: Expansion Module mounting position

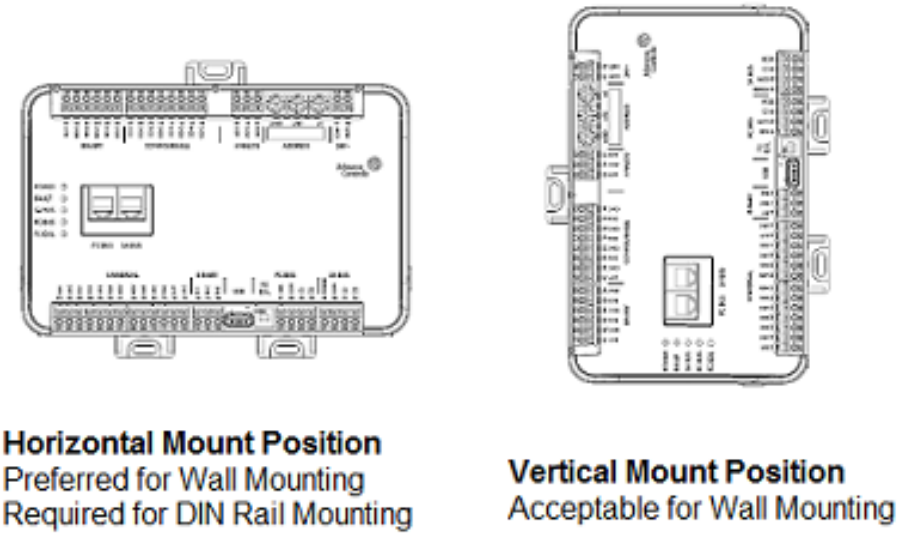

Mounting features and dimensions

Figure 4: Back of XPM04060 and XPM18000 expansion module

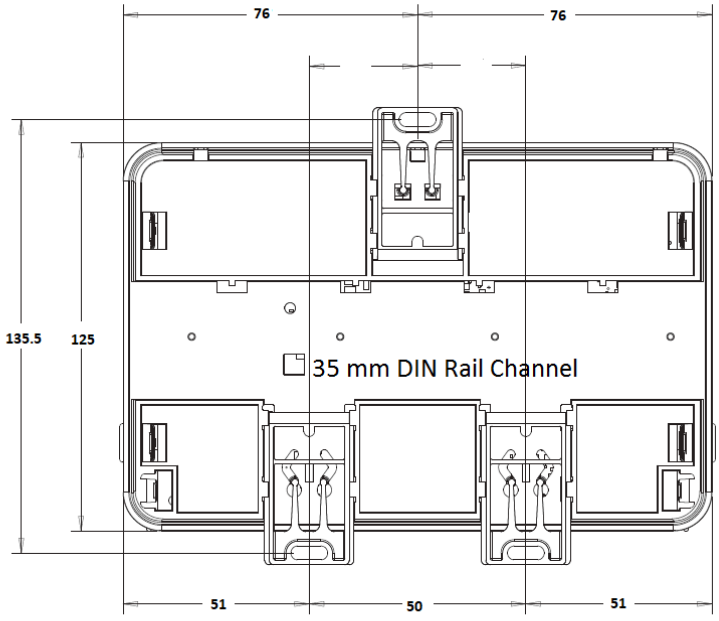

Figure 5: Back of XPM09090 expansion module

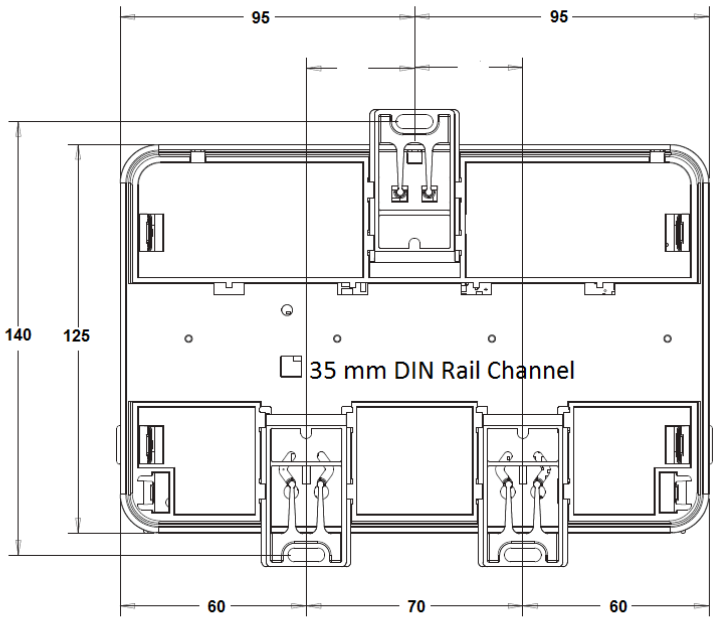

Note:

- Mounting dimensions are listed in millimeters in the above figures.
- The DIN rail channel and the mounting clips are shown in an extended position.

DIN rail mount applications

To mount a XPM expansion module horizontally on a 35 mm DIN rail (recommended method), complete the following steps:

1. Securely mount a 20 cm (8 in.) or longer section of 35 mm DIN rail horizontal and centered in the desired space so that the expansion module mounts in the **horizontal** position.
2. Pull the two bottom mounting clips outward from the expansion module to the extended position (Figure 3).
3. Hang the expansion module on the DIN rail by the hooks at the top of the (DIN rail) channel on the back of the expansion module (Figure 4), and position the expansion module snugly against the DIN rail.
4. Push the bottom mounting clips inward (up) to secure the expansion module on the DIN rail.
5. To remove the expansion module from the DIN rail, pull the bottom mounting clips out to the extended position and carefully lift the expansion module off the DIN rail.

Wall mount applications

To mount a XPM expansion module directly on a wall or other flat vertical surface, complete the following steps:

1. Pull the two bottom mounting clips outward and ensure they are locked in the extended position.
2. Determine the proper mounting position the expansion module will be installed. Mark the mounting hole locations on the wall using the dimensions for the expansion module listed in Mounting features and dimensions. Alternatively, hold the expansion module up to the wall or surface in a proper mount position and mark the hole locations through the mounting clips.

3. Drill holes in the wall or surface at the marked locations, and insert appropriate wall anchors in the holes (if necessary).
4. Hold the expansion module in place, and insert the screws through the mounting clips and into the holes (or anchors). Carefully tighten all of the screws.

   ➤ **Important:** Do not over-tighten the mounting screws. Over-tightening the screws may damage the mounting clips.

Wiring

Observe the following guidelines when wiring an XPM expansion module:

⚠ CAUTION

Risk of Electric Shock:

Disconnect the power supply before making electrical connections to avoid electric shock.

⚠ ATTENTION

Mise En Garde: Risque de décharge électrique:

Débrancher l'alimentation avant de réaliser tout raccordement électrique afin d'éviter tout risque de décharge électrique.

⚠ CAUTION

Risk of Property Damage:

Do not apply power to the system before checking all wiring connections. Short circuited or improperly connected wires may result in permanent damage to the equipment.

⚠ ATTENTION

Mise En Garde: Risque de dégâts matériels:

Ne pas mettre le système sous tension avant d'avoir vérifié tous les raccords de câblage. Des fils formant un court-circuit ou connectés de façon incorrecte risquent d'endommager irrémédiablement l'équipement.

➤ **Important:** Do not exceed the expansion module electrical ratings. Exceeding the electrical ratings can result in permanent damage to the expansion module and void any warranty.

➤ **Important:** Use copper conductors only. Make all wiring in accordance with local, national, and regional regulations.

➤ **Important:** Electrostatic discharge can damage expansion module components. Use proper electrostatic discharge precautions during installation, setup, and servicing to avoid damaging the expansion module.

For detailed information about configuring and wiring an MS/TP Bus, FC bus, and SA bus, refer to the *FX-PC Series Controllers MS/TP Communications Bus Technical Bulletin (LIT-12011670).*.

Terminal blocks and bus ports

See Device diagram for terminal block and bus port locations on the XPM expansion module. Observe the following guidelines when wiring an XPM expansion module.

Method for tightening terminal blocks

- **Important:** Remove power from the controller before beginning this procedure. Failure to de-energize the controller can result in equipment damage.
- **Important:** It is best practice to remove the terminal block from the pin headers on the unit before wiring the terminal blocks. See .

Do not use more force than is necessary when tightening the terminal block screws. To prevent applying excessive force when tightening the screws, apply the following steps:

1. Tighten the terminal screws until the screw is snug on the wire, and then tighten the screw an additional quarter (90°) to half (180°) turn.
2. Only use enough downward force necessary to keep the screwdriver bit engaged with the screw. Too much downward force while tightening the terminal screws can damage the terminal.

   If a terminal block exhibits any symptoms of damage, replace the terminal block. For detailed information about replacing terminal blocks, refer to the *Terminal Block Retrofit Installation Guide (LIT-12014622).* See the following table for replacement terminal block kits:

   Table 1: Terminal block replacement part numbers

Product code number	Description
ACC-TBKPWFCSA-1	Power, FC Bus, and SA Bus terminal block replacement kit for SNE, CG series, CV series, CC series, and XPM products. Kit includes 5 of each terminal block type. 15 terminal blocks in total. Power is grey, SA Bus is orange, FC Bus is blue, and all are unnumbered.
ACC-TBKIO234-1	Input and Output terminal block replacement kit for SNC, CG series, CV series, CC series, and XPM products. Kit includes 10 of each 2, 3, and 4 position Input and Output terminal blocks. 30 terminal blocks in total. All black and unnumbered.
ACC-TBKIO678-1	Input and Output terminal block replacement kit for SNC, CG series, CV series, CC series, and XPM products. Kit includes 5 of each 6, 7, and 8 position Input and Output terminal blocks. 15 terminal blocks in total. All black and unnumbered.

Input and Output terminal blocks

XPM models have removable input and output terminal blocks. On XPM09090 and XPM04060 models, all of the input terminal blocks are located on the bottom of the controller, and the output terminal blocks are located on the top of the expansion module. The XPM18000 has inputs only which are located on both the top and bottom of the expansion module. For more information about I/O terminal functions, requirements, and ratings, see Terminal wiring guidelines, functions, ratings, and requirements.

SA/FC Bus Terminal Block

An XPM can be connected to a Sensor/Actuator (SA) bus or a Field Controller (FC) bus, but not to both buses simultaneously. The SA/FC bus terminal block is a removable, 4-pin terminal block that fits into a board-mounted pin header.

When connecting the XPM to an FC bus, wire the bus terminal blocks on the expansion module, and the other FC Bus devices in a daisy-chain configuration using 3-wire twisted, shielded cable as shown in the following figure. See Communications bus and supply power wiring guidelines for more information about communication bus terminal block functions, ratings and requirements.

Figure 6: FC bus terminal block wiring

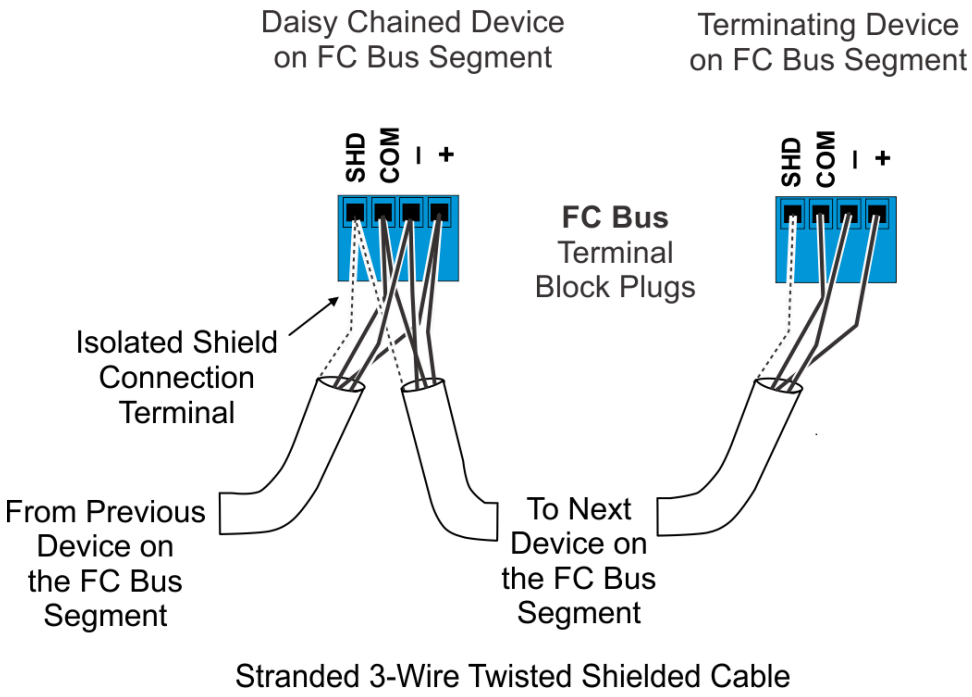

When connecting the XPM to an SA bus, wire the bus terminal blocks on the expansion module and other SA bus devices in a daisy-chain configuration using 4-wire twisted, shielded cable as shown in the following figure. See Communications bus and supply power wiring guidelines for more information about communication bus terminal block functions, ratings and requirements.

Figure 7: SA bus terminal block wiring

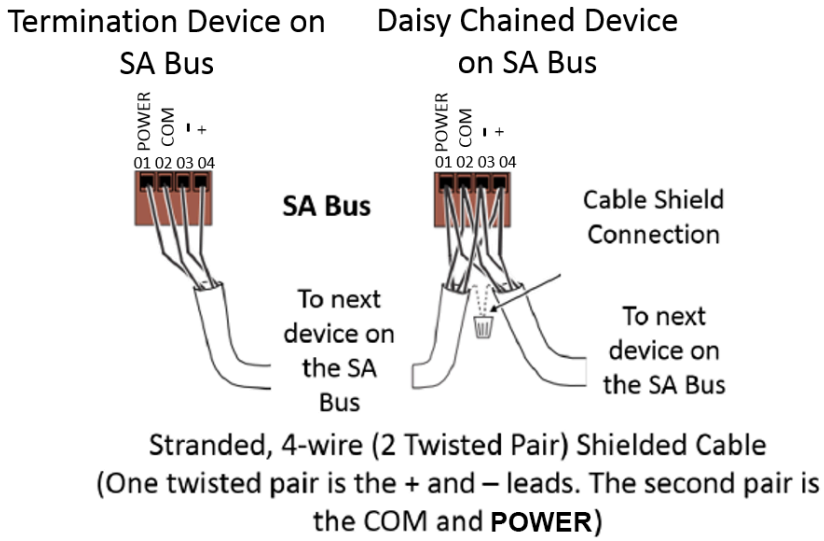

SA/FC bus port

The SA/FC bus port on the front of the expansion module is an RJ-12, 6-position modular jack that provides a connection for devices on the SA bus or a ZFR183x Pro Wireless Router depending on which bus the expansion module is operating on.

The SA/FC bus port is connected internally to the SA/FC bus terminal block. See Communications bus and supply power wiring guidelines for more information about communication bus port functions, ratings and requirements. .

Figure 8: Pin number assignments for sensor, SA bus and FC bus ports on expansion modules

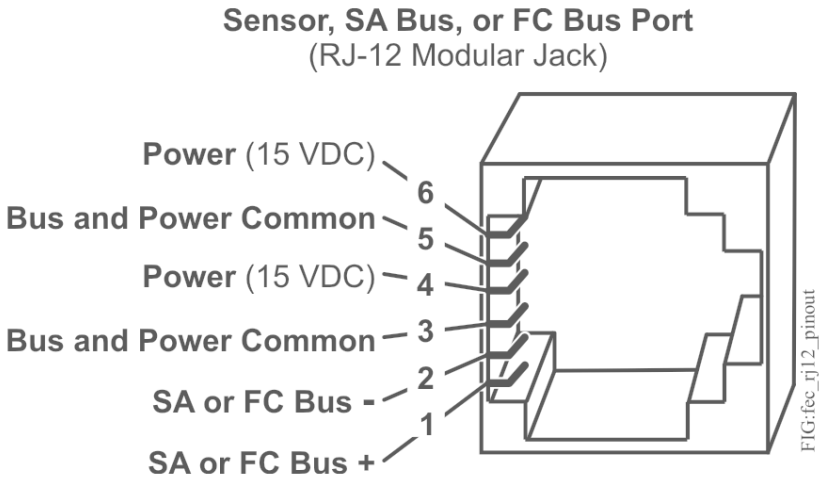

Supply power terminal block

The 24 VAC supply power terminal block is a gray, removable, 2-pin terminal block that fits into a board-mounted pin header on the top right of the expansion module.

Wire the 24 VAC supply power wires from the transformer to the HOT and COM terminals on the terminal plug as shown in Figure 9.

Figure 9: 24 VAC supply power terminal block wiring

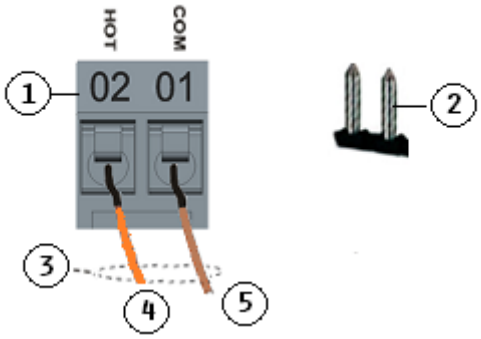

Table 2: Supply power terminal block wiring

	Description
1	Supply power terminal block
2	Supply power terminal header
3	Wires from Johnson Controls 24 VAC, class 2 power transformer
4	24 VAC (Orange wire)
5	COM (Brown wire)

Note: The supply power wire colors may be different on transformers from other manufacturers. Refer to the transformer manufacturer's instructions and the project installation drawings for wiring details.

Important: Connect 24 VAC supply power to the expansion module and all other network devices so that transformer phasing is uniform across the network devices. Powering network devices with uniform 24 VAC supply power phasing reduces noise, interference, and ground loop problems. The expansion module does not require an earth ground connection.

Important: Power wires must be less than 30 meters between expansion module and transformer. Inputs/outputs with cables less than 30 m (100 ft) typically do not require an offset in the software setup. Cable runs over 30 m (100 ft) may require an offset in the input/output software setup.

Terminal wiring guidelines, functions, ratings, and requirements

This section provides further guidelines on input and output wiring, maximum cable length versus load current, and SA Bus and supply power wiring.

Input and Output wiring guidelines

I/O terminal block functions, ratings and requirements provides information and guidelines about the functions, ratings, and requirements for the controller input and output terminals, and Table 4 also references guidelines for determining proper wire sizes and cable lengths.

In addition to the wiring guidelines in I/O terminal block functions, ratings and requirements, observe these guidelines when wiring expansion modules inputs and outputs:

- Run all low-voltage wiring and cables separate from high-voltage wiring.

- All input and output cables, regardless of wire size or number of wires, should consist of stranded, insulated, and twisted copper wires.
- Shielded cable is not required for input or output cables.
- Shielded cable is recommended for input and output cables that are exposed to high electromagnetic or radio frequency noise.
- Inputs/outputs with cables less than 30 m (100 ft) typically do not require an offset in the software setup. Cable runs over 30 m (100 ft) may require an offset in the input/output software setup.

I/O terminal block functions, ratings and requirements

Table 3: I/O terminal block functions, functions, ratings, requirements, and cable guidelines

Terminal Block label	Terminal label	Function, ratings, requirements	Determine wire size and maximum cable length
UNIVERSAL (Inputs)	**+15 V**	**15 VDC Power Source** for active (3-wire) input devices connected to the Universal UI-*n* terminals. Provides 100 mA total current	Same as (Universal) **UI-***n* ⓘ **Note:** Use 3-wire cable for devices that source power from the +15V terminal.
	UI-*n*	**Analog Input - Voltage Mode (0–10 VDC)** 10 VDC maximum input voltage Internal 10k ohm Pull-down	See Guideline **A** in Table 4
		Analog Input - Current Mode (4–20 mA) Internal 100 ohm load impedance ⓘ **Note:** Current loop jumpers must be in the Enabled position to maintain a closed 4-20 mA current loop. See Setting the UI current loop jumpers.	See Guideline **B** in Table 4.
		Analog Input - Resistive Mode (0–600k ohm) Internal 12 V. 15k ohm pull up Qualified Sensors: 0-2k ohm potentiometer, RTD (1k Nickel [Johnson Controls® sensor], 1k Platinum, and A99B Silicon Temperature Sensor) Negative Temperature Coefficient (NTC) Sensor	See Guideline **A** in Table 4.
		Binary Input - Dry Contact Maintained Mode 1 second minimum pulse width Internal 12 V. 15k ohm pull up	See Guideline **A** in Table 4.
	UI-C*n*	**Universal Input Common** for all Universal Input terminals ⓘ **Note:** All Universal UI-C*n* terminals share a common, which is isolated from all other commons.	Same as (Universal) **UI-***n*
BINARY (Inputs)	**BI-***n*	**Binary Input - Dry Contact Maintained Mode** 0.01 second minimum pulse width Internal 18 V. 3k ohm pull up	See Guideline **A** in Table 4.
		Binary Input - Pulse Counter/Accumulator Mode 0.01 second minimum pulse width (50 Hz at 50% duty cycle) Internal 18 V. 3k ohm pull up	
	BI-C*n*	**Binary Input Common** for all Binary Input terminals ⓘ **Note:** All Binary BI-C*n* terminals share a common, which is isolated from all other commons, except the Configurable Output (CO) common (CO-C*n*) when the CO is defined as an Analog Output.	

Table 3: I/O terminal block functions, functions, ratings, requirements, and cable guidelines

Terminal Block label	Terminal label	Function, ratings, requirements	Determine wire size and maximum cable length
CONFIGURABLE (Outputs)	**CO-***n*	**Analog Output - Voltage Mode (0–10 VDC)** 10 VDC maximum output voltage 10 mA maximum output current Required an external load of 1,000 ohm or more. ⓘ **Note:** In instances where the input impedance load exceeds 100k ohm, install a 2k ohm resistor in parallel to the common and 0-10 VDC signal.	See Guideline **A** in Table 4.
		Binary Output - 24 VAC Triac (External Power Source only) Connects CO-*n* to CO-C*n* when activated. External Power Source Requirements: 24 VAC maximum output voltage 0.5 A maximum output current 40 mA minimum load current	See Guideline **C** in Table 4.
	CO-C*n*	**Analog Output Signal Common** All Configurable Outputs (COs) defined as Analog Outputs (AOs) share a common, which is isolated from all other commons except the Binary Input common. **Binary Output Signal Common** All Configurable Outputs (COs) defined as Binary Outputs are isolated from all other commons, including other CO commons.	Same as (Configurable) **CO-***n*.
ANALOG (Outputs)	**AO-***n*	**Analog Output - Voltage Mode (0–10 VDC)** 10 VDC maximum output voltage 10 mA maximum output current Required an external load of 1,000 ohm or more. ⓘ **Note:** The Analog Output (AO) operates in the Voltage Mode when connected to devices with impedances greater than 1,000 ohm. Devices that drop below 1,000 ohm may not operate as intended for Voltage Mode applications.	See Guideline **C** in Table 4.
		Analog Output - Current Mode (4–20 mA) Requires and external load between 0 and 300 ohm. ⓘ **Note:** The Analog Output (AO) operates in the Current Mode when connected to devices with impedances less than 300 ohm. Devices with impedances greater than 300 may not operate as intended for Current Mode applications.	
	AO-C*n*	**Analog Output Signal Common** for all Analog Output terminals. ⓘ **Note:** All Analog Output Common terminals (AO-C*n*) share a common, which is isolated from all other commons.	
BINARY (Output)	**BO-***n*	**Binary Output - 24 VAC Triac** (External Power Source) Connects BO-*n* to BO-C*n* when activated. External Power Source Requirements: 24 VAC maximum output voltage 0.5 A maximum output current 40 mA minimum load current	See Guideline **C** in Table 4.
	BO-C*n*	**Binary Output Common** for all Binary Output terminals. ⓘ **Note:** Each Binary Output Common terminal (BO-C*n*) is isolated from **all** other commons, including other Binary Output Common terminals.	

Cable and wire length guidelines

Table 4 defines cable length guidelines for the various wire sizes that may be used for wiring low-voltage (<30 V) input and outputs. The required wire sizes and lengths for high-voltage (>30 V) Relay Outputs are determined by the load connected to the relay, and local, national or regional electrical codes.

Table 4: Cable length guidelines

Guideline	Wire size/Gauge and type	Maximum cable length and type	Assumptions
A	1.0 mm (18 AWG) stranded copper	457 m (1,500 ft) twisted wire	100 mV maximum voltage drop Depending on the cable length and the connected input or output device, you may have to define an offset in the setup software for the input or output point.
	0.8 mm (20 AWG) stranded copper 297 m (975 ft) twisted wire	297 m (975 ft) twisted wire	
	0.6 mm (22 AWG) stranded copper 183 m (600 ft) twisted wire	183 m (600 ft) twisted wire	
	0.5mm (24 AWG) stranded copper 107 m (350 ft) twisted wire	107 m (350 ft) twisted wire	
B	1.0 mm (18 AWG) stranded copper	229 m (750 ft) twisted wire	100 mV maximum voltage drop Depending on the cable length and the connected input or output device, you may have to define an offset in the setup software for the input or output point.
	0.8 mm (20 AWG) stranded copper 297 m (975 ft) twisted wire	137 m (450 ft) twisted wire	
	0.6 mm (22 AWG) stranded copper 183 m (600 ft) twisted wire	91 m (300 ft) twisted wire	
	0.5 mm (24 AWG) stranded copper 107 m (350 ft) twisted wire	61 m (200 ft) twisted wire	
C	See Figure 10 to select wire size/gauge. Use stranded copper wire.	See Figure 10 to determine cable length. Use twisted wire cable.	N/A

Maximum cable length versus load current

Use the following figure to estimate the maximum cable length relative to the wire size and the load current (in mA) when wiring inputs and outputs.

Note: Figure 10 applies to low-voltage (<30 V) inputs and outputs only.

Figure 10: Maximum wire length for low-voltage (<30 V) Inputs and Outputs by current and wire size

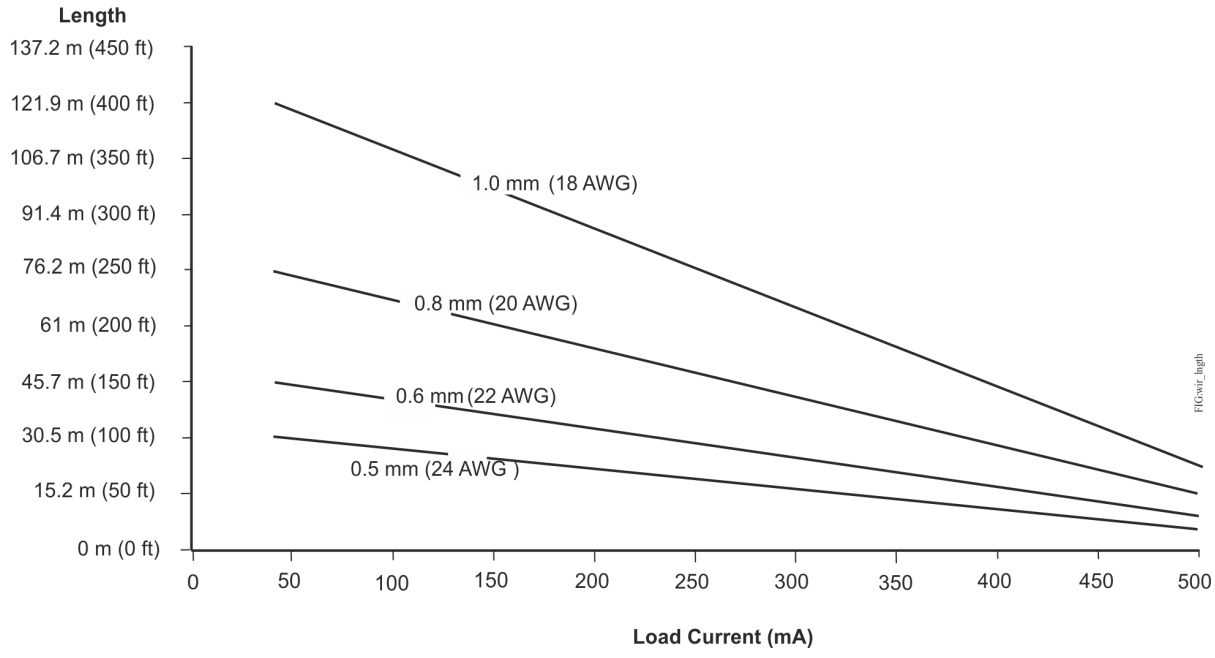

Communications bus and supply power wiring guidelines

Table 5 provides information about the functions, ratings, and requirements for the communication bus and supply power terminals. The table also provides guidelines for wire sizes, cable types, and cable lengths for wiring the expansion module's communication bus and supply power.

In addition to the guidelines in Table 5, observe the following guidelines when wiring an FC bus, SA bus, or the 24 VAC supply power:

- Run **all** low-voltage wiring and cables separate from high-voltage wiring.
- All SA and FC bus cables, regardless of wire size, should be twisted, insulated, stranded copper wire.
- Shielded cable is strongly recommended for all SA and FC bus cables.
- Refer to the *FX-PC Series Controllers MS/TP Communications Bus Technical Bulletin (LIT-12011670)* for detailed information regarding wire size and cable length requirements for SA buses.

Table 5: Communications bus and supply power terminal block functions, ratings, requirements, and cable guidelines

Terminal block/ Port label	Terminal labels	Function, electrical ratings/Requirements	Recommended cable type
FC BUS or **SA BUS**	**+** **-**	FC or SA Bus Communications	FC Bus: 0.6 mm (22 AWG) stranded, 3-wire twisted, shielded cable recommended. SA Bus: 0.6 mm (22 AWG) stranded, 4-wire (2 twisted-pairs), shielded cable recommended. **Note:** On the SA Bus, the + and - wire are one twisted pair, and the COM and PWR are the second twisted pair of wires.
	COM	Signal Reference (Common) for FC or SA Bus communications	
	SHD or **PWR**	**SHD on FC Bus:** Isolated terminal (optional shield drain connection **PWR on SA Bus:** 15 VDC power lead connection. (Maximum total current draw for SA bus is 240 mA.)	
SA/FC BUS (Port)		RJ-12 6-Position Modular Connector provides: • FC or SA Bus Communications • FC or SA Bus Signal Reference and 15 VDC Common	24 AWG 3-pair CAT 3 Cable <30.5 m (100 ft)
24V~	**HOT**	**24 VAC Power Supply - Hot** Supplies 20–30 VAC (Nominal 24 VAC)	0.8 mm to 1.0 mm (18 AWG) 2-wire
	COM	**24 VAC Power Supply - Common** (Isolated from all other Common terminals on controller.)	

Note: See table labeled *Cable length guidelines for recommended wire sizes for low-voltage (<30 V) Inputs and Outputs* to determine wire size and cable lengths for cables.

Note: The SA Bus and FC Bus wiring recommendations in this table are for MS/TP bus communications at 38,400 baud. For more information, refer to the *FX-PC Series Controllers MS/TP Communications Bus Technical Bulletin (LIT-12011670).*.

Termination diagrams

A set of Johnson Controls termination diagrams provides details for wiring inputs and outputs to the expansion modules. See the figures in this section for the applicable termination diagrams.

Note: References to the analog output apply to the XPM09090 model only.

Table 6: Termination details

Type of field device	Type of Input/ Output	Termination diagrams
Temperature Sensor	UI	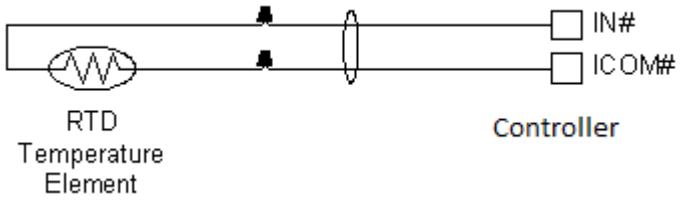
Voltage Input - External Source	UI	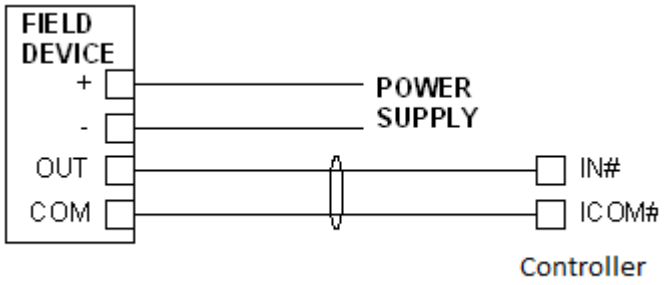
Voltage Input - Internal Source	UI	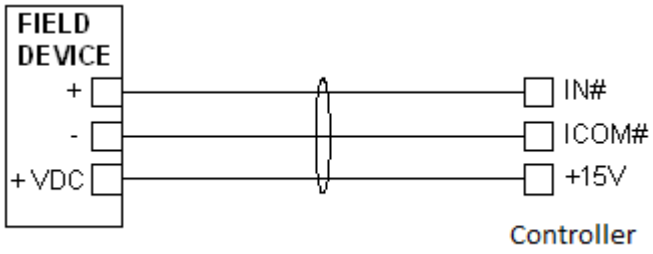
Voltage Input (Self-Powered)	UI	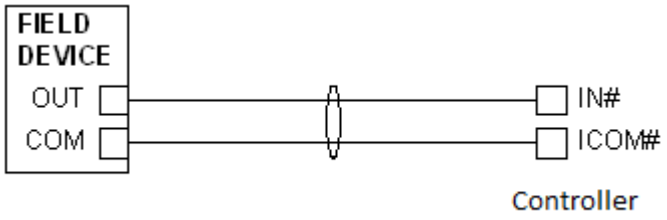
Current Input - External Source (Isolated)	UI	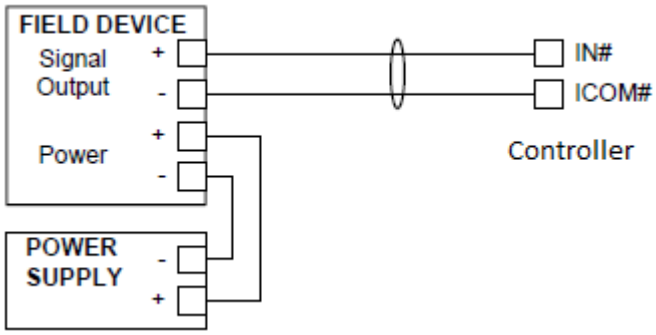

Table 6: Termination details

Type of field device	Type of Input/ Output	Termination diagrams
Current Input - Internal Source (2-wire)	UI	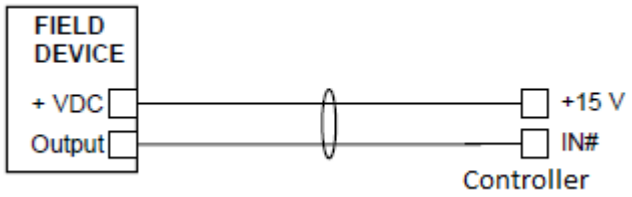
Current Input - Internal Source (3 wire)	UI	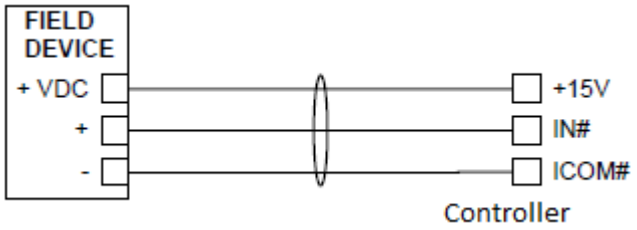
Current Input - External Source (in Loop)	UI	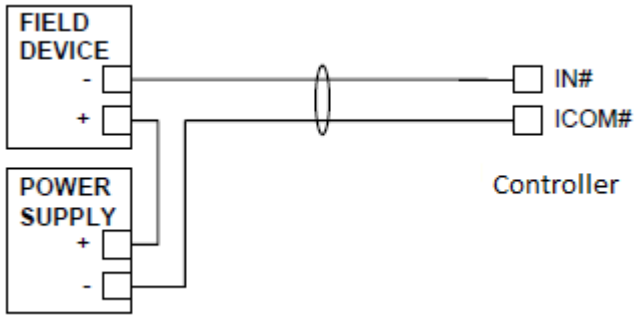
Feedback from EPP-1000	UI	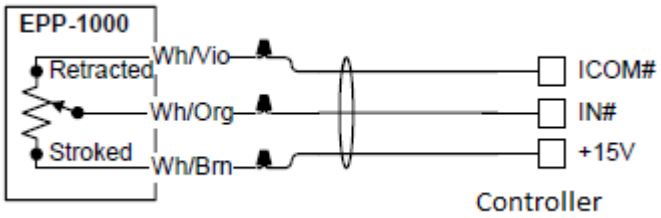
Dry Contact (Binary Input)	UI or BI	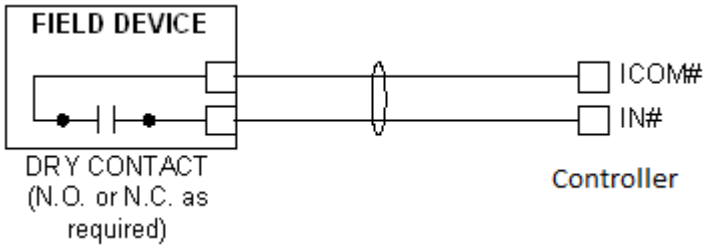

Table 6: Termination details

Type of field device	Type of Input/ Output	Termination diagrams
0–10 VDC Output to Actuator (External Source)	CO or AO	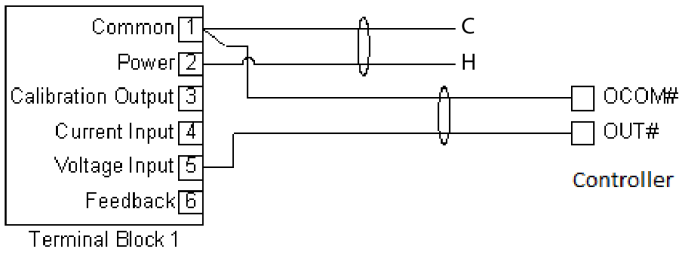
0–10 VDC Output to Actuator (Internal Source)	CO or AO	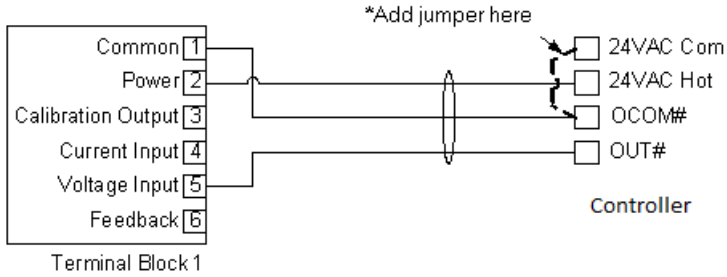
Current Output	CO or AO	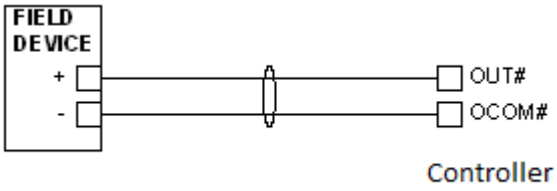
24 VAC Triac Output (Switch Low, External Source)	CO or AO	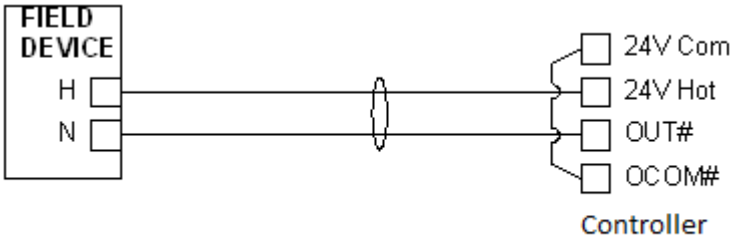
Analog Output (Current)	AO	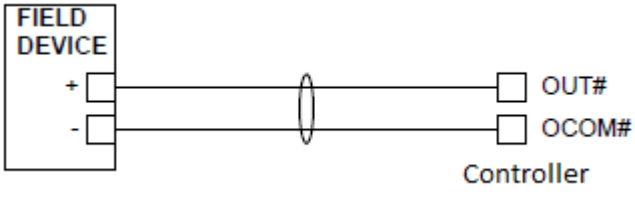

Table 6: Termination details

Type of field device	Type of Input/ Output	Termination diagrams
4–20 mA Output to Actuator	AO	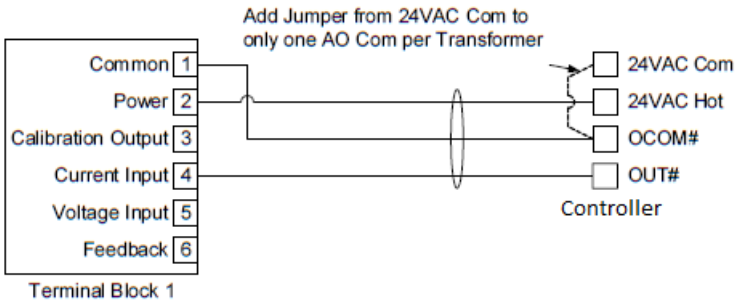
4–20 mA Output to Actuator	AO	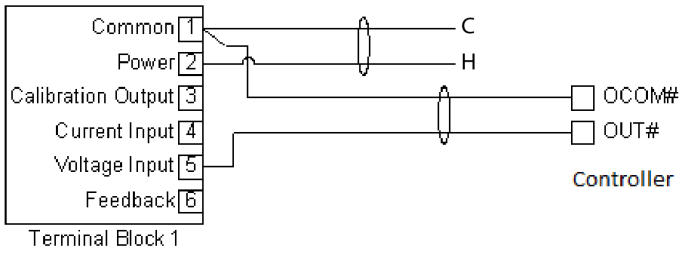
Incremental Control to Actuator (Switch Low, Externally Sourced)	BO	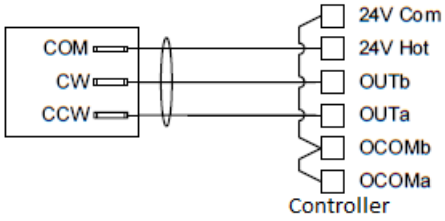
24 VAC Binary Output (Switch Low, Externally Sourced)	BO	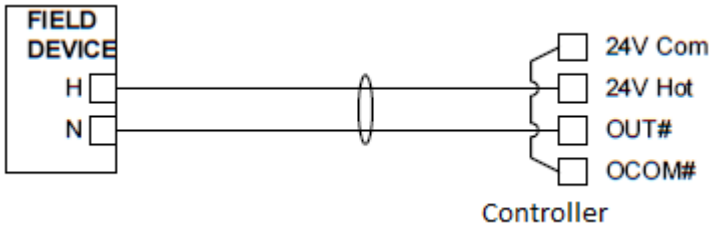
24 VAC Binary Output (Switch High, Externally Sourced)	BO	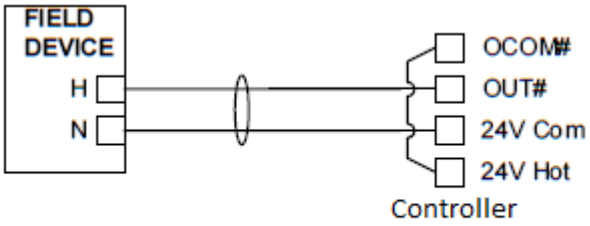

Table 6: Termination details

Type of field device	Type of Input/ Output	Termination diagrams
Incremental Control to Actuator (Switch High, Externally Sourced)	BO	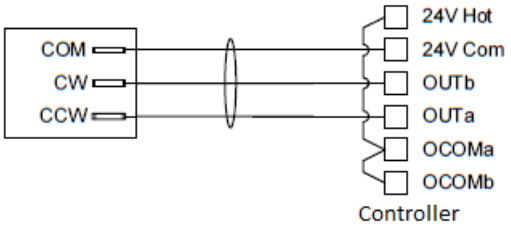
Network Stat with Phone Jack (Fixed Address = 199)	SA Bus	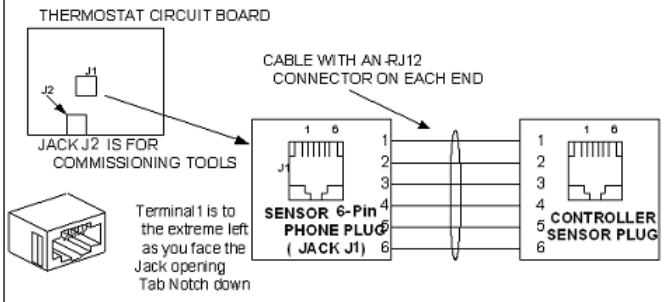 **Note:** The bottom jack (J2) on the TE-700 and TE-6x00 Series Sensors is not usable as a zone bus or an SAB connection.
Network Stat with Terminals Addressable	SA Bus	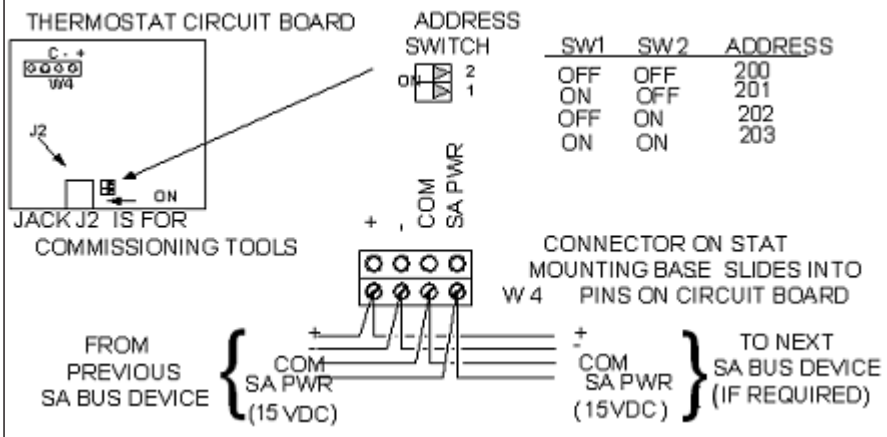
Network Stat with Terminals (Fixed Address = 199)	SA Bus	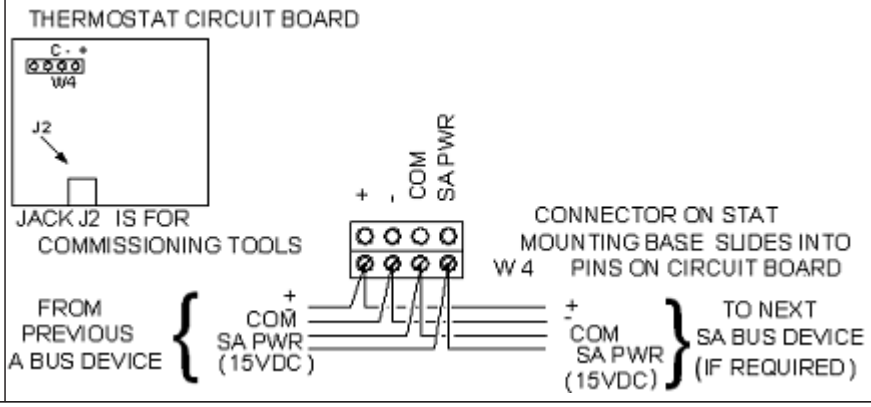

Setup and adjustments

Important: Electrostatic discharge can damage controller components. Use proper electrostatic discharge precautions during installation, setup, and servicing to avoid damaging the controller.

Configuring wireless communications

To configure an expansion module for use with the ZFR183x Pro Series Wireless Field Bus system, complete the following steps:

1. Disconnect the 24 VAC supply from the expansion module.
2. Wire the input/output terminals and FC bus.

   Note: In wireless network applications, do not connect any wires to the FC bus terminal block.
3. **Important:** Before the XPM expansion module is powered on, connect the ZFR183x Pro Wireless Field Bus Router to the FC bus port (RJ-12 modular jack) on the front of the device.
4. Ensure that the expansion module's rotary switches are set to the correct device address. For details about setting a device address, see Setting the device address.
5. Reconnect the 24 VAC supply to the expansion module.

Setting the device address

FX-PC Series expansion modules are devices on MS/TP (FC or SA) buses. Before you operate expansion modules on a bus, you **must** set a valid and unique device address for each expansion module on the bus. You set the XPM device address by setting the positions of the Device Address rotary switches at the top of the expansion module.

The following table describes the valid rotary switch device addresses for communications bus applications.

Table 7: Switch device addresses

FC Bus communication mode	Valid device address range
Wired MS/TP communication	4-127 **Note:** Addresses 0-3 are reserved and not for use on expansion modules.
ZFR Pro wireless communication	4-127 **Note:** Addresses 0-3 are reserved and not for use on expansion modules.

The device address is a decimal address that is set using three rotary switches located at the top of the expansion module. In the following figure, the switches are set to 1 2 3, designating this expansion module's device address as 123.

Figure 11: Device address rotary switch block

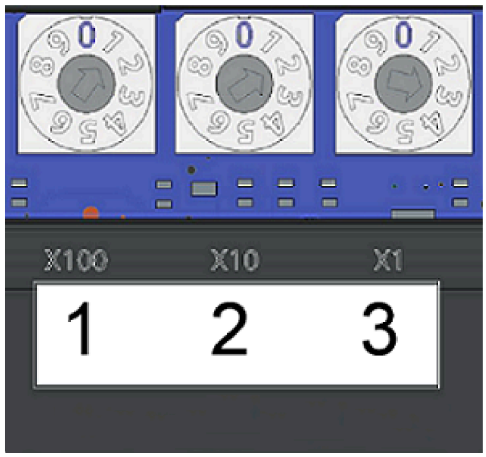

The device address must match the device address defined in the Controller Configuration Tool (CCT) under **Define Hardware > Network Settings**.

To set the device addresses on XPM expansion modules, complete the following steps:

1. Set a unique and sequential device address for each of the devices connected on the FC or SA Bus, starting with device address 4.
2. To ensure the best bus performance, set sequential device addresses with no gaps in the device address range (4, 5, 6, 7, 8, 9, and so on). The devices do not need to be physically connected on the bus in their numerical device address order.
3. Write each expansion module's device address on the white label below the device address rotary switch block on the expansion module's cover.

   Refer to the *FX-PC Series Controllers MS/TP Communications Bus Technical Bulletin (LIT-12011670)* for more information about device addresses and how to set them on MS/TP buses.

Removing a terminal block

To remove a terminal block from the circuit board, complete the following steps:

Note: You need a flat blade screwdriver to remove the terminal block.

1. To prevent any possibility of damage from an accidental short, **remove power from the expansion module**.
2. Underneath the terminal block, in the small gap between the bottom of the terminal block and the circuit board, insert the flat blade of the screwdriver.

Figure 12: Terminal block

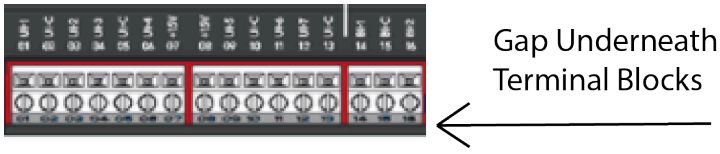

3. To detach the left-hand side of the terminal block, position the flat blade underneath the terminal block to the left, and push down the screwdriver handle. When you do this, you are using the screwdriver as a lever to pry up the terminal block.
4. To detach the right-hand side of the terminal block, position the flat blade underneath the terminal block to the right, and push down the screwdriver handle.
5. If necessary, repeat steps 3 and 4 until the terminal block is removed.

Removing the expansion module cover

- **Important:** Electrostatic discharge can damage expansion module components. Use proper electrostatic discharge precautions during installation, setup, and servicing to avoid damaging the expansion module.
- **Important:** Disconnect all power sources to the expansion module before removing cover and changing the position of any jumper on the expansion module. Failure to disconnect power before changing a jumper can result in damage to the expansion module and void any warranties.

The expansion module cover is held in place by four plastic latches that extend from the base and snap into slots on the inside of the housing cover.

To remove the expansion module cover, complete the following steps:

1. Place your fingertips under the two cover lift tabs on the sides of the housing cover and gently pry the top of the cover away from the base to release the cover from the two upper latches.
2. Pivot the top of the cover further to release it from the lower two latches.
3. Replace the cover by placing it squarely over the base, and then gently and evenly push the cover on to the latches until they snap into the latched position.

Figure 13: XPM with cover removed showing EOL switch and jumper positions (XPM09090 model shown)

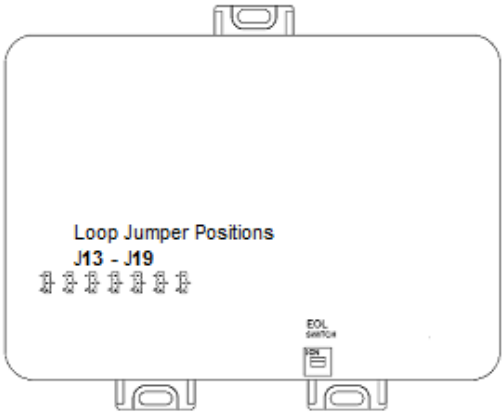

Setting the End-of-Line (EOL) switch

Each XPM expansion module has an EOL switch, which, when set to ON (up), sets the expansion module as a terminating device on the bus. The default EOL switch position is OFF (down).

Figure 14: End-of-Line switch positions



To set the EOL switch on an expansion module, complete the following steps:

1. Determine the physical location of the expansion module on the SA or FC bus.
2. Determine if the expansion module must be set as a terminating device on the bus.

Note: SA and FC buses have different EOL termination rules. For detailed information about EOL termination rules and EOL switch settings, refer to the *FX-PC Series Controllers MS/TP Communications Bus Technical Bulletin (LIT-12011670)*.

3. If the expansion module is a terminating device on the FC bus or SA bus, set the EOL switch to ON. If the expansion module is not a terminating device on the bus, set the EOL switch to Off.

   When an expansion module is connected to power with its EOL switch set to ON, the amber EOL LED on the controller cover is illuminated.

Setting the UI current loop jumpers

CAUTION

Risk of Electric Shock:

Disconnect supply power to the expansion module before attempting to adjust the UI current loop jumpers. Failure to disconnect the supply power may result in electric shock.

ATTENTION

Mise En Garde: Risque de décharge électrique:

Débrancher l'alimentation de l'controller avant tout réglage du UI current loop jumpers. Le non-respect de cette précaution risque de provoquer une décharge électrique.

The UI current loop jumpers are on the circuit board under the expansion module cover near the UI terminals (Figure 13). When a UI is defined (in the system software) as a 4-20 mA Analog Input, set the UI's current loop jumper to the Enabled position (Figure 15).

Figure 15: UI Current loop jumper positions

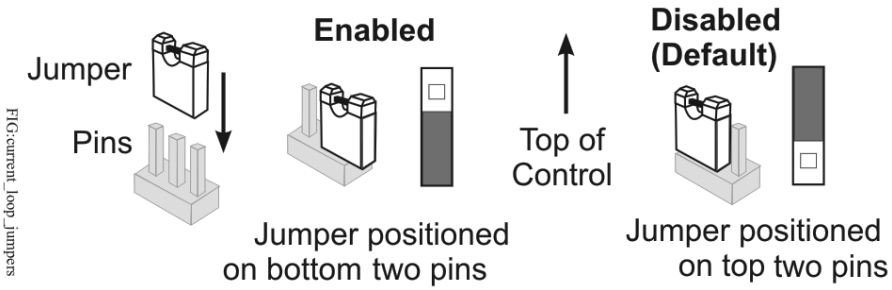

Setting the current loop jumper to the Enabled position, connects an internal 100 ohm resistor across the UI terminals, which maintains the 4-20 mA current loop circuit even when power to the expansion module is interrupted or off.

Important: Current Loop jumpers must be in the Disabled (default) position for all UIs that are not set up to operate as 4-20 mA analog inputs.

Important: A current loop jumper must be in the Enabled position to maintain a closed 4-20 mA current loop.

The following tables identify the current loop switches associated with each UI on the XPM09090 and XPM04060 models.

Table 8: XPM09090 UI Inputs and jumper labels

Universal Input label	Jumper label on circuit board
UI-1	J13
UI-2	J14
UI-3	J15
UI-4	J16
UI-5	J17
UI-6	J18
UI-7	J19

Table 9: XPM04060 UI Inputs and jumper labels

Universal Input label	Jumper label on circuit board
UI-1	J10
UI-2	J11
UI-3	J12

Setting up a local display

XPM models do not have an integral display, but you can connect it to an FX-DIS1710 or DLK0350 Local Controller Display. For detailed information about setting up and operating a remotely connected FX-DIS1710 display, refer to the *FX-DIS Local Controller Display Technical Bulletin (LIT-12011666)* or *FX Local Controller Display User Guide (LIT-1201398)*.

Commissioning

You commission expansion modules with the Controller Configuration Tool (CCT) software using either the Connected Workflow Wireless MS/TP Converter (CWCVT), Mobile Access Portal (MAP) Gateway, a ZFR wireless dongle, or in passthrough mode when connected to FX-SNC. Refer to the *Controller Tool Help (LIT-12011147)* for detailed information on commissioning expansion modules.

Troubleshooting expansion modules

Observe the Status LEDs on the front of the expansion module. Table 10 provides LED status indicator information for troubleshooting the expansion module. To troubleshoot a local controller display, refer to the *FX-DIS Local Controller Display Technical Bulletin (LIT-12011666)* or *FX Local Controller Display User Guide (LIT-1201398)*.

LED status and states

Table 10: Status LEDs and description of LED states

LED label	LED color	Normal LED state	Description of LED states
POWER	Green	On Steady	Off Steady = No Supply Power or the controller's polyswitch/resettable fuse is open. Check Output wiring for short circuits and cycle power to controller. On Steady = Power Connected
FAULT	Red	Off Steady	Off Steady = No Faults On Steady = Device Fault; no application loaded Blink - 2 Hz = Startup in progress, not ready for normal operation Rapid blink = SA Bus communications issue

Table 10: Status LEDs and description of LED states

LED label	LED color	Normal LED state	Description of LED states
SA/FC BUS	Green	Blink - 2 Hz	Blink - 2 Hz = Data Transmission (normal communication) Off Steady = No Data Transmission On Steady = Communication lost, waiting to join communication ring
EOL	Amber	Off (Except on terminating devices)	On Steady = EOL switch in ON position Off Steady = EOL switch in Off position

Ordering information and accessories

The following tables provide the product code number and description for the XPM models and accessories.

Table 11: XPM Series ordering information

Product code number	Description
F4-XPM04060-0	10-point Input/Output Expansion Module Includes: MS/TP communication; 10 points (3 UI, 1 BI, 4 CO, 2 BO); 24VAC input
F4-XPM09090-0	18-point Input/Output Expansion Module Includes: MS/TP communication; 18 points (7 UI, 2 BI, 4 CO, 2 AO, 3 BO); 24VAC input
F4-XPM18000-0	18-point Input Expansion Module Includes: MS/TP communication; 18 points (18 BI); 24VAC input

ⓘ **Note:** XPM models that comply with Buy American Act requirements are available. To order the model that complies with the Buy American Act requirements, add a G to the end of the product code. For example, F4-XPM04060-0G.

Table 12: XPM series accessories (order separately)

Product Code Number	Description
TL-CCT-0	Controller Configuration Tool (CCT) software
FX-FCP-0	Facility Explorer Equipment Controller Firmware Package Files required for CCT
TL-CWCVT-0	Communications converter that provides a temporary wireless connection between a host device and equipment controllers that support the BACnet MS/TP protocol.
WRZ Series Wireless Room Sensors	Refer to the *WRZ Series Wireless Room Sensors Product Bulletin (LIT-12011653)* for specific sensor model descriptions.
WRZ-7860-0	Receiver for One-to-One Wireless Room Sensing Systems - functions with WRZ Series Sensors Refer to the *WRZ-7860 Receiver for One-to-One Wireless Room Sensing Product Bulletin (LIT-12011640)* for a list of available products.
WRZ-SST-120	Wireless System Survey Tool. For use with the lower power 10mW WRZ and WRZ-7860 systems. Refer to the *WRZ-SST-120 Wireless Sensing System Tool Installation Guide (24-10563-55)* for usage instructions.
ZFR-HPSST-0	Wireless System Survey Tool. For use with the higher power WRG1830/ZFR183x System and lower power WRZ Sensors (10mW). Refer to the *ZFR-HPSST-0 Wireless Sensing System Tool Installation Guide (Part No. 24-11461-00012)* for usage instructions.
WRG1830/ZFR183x Pro Series Wireless Field Bus System	For more information on products needed for wireless field bus installations and for a list of available products, refer to the *WRG1830/FX-ZFR183x Pro Series Wireless Field Bus System Catalog Page (LIT-1901153)*.
Y64T15-0	Transformer, 120/208/240 VAC Primary to 24 VAC Secondary, 92 VA, Foot Mount, 72.2 cm (30 in.), Primary Leads and 76.2 cm (30 in.) Secondary Leads, Class 2
Y65A13-0	Transformer, 120 VAC Primary to 24 VAC Secondary, 40 VA, Foot Mount (Y65AS), 20.32 cm (8 in.), Primary Leads and 76.2 cm (30 in.) Secondary Leads, Class 2
Y65T31-0	Transformer, 120/208/240 VAC Primary to 24 VAC Secondary, 40 VA, Foot Mount (Y65AR+), 20.32 cm (8 in.), Primary Leads and Secondary Screw Terminals, Class 2
Y65T42-0	Transformer, 120/208/240 VAC Primary to 24 VAC Secondary, 40 VA, Hub Mount (Y65SP+), 20.32 cm (8 in.), Primary Leads and Secondary Screw Terminals, Class 2
ACC-TBKINOUT-0	Input and Output terminal block replacement kit for SNC, CG series, CV series, CCM, and XPM products. Kit includes 5 of each 2, 3, and 4 position Input and Output terminal blocks. 30 terminal blocks in total.
ACC-TBKPWFCSA-0	Power, FC Bus, and SA Bus terminal block replacement kit for SNC, CG series, CV series, CCM, and XPM products. Kit includes 5 of each terminal block type. 15 terminal blocks in total.

Table 12: XPM series accessories (order separately)

Product Code Number	Description
MS-FIT100-0	The Field Inspection Tool or (FIT) is a portable handheld device with a user interface that is used to test and troubleshoot the BACnet protocol MS/TP RS-485 communications bus that connects supervisory controllers and equipment controllers to field point interfaces. The FIT can be used to check out the wiring of the MS/TP RS-485 bus as well as verify proper communications of supervisory controllers and equipment controllers connected to the bus. The FIT can be used on both the FC Bus and SA Bus.
TL-BRTRP-0	Portable BACnet/IP to MS/TP Router

XPM Expansion Modules technical specifications

Table 13: Technical specifications

Specification	Description
Power requirement	24 VAC (nominal, 20 VAC minimum/30 VAC maximum), 50/60 Hz, Power Supply Class 2 (North America), Safety Extra-Low Voltage (SELV) (Europe)
Power consumption	14 VA maximum ⓘ **Note:** The VA rating does not include any power supplied to the peripheral devices connected to Binary Outputs (BOs) or Configurable Outputs (COs), which can consume up to 12 VA for each BO or CO; for a possible total consumption of an additional 84 VA (maximum).
Power source	+15 VDC power source terminals provide 100 mA total current. ⓘ **Note:** Only present on XPM09090 and XPM04060 models. • **F4-XPM09090-0:** Quantity 2-located in Universal Input terminals for active (3-wire) input devices. • **F4-XPM04060-0:** Quantity 1-located in Universal Input terminals for active (3-wire) input devices.
Ambient conditions	**Operating:** 0°C to 50°C (32°F to 122°F); 10% to 90% RH noncondensing ⓘ **Note:** For UL 864 10th Edition/cUL applications, operating: 0°C to 49°C (32°F to 120°F) **Storage:** -40°C to 80°C (-40°F to 176°F); 5% to 95% RH noncondensing
Communications protocol	BACnet MS/TP; Zigbee Wireless also supported (at FC Bus and for Sensors) with additional hardware. XPM expansion modules support Zigbee wireless functionality for the FC bus and for sensors with additional hardware.
Device addressing for BACnet MS/TP	Decimal address set using the three rotary switches; valid controller device addresses 4-127
Communications bus	RS-485 3-wire FC Bus between the supervisory controller and expansion modules 4-wire SA Bus between equipment controller, network sensors and other sensor/actuator devices, includes a lead to source 15 VDC supply power (from equipment controller) to bus devices.
Processor	RX64M Renesas® 32-Bit microcontroller
Memory	16 MB flash memory and 8 MB SDRAM
Input and output capabilities	**Universal Inputs:** Defined as 0–10 VDC, 4–20 mA, 0–600k ohms, or Binary Dry Contact **Binary Inputs:** Defined as Dry Contact Maintained or Pulse Counter/Accumulator Mode **Configurable Outputs:** Defined as 0-10 VDC or 24 VAC @500mA Triac BO **Analog Outputs:** Defined as 0–10 VDC or 4–20 mA **Binary Outputs:** Defined as 24 @500mA VAC Triac (external power source only)
Universal Input (UI) Resolution / Analog Output (AO) Accuracy	**Input:** 24-bit Analog to Digital converter **Output:** +/- 200 mV accuracy in 0–10 VDC applications

Table 13: Technical specifications

Specification	Description
Terminations	**Input/Output:** Pluggable Screw Terminal Blocks **SA/FC Bus and Supply Power:** 4-Wire and 2-Wire Pluggable Screw Terminal Blocks **SA/FC Bus Port:** RJ-12 6-Pin Modular Jack
Mounting	Horizontal on single 35 mm DIN rail mount (recommended), or screw mount on flat surface with three integral mounting clips on controller
Housing	**Enclosure material:** ABS and polycarbonate UL94 5VB; Self-extinguishing Protection Class: IP20 (IEC529)
Dimensions (height x width x depth)	**XPM09090-0:** 150 mm x 190 mm x 44.5 mm (5-7/8 in. x 7-1/2 in. x 1-3/4 in.) including terminals and mounting clips **XPM04060-0 and XPM18000-0:** 150 mm x 152 mm x 44.5 mm (5-7/8 in. x 6 in. x 1-3/4 in.) including terminals and mounting clips ⓘ **Note:** Mounting space requires an additional 50 mm (2 in.) space on top, bottom, and front face of controller for easy cover removal, ventilation, and wire terminations.
Weight	**XPM09090-0:** 0.5 kg (1.1 lb) **XPM04060-0 and XPM18000-0:** 0.29 kg (0.64 lb)
Compliance	**United States:** UL Listed, File E107041, CCN PAZX, UL 916, Energy Management Equipment FCC Compliant to CFR47, Part 15, Subpart B, Class A
	Canada: UL Listed, File E107041, CCN PAZX7 CAN/CSA C22.2 No. 205, Signal Equipment Industry Canada Compliant, ICES-003
CE	**Europe:** Johnson Controls declares that this product is in compliance with the essential requirements and other relevant provisions of the EMC Directive and RoHS Directive.
	**Australia and New Zealand:** RCM Mark, Australia/NZ Emissions Compliant
	BACnet International: Certification pending to BACnet Testing Laboratories™ (BTL) Protocol Revision 19 BACnet Smart Actuator (B-SA), based on ANSI/ASHRAE 135-2020
UK CA	**United Kingdom:** Johnson Controls declares that this product is in compliance with Electromagnetic Compatibility Regulations, The Electrical Equipment (Safety) Regulations, and Restriction of the Use of Certain Hazardous Substances in Electrical and Electronic Equipment Regulations.

The performance specifications are nominal and conform to acceptable industry standard. For application at conditions beyond these specifications, consult the local Johnson Controls office. Johnson Controls shall not be liable for damages resulting from misapplication or misuse of its products.

Repair information

If an expansion module fails to operate within its specifications, replace the expansion module. For a replacement expansion module, contact your Johnson Controls representative.

Product warranty

This product is covered by a limited warranty, details of which can be found at www.johnsoncontrols.com/buildingswarranty.

Software terms

Use of the software that is in (or constitutes) this product, or access to the cloud, or hosted services applicable to this product, if any, is subject to applicable end-user license, open-source software

information, and other terms set forth at www.johnsoncontrols.com/techterms. Your use of this product constitutes an agreement to such terms.

Patents

Patents: https://jcipat.com

Single point of contact

APAC	EU	UK	NA/SA
JOHNSON CONTROLS C/O CONTROLS PRODUCT MANAGEMENT NO. 32 CHANGJIANG RD NEW DISTRICT WUXI JIANGSU PROVINCE 214028 CHINA	JOHNSON CONTROLS VOLTAWEG 20 6101 XK ECHT THE NETHERLANDS	JOHNSON CONTROLS TYCO PARK GRIMSHAW LANE MANCHESTER M40 2WL UNITED KINGDOM	JOHNSON CONTROLS 5757 N GREEN BAY AVE. GLENDALE, WI 53209 USA

Contact information

Contact your local Johnson Controls representative: www.johnsoncontrols.com/locations

Contact Johnson Controls: www.johnsoncontrols.com/contact-us

© 2026 Johnson Controls. All rights reserved. All specifications and other information shown were current as of document revision and are subject to change without notice.