PCA3613 Advanced Application Programmable Controller Installation Guide

Part No. 24-10143-1175 Rev. F

2026-02-17

Application

The PCA3613 Advanced Application Programmable Controller is part of the Facility Explorer® Programmable Controller (FX-PC) family. The PCA36 controllers run pre-engineered and user-programmed applications and provides the inputs and outputs required to monitor and control a wide variety of HVAC and other facility equipment.

PCA3613 controllers operate on an RS-485 BACnet® MS/TP Bus as BACnet Advanced Application Controllers (B-AACs) and integrate into Johnson Controls® and third-party BACnet systems.

controllers include an integral real-time clock, which enables the controllers to monitor and control schedules, calendars, and trends, and operate for extended periods of time as stand-alone controllers when offline from the system network.

Switchable Communications protocol

The PCA3613 controllers can communicate using BACnet MS/TP, N2, or wireless Zigbee. By default, the FX-PC family controllers and network sensors communicate using the standard BACnet® protocol, based on the ANSI/ASHRAE 135-2004. FX-PCA field controllers are BTL-listed as BACnet Advanced Application Controllers (B-AACs). The BACnet protocol is a standard for ANSI, ASHRAE, and the International Standards Organization (ISO) for building controls. The Controller Configuration Tool (CCT) can be used to switch the Field Bus communications protocol in FX-PCA Controllers to be either the standard BACnet MS/TP or the N2 protocol. BACnet MS/TP is the default communications protocol for all new controllers. Switchable communications protocols provide a cost-effective upgrade and modernization path for customers with existing N2 controllers. *The Modernization Guide for Legacy N2 Controllers (LIT-12012045)* and the controller-specific documentation provide installation and commissioning support and include tips for efficient and safe replacement. Refer to the *N2 Compatibility Options* chapter of the *Controller Tool Help (LIT-12011147)* for information about mapping N2 Objects in controllers with switchable communications protocols. The N2-capable FX-PC controllers can be used as functional replacements for legacy N2 controllers.

The N2-capable FX-PC controllers:

- have the I/O quantities and characteristics of the FX-PC family controllers
- must be programmed with CCT, which has programming capabilities that are similar (but not identical) to HVACPro, GX9100, GPL, and other legacy tools
- support SA Bus devices
- support WRZ wireless sensors from the controller using the WRZ7860 receiver when configured for BACnet MS/TP communication

The N2-capable FX-PC controllers:

- do not support Zone Bus (for example, TMZ sensors and M100 actuators)
- do not support pass through in the commissioning mode
- do not support remote downloading or commissioning using BACnet routing
- do not support wireless connection to the N2 bus

Fast persistence

The PCA3613 model has a fast persistence feature that allows you to retain data values at a configurable interval, up to once per second. Persistence refers to how often samples of data are stored locally. This upgrade to the persistence feature ensures that in the event of a problem, such as a loss of power, more recent data can be retrieved up to the rate that the data is persisted, minimizing the potential loss of data. When power is restored, previously persisted data, up to the rate of persistence, is still available and accessible. When persistence is configured for once per second, you risk losing only the most recent one second of data before the power loss. Persisting data may be essential for situations that require greater data accuracy. This may include certain methods of utility data collection and billing.

Attributes that can be persisted in the PCA3613 include: Counter Input Present Value Attributes, Binary Input, Binary Output, and Binary Value COS Counts and Active Time Attributes, and PID/PRAC tuning parameters.

North American emissions compliance

United States

This equipment has been tested and found to comply with the limits for a Class A digital device pursuant to Part 15 of the FCC Rules. These limits are designed to provide reasonable protection against harmful interference when this equipment is operated in a commercial environment. This equipment generates, uses, and can radiate radio frequency energy and, if not installed and used in accordance with the

instruction manual, may cause harmful interference to radio communications. Operation of this equipment in a residential area may cause harmful interference, in which case the users will be required to correct the interference at their own expense.

Warning (Part 15.21)

Changes or modifications not expressly approved by the party responsible for compliance could void the user's authority to operate the equipment.

Canada

This Class (A) digital apparatus meets all the requirements of the Canadian Interference-Causing Equipment Regulations.

Cet appareil numérique de la Classe (A) respecte toutes les exigences du Règlement sur le matériel brouilleur du Canada.

Industry Canada Statement(s)

This device complies with Industry Canada licence-exempt RSS standard(s). Operation is subject to the following two conditions:

1. This device may not cause interference, and
2. This device must accept any interference, including interference that may cause undesired operation of the device.

Le présent appareil est conforme aux CNR d'Industrie Canada applicables aux appareils radio exempts de licence. L'exploitation est autorisée aux deux conditions suivantes :

1. L'appareil ne doit pas produire de brouillage, et
2. L'utilisateur de l'appareil doit accepter tout brouillage radioélectrique subi, même si le brouillage est susceptible d'en compromettre le fonctionnement.

Installation

Observe the following guidelines when installing a controller:

- To minimize vibration and shock damage, transport the controller in the original container.
- Verify that all parts shipped with the controller.
- Do not drop the controller or subject it to physical shock.

Parts included

- One Advanced Application Controller.
- One installation instructions sheet.

Materials and special tools needed

- Three fasteners appropriate for the mounting surface (M4 screws or #8 screws)
- One 23 cm (9.125 in.) or longer piece of 35 mm DIN rail and appropriate hardware for DIN rail mount (only)
- Small straight-blade screwdriver for securing wires in the terminal blocks

PCA3613 physical features

Figure 1: PCA3613 physical features

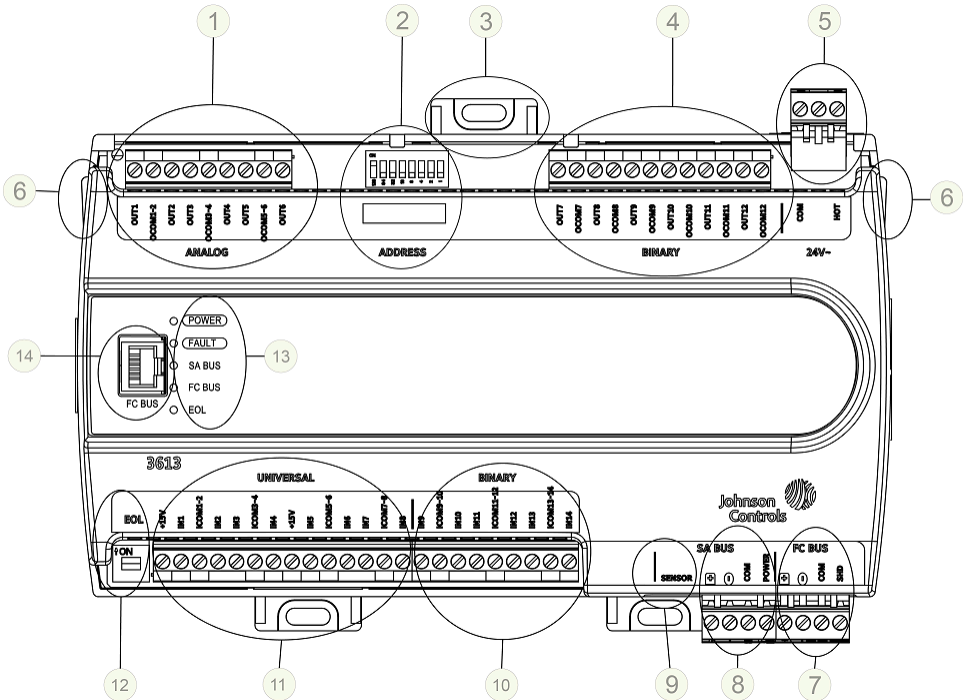

Table 1: Physical features

	Physical feature: description and references
1	Analog Output (AO) Terminal Block: Can be defined as Voltage Analog Output (0–10 VDC) or Current Analog Output (4–20 mA) (see Table 2)
2	Device Address DIP Switch Block (see Setting the Device Addresses)
3	Mounting clip
4	Binary Outputs (BO) Terminal Block: 24 VAC Triac (see Table 2)
5	24 VAC, Class 2/SELV Supply Power Terminal Block (see Supply power terminal block)
6	Cover Lift Tab (One of Two)
7	FC Bus Terminal Block (see FC Bus terminal block)
8	SA Bus Terminal Block (see SA Bus terminal block)
9	Sensor Port: (SA Bus) RJ-12 6-Pin Modular Jack (see SA Bus port)
10	Binary Input (BI) Terminal Block: Dry Contact Maintained or Pulse Counter/Accumulator Mode (see Terminal wiring guidelines, functions, ratings, and requirements
11	Universal Inputs (UI) Terminal Block: Can be defined as Voltage Analog Input (0–10 VDC), Current Analog Input (4–20 mA), Resistive Analog Inputs (0–600k ohms), or Dry Contact Binary Input (see Input and Output wiring guidelines)
12	End-of-Line (EOL) Switch (see Setting the End-of-Line (EOL) switch)
13	LED Status Indicators (see Table 8)
14	FC Bus Port (RJ-12 6-pin Modular Jack)

Mounting

Observe the following guidelines when mounting a controller:

- Ensure the mounting surface can support the controller, DIN rail, and any user-supplied enclosure.
- Mount the controller horizontally on 35 mm DIN rail whenever possible.
- Mount the controller in the correct mounting position (Figure 2).
- Whenever possible in wall-mount applications, mount the controller on a hard, even surface.
- Use shims or washers to mount the controller securely and evenly on the mounting surface.
- Mount the controller in an area free of corrosive vapors and observe the ambient conditions requirements in Technical specifications.
- Provide sufficient space around the controller for cable and wire connections, easy cover removal, and good ventilation through the controller (50 mm [2 in.] minimum on the top, bottom, and front of the controller).
- Do not mount the controller on surfaces prone to vibration, such as ductwork.
- Do not mount the controller in areas where electromagnetic emissions from other devices or wiring can interfere with controller communication.

Observe these additional guidelines when mounting a controller in a panel or enclosure:

- Mount the controller so that the enclosure walls do not obstruct cover removal or ventilation through the controller.
- Mount the controller so that the power transformer and other devices do not radiate excessive heat to the controller.
- Do not install the controller in an airtight enclosure.

Figure 2: Controller Mounting Positions

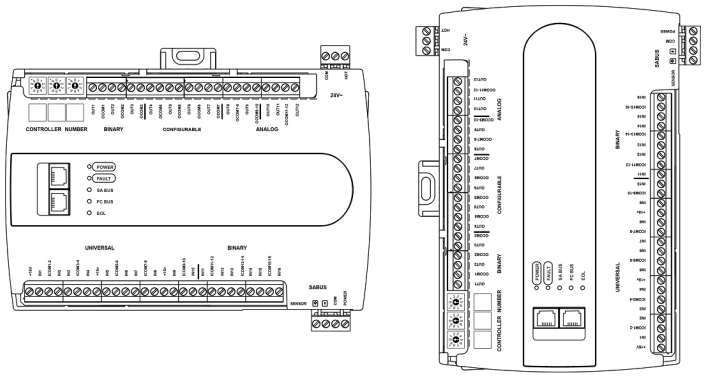

Horizontal Mount Position
Preferred for Wall Mounting
Required for DIN Rail Mounting

Vertical Mount Position
Acceptable for Wall Mounting

Mounting Features and Dimensions

See Figure 3 for mounting dimensions in millimeters and inches. Inches are listed in parenthesis. Figure 3 also illustrates the DIN rail channel and the mounting clips in an extended position.

Figure 3: Back of Controller

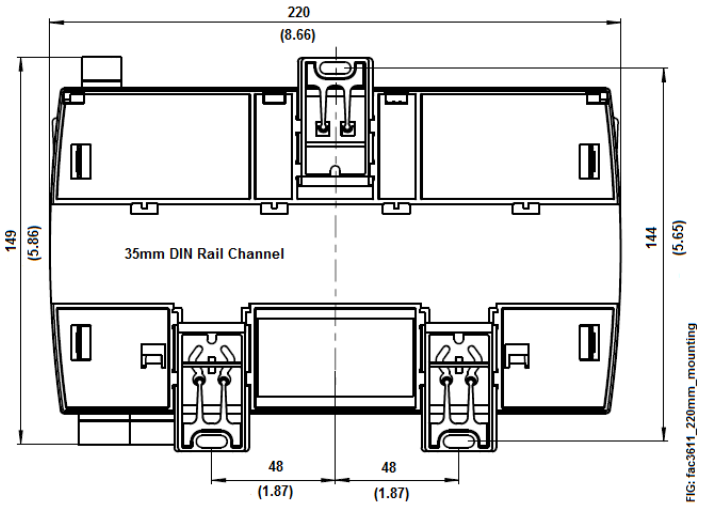

DIN rail mount applications

Mounting the controller horizontally on 35 mm DIN rail is the preferred mounting method.

To mount a controller on 35 mm DIN rail, complete the following steps:

1. Securely mount a 23 cm (9.125 in.) or longer section of 35 mm DIN rail, horizontally and centered in the selected space, so that the controller mounts in the position shown in Figure 2.
2. Pull the two bottom mounting clips outward from the controller to the extended position.
3. Hang the controller on the DIN rail by the hooks at the top of the (DIN rail) channel on the back of the controller, and position the controller snugly against the DIN rail.
4. Push the bottom mounting clips inward (up) to secure the controller on the DIN rail.

   To remove the controller from the DIN rail, pull the bottom mounting clips out to the extended position and carefully lift the controller off the DIN rail.

Wall mount applications

To mount a controller directly on a wall or other flat vertical surface, complete the following steps:

1. Pull the two bottom mounting clips outward and ensure they are locked in the extended position.
2. Mark the mounting hole locations on the wall in either the horizontal or vertical mounting position. Or hold the controller up to the wall or surface in a proper mount position and mark the hole locations through the mounting clips.
3. Drill holes in the wall or surface at the marked locations and insert appropriate wall anchors in the holes (if necessary).
4. Hold the controller in place and insert the screws through the mounting clips and into the holes (or anchors). Carefully tighten all of the screws.

   Important: Do not overtighten the mounting screws. Overtightening the screws may damage the mounting clips.

Wiring

CAUTION

Risk of Electric Shock:

Disconnect the power supply before making electrical connections to avoid electric shock

ATTENTION

Mise En Garde: Risque de décharge électrique

Débrancher l'alimentation avant de réaliser tout raccordement électrique afin d'éviter tout risque de décharge électrique.

CAUTION

Risk of Property Damage:

Do not apply power to the system before checking all wiring connections. Short circuited or improperly connected wires may result in permanent damage to the equipment.

ATTENTION

Mise En Garde: Risque de dégâts matériels

Ne pas mettre le système sous tension avant d'avoir vérifié tous les raccords de câblage. Des fils formant un court-circuit ou connectés de façon incorrecte risquent d'endommager irrémédiablement l'équipement.

Important: Do not exceed the controller electrical ratings. Exceeding controller electrical ratings can result in permanent damage to the controller and void any warranty.

Important: Use copper conductors only. Make all wiring in accordance with local, national, and regional regulations.

Important: Electrostatic discharge can damage controller components. Use proper electrostatic discharge precautions during installation, setup, and servicing to avoid damaging the controller.

For detailed information about configuring and wiring an SA bus or MS/TP FC bus, refer to the following documents depending on your system (FX or BCPro): *MS/TP Communications Bus for the BCPro™ System Technical Bulletin (LIT-12011908)* or *FX-PC Series Controllers MS/TP Communications Bus Technical Bulletin (LIT-12011670).* For detailed information on wiring an N2 network, refer to the *N2 Communications Bus Technical Bulletin (LIT-636018).*

Terminal blocks and bus ports

Input and Output terminal blocks

The fixed input terminal blocks are located on the bottom of the controller, and the output terminal blocks are located on the top of the controller.

FC Bus terminal block

The FC Bus terminal block is a blue, removable, 4-terminal plug that fits into a board-mounted jack.

Wire the removable FC Bus terminal block plugs on the controller, and other controllers in a daisy-chain configuration using 3-wire twisted, shielded cable as shown in Figure 4. For more information about the FC Bus terminal function, requirements, and ratings, see Communications bus and supply power terminal block .

Figure 4: FC bus terminal block wiring

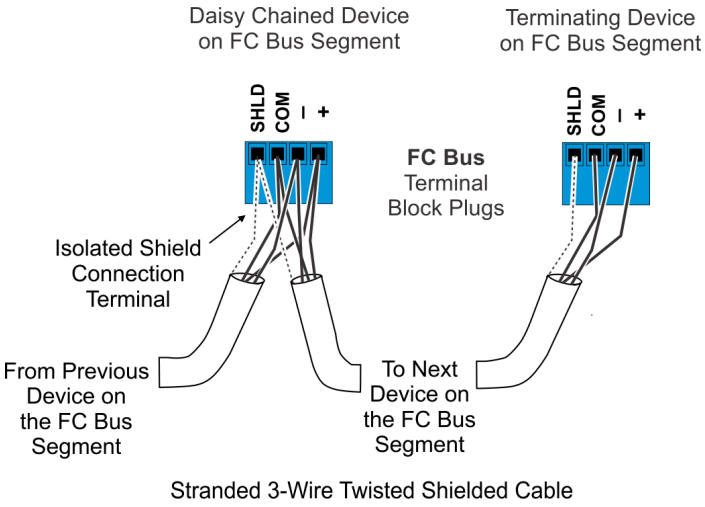

Note: The FC bus Shield (SHLD) terminal is isolated and can be used to connect (daisy chain) the shields for FC bus wiring.

SA Bus terminal block

The SA Bus terminal block is a brown, removable, 4-terminal plug that fits into a board-mounted jack.

Wire the removable SA Bus terminal block plugs on the controller, and other SA Bus devices in a daisy-chain configuration using 4-wire twisted, shielded cable as shown in Figure 5.

Figure 5: SA Bus terminal block wiring

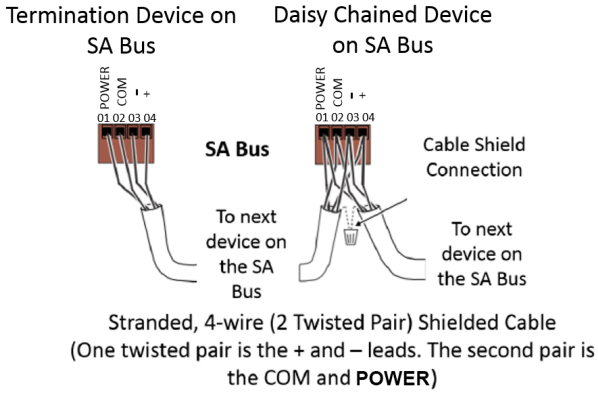

Note: The SA PWR terminal supplies 15 VDC. The SA PWR terminal can be used to connect (daisy chain) the 15 VDC power leads on the SA bus.

FC Bus port

The FC bus port on the front of the controller is an RJ-12, 6-position modular jack that provides a connection for the CWCVT or the ZFR/ZFR Pro Wireless Field Bus Router.

The FC bus port is connected internally to the FC bus terminal block. For more information about the FC Bus port functions, requirements, and ratings, see Communications bus and supply power terminal block . The FC bus port pin assignment is shown in Figure 6.

Figure 6: Pin number assignments for sensor, SA bus, and FC bus ports on Controllers

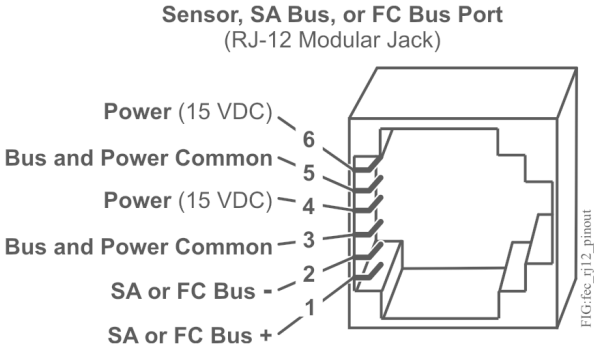

SA Bus port

The Sensor (SA Bus) port on the bottom of the controller is an RJ-12, 6-position modular jack that provides a connection for the CWCVT, the VAV Balancing Tool, specified network sensors, or other SA Bus devices with RJ-12 plugs. When the PCA is configured for N2 network communication, you must download and commission the controller using the SA Bus port.

The Sensor port is connected internally to the SA bus terminal block. For more information about the Sensor port functions, requirements and ratings, see Communications bus and supply power terminal block . The Sensor Port pin assignment is shown in Figure 6 .

Supply power terminal block

The 24 VAC supply power terminal block is a gray, removable, 3-terminal plug that fits into a board-mounted jack on the top right of the controller.

Wire the 24 VAC supply power wires from the transformer to the HOT and COM terminals on the terminal plug as shown in Figure 7. Do not use the middle terminal on the supply power terminal block.

Figure 7: 24 VAC supply power terminal block wiring

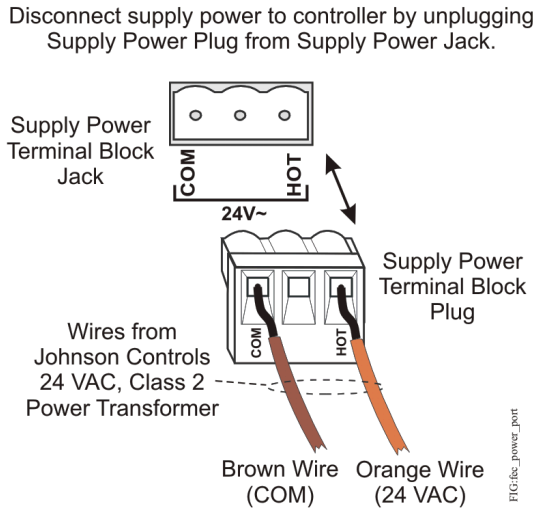

Note: The supply power wire colors may be different on transformers from other manufacturers. Refer to the transformer manufacturer's instructions and the project installation drawings for wiring details.

Important: Connect 24 VAC supply power to the controller and all other network devices so that transformer phasing is uniform across the network devices. Powering network devices with uniform 24 VAC supply power phasing reduces noise, interference, and ground loop problems. The controller does not require an earth ground connection.

Terminal wiring guidelines, functions, ratings, and requirements

Input and Output wiring guidelines

Table 2 provides information and guidelines about the functions, ratings, and requirements for the controller input and output terminals. The table also references guidelines for determining proper wire sizes and cable lengths.

In addition to the wiring guidelines in Table 2, observe these guidelines when you wire controller inputs and outputs:

- Run all low-voltage wiring and cables separate from high-voltage wiring.
- All input and output cables, regardless of wire size or number of wires, should consist of stranded, insulated, and twisted copper wires.
- Shielded cable is not required for input or output cables.
- Shielded cable is recommended for input and output cables that are exposed to high electromagnetic or radio frequency noise.
- Inputs/outputs with cables less than 30 m (100 ft) typically do not require an offset in the software setup. Cable runs over 30 m (100 ft) may require an offset in the input/output software setup.

I/O Terminal blocks, ratings, and requirements

Table 2: Terminal blocks, functions, ratings, requirements, and cables

Terminal block label	Terminal label	Function, ratings, requirements	Determine wire size and maximum cable length
UNIVERSAL (Inputs)	**+15 V**	**15 VDC Power Source** for active (3-wire) input devices connected to the Universal IN*n* terminals. Provides 100 mA total current	Same as (Universal) **IN***n* ⓘ **Note:** Use 3-wire cable for devices that source power from the +15V terminal.
	IN*n*	**Analog Input - Voltage Mode (0–10 VDC)** 10 VDC maximum input voltage Internal 75k ohms pull-down	See Guideline **A** in Table 3.
		Analog Input - Current Mode (4–20 mA) Internal 100 ohms load impedance. See Setting the input jumpers. ⓘ **Note:** A current loop jumper must be in the Enabled position to maintain a closed 4-20 mA current loop. See UI current loop jumpers.	See Guideline **B** in Table 3.
		Analog Input - Resistive Mode (60–600k ohms) Internal 12 V. 15k ohms pull-up Qualified Sensors: 0–2k ohms potentiometer, RTD (1k Nickel [Johnson Controls® sensor], 1k Platinum, and A99B Silicon Temperature Sensor) Negative Temperature Coefficient (NTC) Sensor	See Guideline **A** in Table 3.
		Binary Input - Dry Contact Maintained Mode 1 second minimum pulse width Internal 12 V. 15k ohms pull-up	See Guideline **A** in Table 3.
	ICOM*n*	**Universal Input Common** for all Universal Input terminals ⓘ **Note:** All Universal ICOM*n* terminals share a common, which is isolated from all other commons, except the SA bus common. One common screw terminal point is provided for every two input screw terminal points.	Same as (Universal) **IN***n*
BINARY (Inputs)	**IN***n*	**Binary Input - Dry Contact Maintained Mode** 0.01 second minimum pulse width Internal 18 V. 3k ohms pull-up	See Guideline **A** in Table 3.
		Binary Input - Pulse Counter/Accumulator Mode 0.01 second minimum pulse width (50 Hz at 50% duty cycle) Internal 18 V. 3k ohms pull-up	
	ICOM*n*	**Binary Input Common** for all Binary Input (IN) terminals ⓘ **Note:** All Binary ICOM*n* terminals share a common, which is isolated from all other commons.	

Table 2: Terminal blocks, functions, ratings, requirements, and cables

Terminal block label	Terminal label	Function, ratings, requirements	Determine wire size and maximum cable length
ANALOG (Outputs)	**OUT***n*	**Analog Output - Voltage Mode (0–10 VDC)** 10 VDC maximum output voltage 10 mA maximum output current Required an external load of 1,000 ohms or more. ⓘ **Note:** The Analog Output (AO) operates in the Voltage Mode when connected to devices with impedances greater than 1,000 ohms. Devices that drop below 1,000 ohm may not operate as intended for Voltage Mode applications.	See Guideline **C** in Table 3.
		Analog Output - Current Mode (4–20 mA) Requires an external load between 0 and 300 ohms. ⓘ **Note:** The Analog Output (AO) operates in the Current Mode when connected to devices with impedances less than 300 ohms. Devices that exceed below 300 ohms may not operate as intended for Current Mode applications.	
	OCOM*n*	**Analog Output Signal Common** for all Analog OUT terminals. ⓘ **Note:** All Analog Output Common terminals (OCOM*n*) share a common, which is isolated from all other commons. One common screw terminal point is provided for every two output screw terminal points.	
BINARY (Output)	**OUT***n*	**Binary Output - 24 VAC Triac** Class 2, 24 V, 500 mA (External Power Source) Connects OUT*n* to OCOM*n* when activated. External Power Source Requirements: 30 VAC maximum output voltage 0.5 A maximum output current 1.3 A at 25% duty cycle 40 mA minimum load current	See Guideline **C** in Table 3.
	OCOM*n*	**Binary Output Common** (for OUT*n* terminal) ⓘ **Note:** Each Binary Output Common terminal (OCOM*n*) is isolated from **all** other commons, including other Binary Output Common terminals.	

Cable and wire length guidelines

The following table defines cable length guidelines for the various wire sizes that may be used for wiring low-voltage (<30 V) input and outputs.

ⓘ **Note:** The required wire sizes and lengths for high-voltage (>30 V) Relay Outputs are determined by the load connected to the relay, and local, national, or regional electrical codes.

Table 3: Cable length guidelines for recommended wire sizes for low-voltage (<30 V) Inputs and Outputs

	Wire size/Gauge and type	Maximum cable length and type	Assumptions
A	1.0 mm (18 AWG) stranded copper	457 m (1,500 ft) twisted wire	100 mV maximum voltage drop Depending on cable and the connected input or output device, you may have to define an offset in the setup software for the input or output point.
	0.8 mm (20 AWG) stranded copper	297 m (975 ft) twisted wire	
	0.6 mm (22 AWG) stranded copper	183 m (600 ft) twisted wire	
	0.5 mm (24 AWG) stranded copper	107 m (350 ft) twisted wire	

Table 3: Cable length guidelines for recommended wire sizes for low-voltage (<30 V) Inputs and Outputs

	Wire size/Gauge and type	Maximum cable length and type	Assumptions
B	1.0 mm (18 AWG) stranded copper	229 m (750 ft) twisted wire	100 mV maximum voltage drop Depending on cable and the connected input or output device, you may have to define an offset in the setup software for the input or output point.
	0.8 mm (20 AWG) stranded copper	137 m (450 ft) twisted wire	
	0.6 mm (22 AWG) stranded copper	91 m (300 ft) twisted wire	
	0.5 mm (24 AWG) stranded copper	61 m (200 ft) twisted wire	
C	See Figure 8 to select wire size/gauge. Use stranded copper wire	See Figure 8 to determine cable length. Use twisted wire cable.	N/A

Maximum cable length versus load current

Use Figure 8 to estimate the maximum cable length relative to the wire size and the load current (in mA) when wiring inputs and outputs.

Note: Figure 8 applies to low-voltage (<30 V) inputs and outputs only.

Figure 8: Maximum wire length for low-voltage (<30 V) Inputs and Outputs by current and wire size

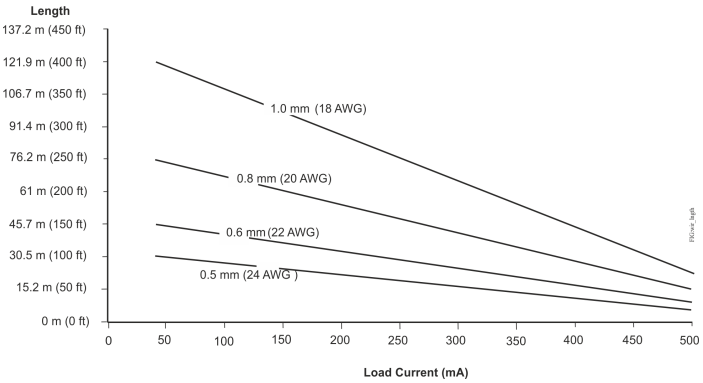

Communications bus and supply power wiring guidelines

Communications Bus and supply power terminal blocks, ratings, and requirements provides information about the functions, ratings, and requirements for the communication bus and supply power terminals. The table also provides guidelines for wire sizes, cable types, and cable lengths for when you wire the controller's communication buses and supply power.

In addition, observe these guidelines when you wire an SA or FC bus and the 24 VAC supply power:

- Run all low-voltage wiring and cables separate from high-voltage wiring.
- All SA and FC bus cables, regardless of wire size, should be twisted, insulated, stranded copper wire.
- Shielded cable is strongly recommended for all SA and FC bus cables.
- Refer to the following documents depending on your system (FX or BCPro): *MS/TP Communications Bus for the BCPro™ System Technical Bulletin (LIT-12011908)* or *FX-PC Series Controllers MS/TP Communications Bus Technical Bulletin (LIT-12011670)* for detailed information regarding wire size and cable length requirements for SA and FC buses.

Communications bus and supply power terminal block

Note: The SA Bus and FC Bus wiring recommendations in this table are for MS/TP bus communications at 38.4k baud. For more information, refer to the following documents depending on your system (FX or BCPro): *MS/TP Communications Bus for the BCPro System Technical Bulletin (LIT-12011908)* or *FX-PC Series Controllers MS/TP Communications Bus Technical Bulletin (LIT-12011670)*.

Table 4: Communications bus and supply power terminal blocks, functions, ratings, requirements, and cables

Terminal block/ Port label	Terminal labels	Function, electrical ratings/Requirements	Recommended cable type
FC BUS	**+** **-**	FC Bus Communications	0.6 mm (22 AWG) stranded, 3-wire twisted, shielded cable recommended
	COM	Signal Reference (Common) for Bus communications	
	SHLD	Isolated terminal (optional shield drain connection)	
FC BUS (Port)		RJ-12 6-Position Modular Connector provides: FC Bus Communications FC Bus Signal Reference and 15 VDC Common 15 VDC, 180 mA, Power for Bluetooth Commissioning Converter	Bluetooth Commissioning Converter retractable cable or 24 AWG 3-pair CAT 3 cable or above.

Table 4: Communications bus and supply power terminal blocks, functions, ratings, requirements, and cables

Terminal block/ Port label	Terminal labels	Function, electrical ratings/Requirements	Recommended cable type
SA BUS	**+** **-**	SA Bus Communications	0.6 mm (22 AWG) stranded, 4-wire (2 twisted-pairs), shielded cable recommended. ⓘ **Note:** The + and - wire are one twisted pair, and the COM and SA PWR are the second twisted pair of wires.
	COM	SA Bus Signal Reference and 15 VDC Common	
	SA PWR	15 VDC Supply Power for Devices on the SA Bus (Maximum total current draw for SA Bus is 240 mA.)	
Sensor (Port)	**SENSOR**	RJ-12 6-Position Modular Connector provides: SA Bus Communications SA Bus Signal Reference and 15 VDC Common 15 VDC Power for devices on the SA bus and Bluetooth Commissioning Converter	24 AWG 3-pair CAT3 cable <30.5 m (100 ft)
24~	**HOT**	**24 VAC Power Supply - Hot** Supply 20–30 VAC (Nominal 24 VAC)	0.8 mm to 1.0 mm (18 AWG) 2-wire
	COM	**24 VAC Power Supply Common** (Isolated from all other Common terminals on controller) 14 VA	

Termination diagrams

A set of Johnson Controls termination diagrams provides details for wiring inputs and outputs to the controllers. See the figures in Table 6 in this section for the applicable termination diagrams.

Table 5: Termination details

Type of field device	Type of Input/ Output	Termination diagrams
Temperature Sensor	UI	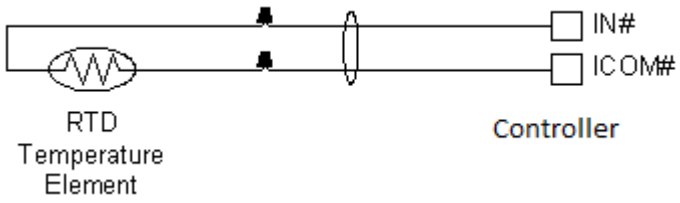
Voltage Input - External Source	UI	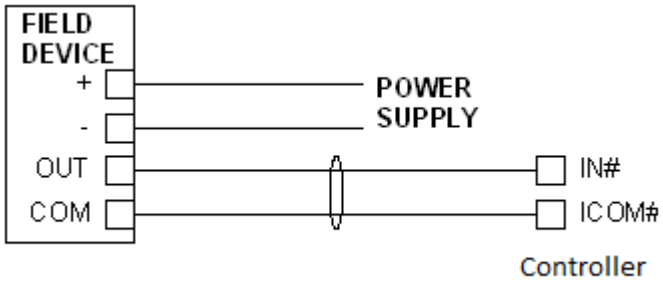
Voltage Input - Internal Source	UI	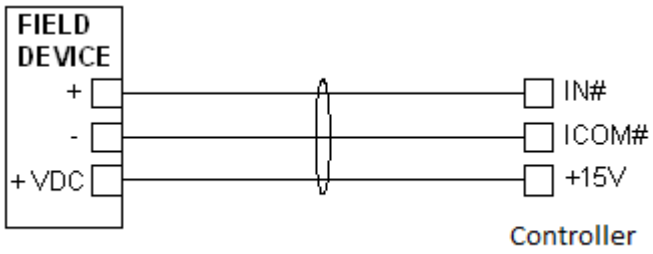
Voltage Input (Self-Powered)	UI	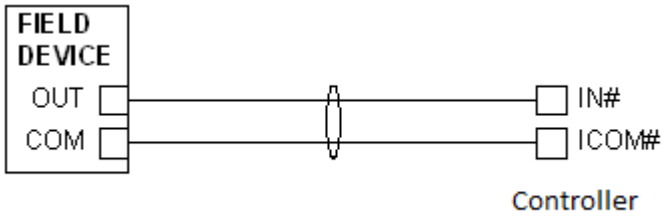
Current Input - External Source (Isolated)	UI	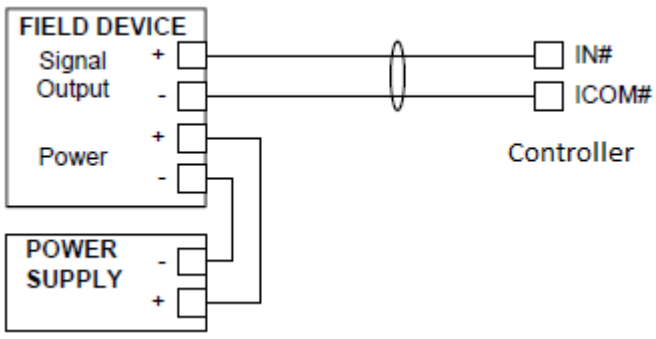

Table 5: Termination details

Type of field device	Type of Input/ Output	Termination diagrams
Current Input - Internal Source (2-wire)	UI	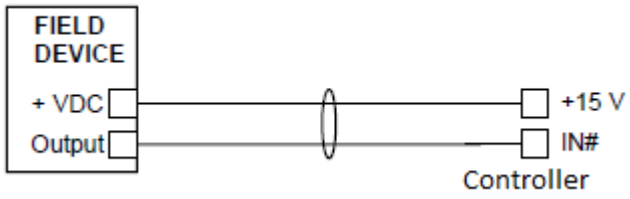
Current Input - Internal Source (3 wire)	UI	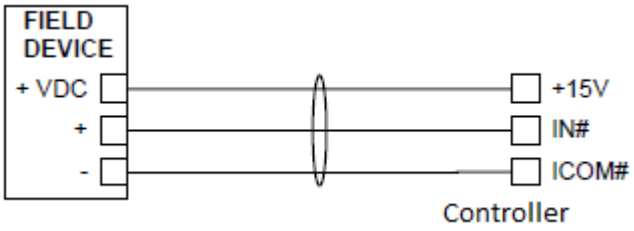
Current Input - External Source (in Loop)	UI	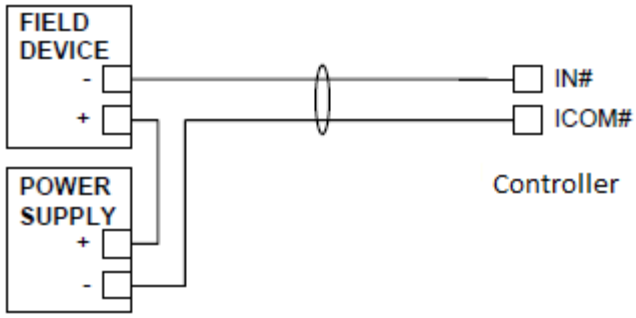
Feedback from EPP-1000	UI	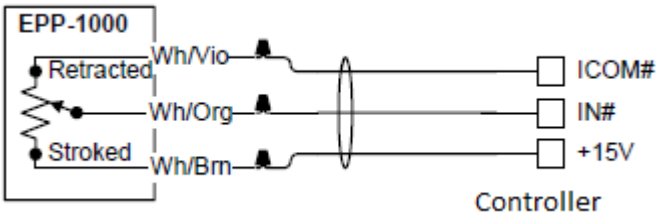
Dry Contact (Binary Input)	UI or BI	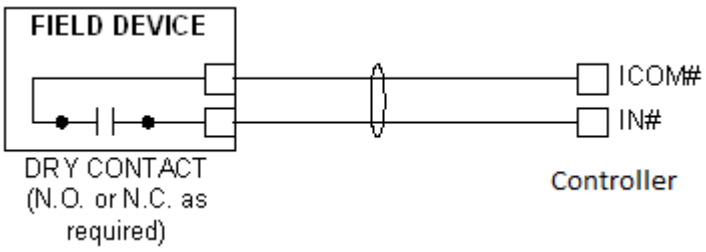

Table 5: Termination details

Type of field device	Type of Input/ Output	Termination diagrams
0–10 VDC Output to Actuator (External Source)	CO or AO	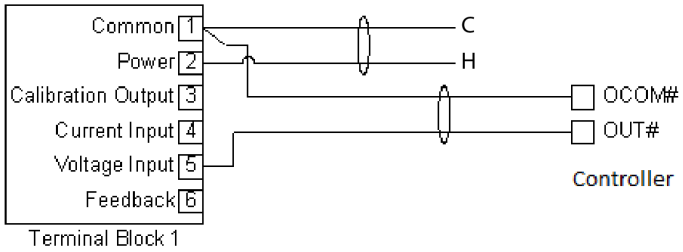
0–10 VDC Output to Actuator (Internal Source)	CO or AO	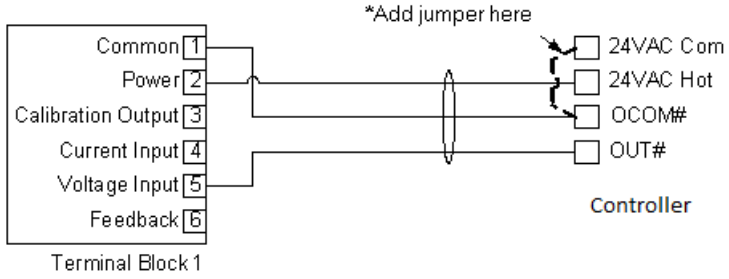
Current Output	CO or AO	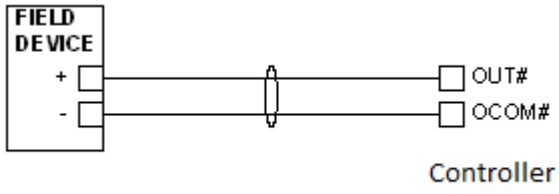
24 VAC Triac Output (Switch Low, External Source)	CO or AO	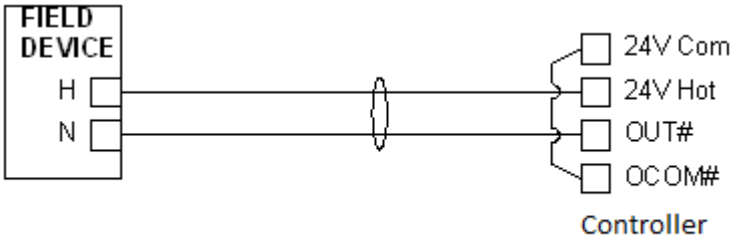
Analog Output (Current)	AO	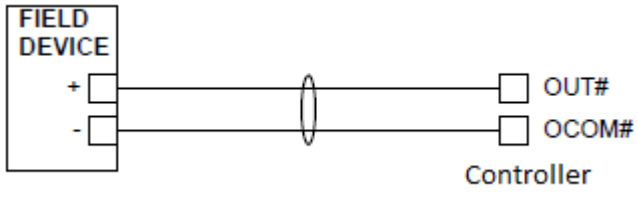

Table 5: Termination details

Type of field device	Type of Input/ Output	Termination diagrams
4–20 mA Output to Actuator	AO	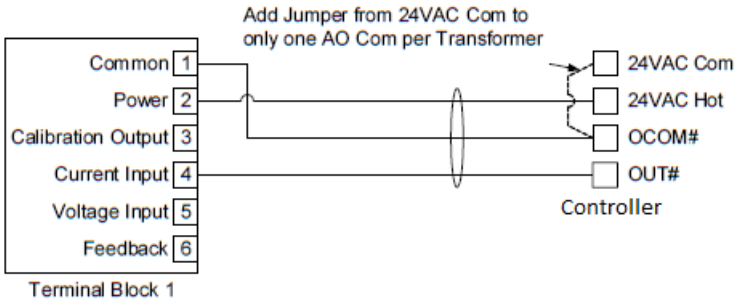
4–20 mA Output to Actuator	AO	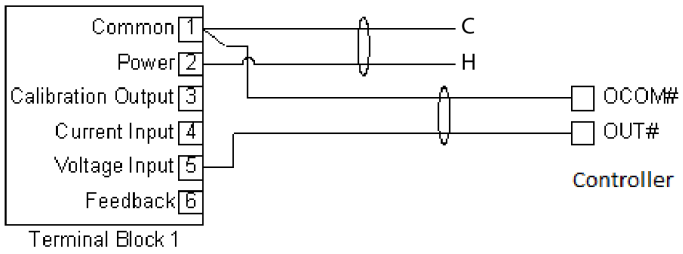
Incremental Control to Actuator (Switch Low, Externally Sourced)	BO	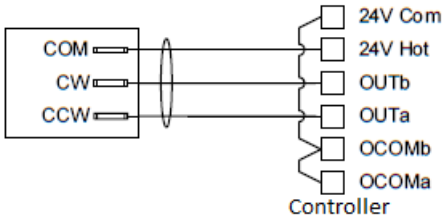
24 VAC Binary Output (Switch Low, Externally Sourced)	BO	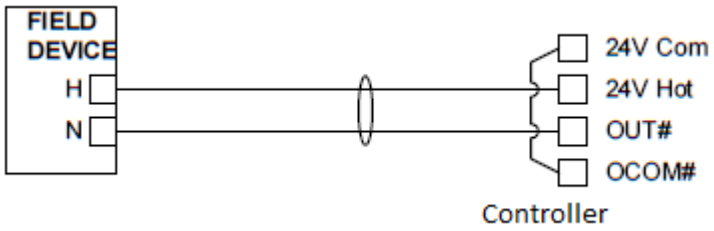
24 VAC Binary Output (Switch High, Externally Sourced)	BO	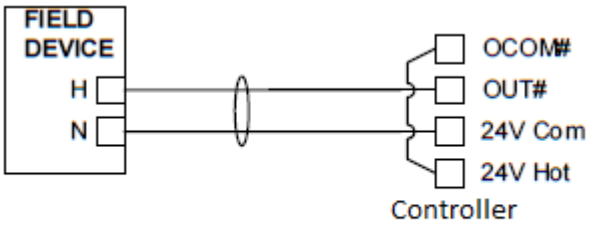

Table 5: Termination details

Type of field device	Type of Input/ Output	Termination diagrams
Incremental Control to Actuator (Switch High, Externally Sourced)	BO	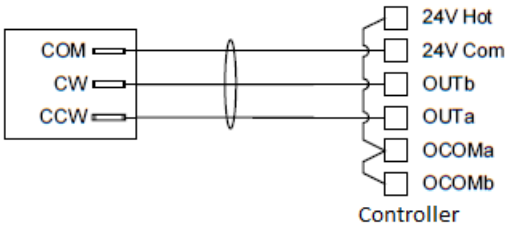 **Note:** The above diagram is for the NS7000 series thermostats.
Network Stat with Phone Jack (Fixed Address = 199)	SA Bus	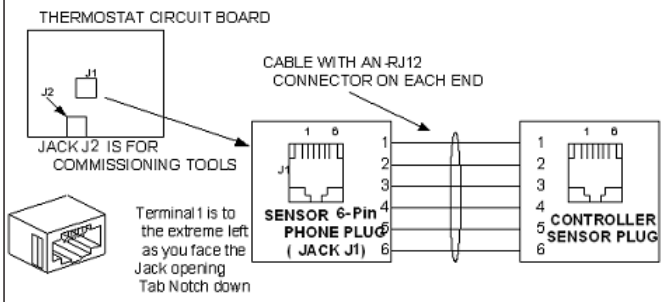 **Note:** The above diagram is for the NS7000 series thermostats.
Network Stat with Terminals Addressable	SA Bus	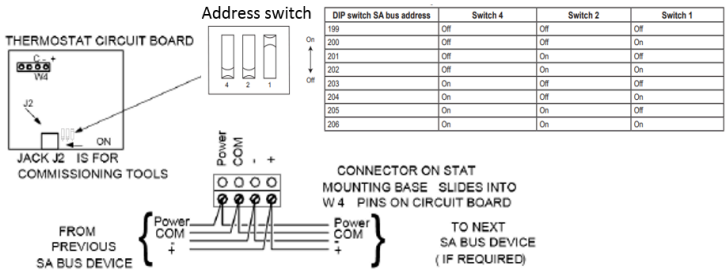 DIP switch SA bus address / Switch 4 / Switch 2 / Switch 1 199 Off Off Off 200 Off Off On 201 Off On Off 202 Off On On 203 On Off Off 204 On Off On 205 On On Off 206 On On On
Network Stat with Terminals (Fixed Address = 199)	SA Bus	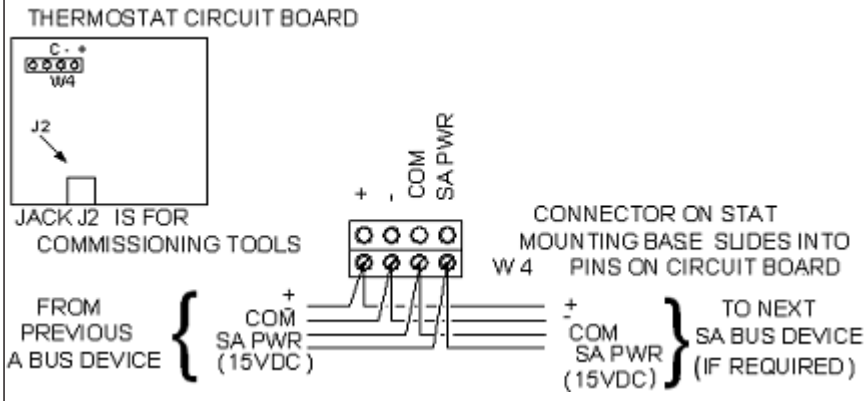 **Note:** The above diagram is for the NS7000 series thermostats.

Setup and Adjustments

Configuring N2 Communications

N2-capable controllers support the full range of possible N2 device addresses provided by the N2 protocol standard (1-254).

To configure a controller to communicate using the N2 protocol, complete the following steps:

1. Disconnect the 24 VAC supply from the controller.
2. Set the address switches to the desired N2 address. For details about setting a device address, see Setting the device address.
3. Reconnect the 24 VAC supply to the controller.
4. Using an SA bus connection, download the firmware and controller application file configured for N2 to the controller.

Switching the Communications Protocol from N2 to MS/TP

For N2 sites that are converting to BACnet MS/TP, you can switch the communications protocol of N2-configured MS/TP controllers back to BACnet MS/TP.

To switch the controller operating in N2 mode back into BACnet MS/TP mode, complete the following steps:

1. Disconnect the 24 VAC supply from the controller.
2. Set the address switches to the desired BACnet MS/TP address. For details about setting a device address, see Setting the device address.
3. Ensure the DIP switch 128 is set to OFF.
4. Reconnect the 24 VAC supply to the controller.
5. Using an SA Bus connection, download a controller application file configured for BACnet MS/TP to the controller.

Configuring Wireless Communications

To configure a controller for use with the ZFR/ZFR Pro Series Wireless Field Bus system, complete the following steps:

1. Disconnect the 24 VAC supply from the controller.
2. Wire the input/output terminals and SA bus.

   Note: In wireless network applications, do not connect any wires to the FC bus terminal block. (Connect the SA/FC terminal block on an PCX to an SA bus only.)
3. **Important:** Before the controller is powered on, connect the FX-ZFR/ZFR Pro Wireless Field Bus Router to the FC bus port (RJ-12 modular jack) on the front of the controller.
4. Ensure that the controller's device address DIP switches are set to the correct device address. For details about setting a device address, see Setting the device address.
5. Reconnect the 24 VAC supply to the controller.

Setting the device address

Controllers are master devices on an MS/TP (SA or FC) bus. Before you operate a controllers on a bus, you **must** set a valid and unique device address for each controller on the bus. You set the device address by setting the positions of the switches on the DIP switch block at the top of the controller(). Device addresses 4 through 127 are the valid addresses for these controllers on an MS/TP FC Bus.

Device Address	Use on Description
0 (Switch 128 Off)	Reserved for FC Bus Supervisory Controller(not for use on field controllers).
1-3 (Switch 128 Off)	Reserved for peripheral devices (not for use on field controllers).
4 to 127 (Switch 128 Off)	Used for MSTP master devices (field controllers) that are hardwired to an SA bus or FC bus.

The DIP switch block has eight switches numbered 128, 64, 32, 16, 8, 4, 2, and 1. Switches 64 through 1 are device address switches. Switch 128 must be set to **OFF** for all hard-wired SA and FC bus applications.

Figure 9: Device address DIP switch block set to address 21

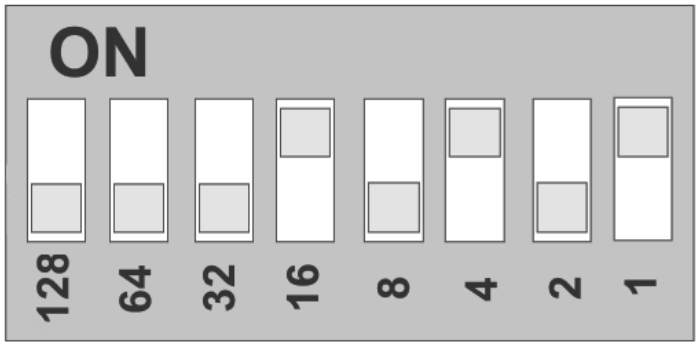

Note: Controllers ship with switch 128 ON and the remainining adress switches off rendering the controllers wired subordinate devices, which do not operate on MS/TP buses, but do not interfere with bus operation. Set a valid and unique device address on the controller before applying power to the controller on the bus.

To set the device addresses on the controllers, complete the following steps:

1. Set **all** of the switches on the address DIP switch block (128 through 1) to OFF.

2. Set one or more of the seven address switches (64 though 1) to ON, so that the sum of the switch numbers set to ON equals the intended device address. Set the highest number switch that is less than or equal to the intended device address to ON. Then continue setting lower numbered switches until the total equals the intended address. For example, if the intended device address is 21, set switch 16 to ON first, then set switch 4 ON, followed by switch 1 (16+4+1= 21). See Figure 9.
3. Set a unique and sequential device address for each of the controllers connected on the SA or FC bus starting with device address 4. To ensure the best bus performance, set sequential device addresses with no gaps in the device address range (4, 5, 6, 7, 8, 9, and so on). The controllers do not need to be physically connected on the bus in their numerical device address order.
4. Write each controller's device address on the white label below the DIP switch block on the controller's cover.

Removing the controller cover

Important: Electrostatic discharge can damage controller components. Use proper electrostatic discharge precautions during installation, setup, and servicing to avoid damaging the controller.

Important: Disconnect all power sources to the controller before you remove the cover and change the position of any jumper on the controller. Failure to disconnect power before changing a jumper can result in damage to the controller and void any warranties.

The controller cover is held in place by four plastic latches that extend from the base and snap into slots on the inside of the housing cover.

To remove the controller cover, complete the following steps:

1. Place your fingertips under the two cover lift tabs on the sides of the housing cover and gently pry the top of the cover away from the base to release the cover from the two upper latches.
2. Pivot the top of the cover further to release it from the lower two latches.
3. Replace the cover by placing it squarely over the base, and then gently and evenly push the cover on to the latches until they snap into the latched position.

Figure 10: Cover removed showing jumper positions

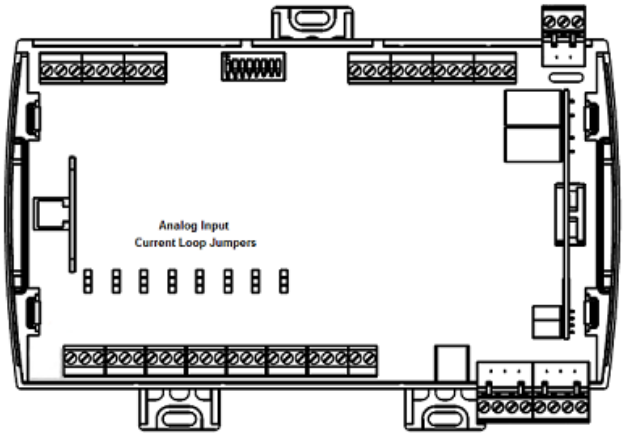

Setting the End-of-Line (EOL) switch

Each controller has an EOL switch, which, when set to ON, sets the controller as a terminating device on the bus. The default EOL switch position is OFF.

Figure 11: End-of-Line switch positions



To set the EOL switch, complete the following steps:

1. Determine the physical location of the controller on the FC bus.
2. Determine if the controller must be set as a terminating device on the bus.

   Note: For detailed information regarding EOL termination rules and EOL switch settings on FC buses, refer to the following documents depending on your system (FX or BCPro): *MS/TP Communications Bus for the BCPro System Technical Bulletin (LIT-12011908)* or *FX-PC Series Controllers MS/TP Communications Bus Technical Bulletin (LIT-12011670)*.
3. If the controller is a terminating device on the FC bus, set the EOL switch to ON. If the controller is not a terminating device on the bus, set the EOL switch to Off.

   When a controller is connected to power with its EOL switch set to ON, the amber EOL LED on the controller cover is lit.

Setting the input jumpers

CAUTION

Risk of Electric Shock:

Disconnect supply power to the controller before attempting to adjust the UI current loop jumpers. Failure to disconnect the supply power may result in electric shock.

ATTENTION

Risque de décharge électrique

Débrancher l'alimentation de l'controller avant tout réglage du UI current loop jumpers. Le non-respect de cette précaution risque de provoquer une décharge électrique.

UI current loop jumpers

The UI current loop jumpers are located on the circuit board under the controller cover near the UI terminals. When a UI is defined in the system software as a 4-20 mA Analog Input, set the UI's current loop jumper to the Enabled position as in Figure 12.

Figure 12: Current loop jumper positions

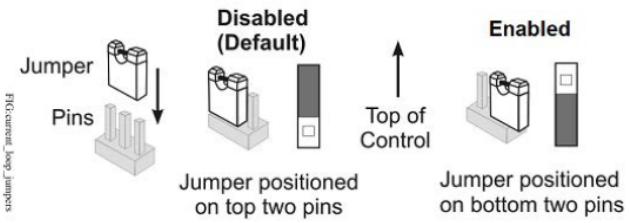

Setting the current loop jumper to the Enabled position connects an internal 100 ohms resistor across the UI terminals, which maintains the 4–20 mA current loop circuit even when power to the controller is interrupted or off.

- **Important:** Current loop jumpers must be in the Disabled (default) position for all UIs that are not set up to operate as 4–20 mA analog inputs.
- **Important:** A current loop jumper must be in the Enabled position to maintain a closed 4-20 mA current loop.

The following table identifies the current loop switches associated with each UI on the controller.

Table 6: UI Inputs and Jumper Labels

Universal Input Label	Jumper Label on Circuit Board
IN1	J5
IN2	J6
IN3	J7
IN4	J8
IN5	J9
IN6	J10
IN7	J11
IN8	J12

Setting up a local display

This PCA model does not have an integral display, but you can connect the controller to an F4-DLK0350 local controller display. If the display is configured with a local password, the equipment controller and display must be running compatible firmware versions. If the display is not configured with a local password, it is compatible with equipment controllers at any firmware revision. See the following table for further details:

Table 7: Equipment Controller and display compatibility for displays configured with a local password

Display model and firmware version	Controller running 10.x firmware or greater	Controller running 9.x firmware or earlier
DLK0350 running 10.x firmware or greater	Compatible	Not compatible
DLK0350 running 9.x firmware	Not compatible	Compatible
DIS1710 running 6.2 firmware	Not compatible	Compatible

For detailed information about setting up and operating a remotely connected DLK0350 display, refer to the *Local Controller Display User Guide (LIT-12013762)*.

Input/Output Wiring Validation

The PCA3613 controllers ship with a default state that can assist in validating the wiring of the input and output terminals prior to download of an application file. When the controller is powered on in this state, the Fault LED will flash in a pattern of two quick blinks and then a long pause (see Table 8).

To make use of this feature, ensure the DIP switches are set to the desired address and wire the input and output terminals. Apply power to the controller and connect to the device with either the CWCVT or FX-DLK0350 local controller display to view the points in the controller. The PCA3613 controller will report an Operational status even though

there is no true application loaded. CCT will not be able to commission or upload the device as a result until a true application is downloaded. The application name displayed will be the address of the controller followed by the model of the controller and “Default State”.

For example, a PCA3613 controller whose DIP switches are set to 8 would have the default state application name of “8-PCA3613 Default State”.

The default state creates I/O points for all connections on the input and output terminals. It assumes all Universal Inputs (UIs) are Nickel temperature sensors. The default state also takes input from a Network Sensor at address 199. If there is no connected Network Sensor, the startup of this default state will be delayed by 30 seconds as the controller attempts to establish connection with the sensor.

Commissioning the Controllers

You commission BACnet MS/TP controllers with the (Controller Configuration Tool) CCT software. The controller can be connected through the CWCVT. Refer to *Controller Tool Help (LIT-12011147)* for detailed information on commissioning field controllers.

Firmware package file

The FX-FCP-0 equipment controller firmware package files are required for CCT to configure and commission the controllers. The firmware package files also allow you to upgrade an existing XPM or PCX to the latest firmware release available for that expansion module.

Beginning at CCT Release 13, the firmware package files are orderable separately; they are not included with CCT.

For additional information about the firmware package files, refer to the *CCT Installation Instructions (LIT-12011259)*.

Resetting the controller

PCA controllers with 12.0 firmware or later can be reset to a factory default state. The factory reset deletes the custom application, all persisted data, configuration settings, and the controller verification file. The controller returns to the state it was in when it left the manufacturing facility. A reset can be useful in scenarios where the controller appears to be in an unrecoverable state, or when the device needs to be moved to a different location and the application data is no longer relevant.

To perform a reset on the PCA controller, you must enter a specific sequence of three numbers on the controller's DIP switches. After entering a number on the DIP switches, you have four seconds to enter the next number in the sequence. If more than four seconds pass, entering the remaining numbers will not initiate the reset and you must restart the process from the first number.

To reset the PCA controller:

1. Set all eight DIP switches to the **ON** position, for a value of 255. The FAULT and SA BUS LEDs quickly blink once.

Figure 13: DIP switch set to 255



2. Set the DIP switch labeled 64 to the OFF position, for a value of 191. The FAULT and SA BUS LEDs quickly blink once.

Figure 14: DIP switch set to 191



3. Keep switch 64 OFF, and set the DIP switch labeled 16 to OFF, for a value of 175.

Figure 15: DIP switch set to 175

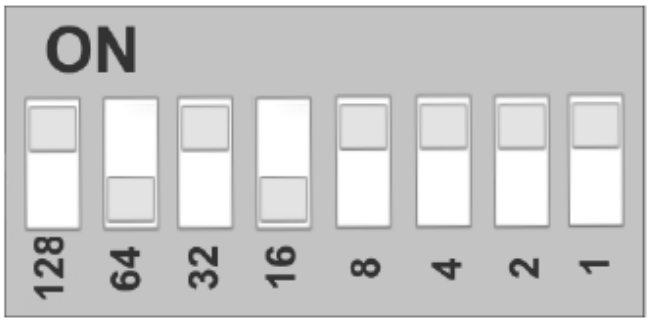

Note: If a device is configured or connected to the SA Bus of the controller, the SA Bus LED functions as normal and will not blink to indicate progress in the reset procedure. In this case, focus only on the Fault LED for the reset procedure.

When the reset starts, the FAULT LED, SA BUS LED, and FC BUS LED blink quickly at a rate of 5 Hz to indicate that the reset is in progress. The reset can take several minutes to complete. When the reset is complete, the controller restarts in its default state. For information on the default state of the controller, see Input/Output Wiring Validation.

Troubleshooting the controllers

Observe the Status LEDs on the front of the controller and see the following table to troubleshoot the controller.

LED status and states

Table 8: Status LEDs and description of LED states

LED label	LED color	Normal LED state	Description of LED states
POWER	Green	On Steady	Off Steady = No Supply Power or the controller's polyswitch/resettable fuse is open. Check Output wiring for short circuits and cycle power to controller. On Steady = Power Connected.
FAULT	Red	Off Steady	2 blinks followed by long pause = Controller powered on in default state. For more information about this default state, see Input/Output Wiring Validation. Off Steady = No Faults. On Steady = Device Fault; no application loaded; Main Code download required Blink - 2 Hz = Download or Startup in progress, not ready for normal operation. Rapid blink = SA Bus communications issue.
SA BUS	Green	Blink - 2 Hz	Blink - 2 Hz = Data Transmission (normal communication). Off Steady = No Data Transmission (N/A - auto baud not supported). On Steady = Communication lost, waiting to join communication ring.
FC BUS	Green	Blink - 2 Hz	Blink - 2 Hz = Data Transmission (normal communication). Off Steady = No Data Transmission (auto baud in progress). On Steady = Communication lost, waiting to join communication ring.
EOL	Amber	Off (Except on terminating devices)	On Steady = EOL switch in ON position. Off Steady = EOL switch in Off position.

Repair information

If the controller fails to operate within its specifications, replace the controller. For a replacement controller, contact your Johnson Controls representative.

Accessories ordering information

Table 9: Accessories ordering information

Product code number	Description
FX-PCX Series Expansion I/O Modules	Refer to the *FX-PC Series Programmable Controllers and Related Products Product Bulletin (LIT-12011657)* for a complete list of available devices.
XPM Series Expansion Modules	Refer to the *Facility Explorer CGx, CVx Equipment Controllers and XPM Expansion Modules Product Bulletin (LIT-12013225)* for a complete list of available XPM series expansion modules.
TL-CWCVT-0	Communications converter that provides a temporary wireless connection between a host device and equipment controllers that support the BACnet MS/TP protocol. Refer to the *CWCVT Wireless MS/TP Converter Catalog Page (LIT-1901198)* to identify the appropriate model for your region.
TL-CCT-0	Controller Configuration Tool (CCT) Software
FX-FCP-0	Equipment Controller Firmware Package Files for CCT
F4-DLK0350-0	Local Controller Display, 3.5-inch color display with navigation keypad
NS8000 Series Network Sensor	Refer to the *NS8000 Series Network Sensors Catalog Page* for specific sensor model descriptions.
TP-2420	Transformer, 120 VAC Primary to 24 VAC secondary, 20 VA, Wall Plug
Y65T31-0	Transformer, 120/208/240 VAC Primary to 24 VAC Secondary, 40 VA, Foot Mount, 8 in. Primary Leads and Secondary Screw Terminals, Class 2 ⓘ **Note:** Additional Y6x-x Series transformers are also available. Refer to the *Series Y63, Y64, Y65, Y66, and Y69 Transformers Product Bulletin (LIT-125755)*
AS-XFR050-0	for more information.Power transformer (Class 2, 24 VAC, 50 VA maximum output), no enclosure for more information.
AP-TBK4SA-0	Replacement SA Bus Terminal Blocks, 4-Position, Brown, Bulk Pack of 10

Table 9: Accessories ordering information

Product code number	Description
AP-TBK4FC-0	Replacement FC Bus Terminal Blocks, 4-Position, Blue, Bulk Pack of 10
AP-TBK3PW-0	Replacement Power Terminal Blocks, 3-Position, Gray, Bulk Pack of 10

Technical specifications

Table 10: PCA3613 Advanced Application Programmable Controller

Product Code Numbers	CH-PCA3613-0 Advanced Application Programmable Controller
Power Requirement	24 VAC (nominal, 20 VAC minimum/30 VAC maximum), 50/60 Hz, power supply Class 2 (North America), Safety Extra-Low Voltage (SELV) (Europe)
Power Consumption	14 VA maximum ⓘ **Note:** The VA rating does **not** include any power supplied to the peripheral devices connected to binary outputs (BOs) or configurable outputs (COs), which can consume up to 12 VA for each BO or CO; for a possible total consumption of an additional 72 VA (maximum).
Power Source	+15 VDC power source terminals provide 100 mA total current. Quantity 2 located in Universal IN terminals - for active (3-wire) input devices
Ambient Conditions	**Operating:** 0°C to 50°C (32°F to 122°F); 10% to 90% RH noncondensing **Storage:** -40°C to 80°C (-40°F to 176°F); 5% to 95% RH noncondensing
Controller Addressing for BACnet MS/TP	DIP switch set; valid controller device addresses 4–127 (Device addresses 0–3 and 128–255 are reserved and not valid controller addresses.)
Controller Addressing for N2	DIP switch set; valid control device addresses 1-254
Communications Bus	**Selectable N2 or BACnet® MS/TP, RS-485:** 3-wire FC Bus between the supervisory controller and other controllers 4-wire SA Bus between controller, network sensors and other sensor/actuator devices, includes a lead to source 15 VDC supply power (from controller) to bus devices.
Processor	RX631 32-Bit Renesas® microcontroller
Memory	16 MB flash memory and 8 MB RAM
Real-Time Clock Backup Power Supply	Super capacitor maintains power to the onboard real-time clock for a minimum of 72 hours when supply power to the controller is disconnected.
Input and Output Capabilities	**8 - Universal Inputs:** Defined as 0–10 VDC, 4–20 mA, 0–600k ohms, or Binary Dry Contact **6 - Binary Inputs:** Defined as Dry Contact Maintained or Pulse Counter/Accumulator Mode **6 - Binary Outputs:** Defined as 24 VAC Triac (external power source only) **6 - Analog Outputs:** Defined as 0–10 VDC or 4–20 mA
Analog Input/Analog Output Resolution and Accuracy	**Input:** 15-bit resolution **Output:** 15-bit resolution, +/- 200 mV accuracy in 0–10 VDC applications
Terminations	**Input/Output:** Fixed Screw Terminal Blocks **SA/FC Bus and Supply Power:** 4-Wire and 3-Wire Pluggable Screw Terminal Blocks **SA/FC Bus Port:** RJ-12 6-Pin Modular Jacks
Mounting	Horizontal on single 35 mm DIN rail mount (preferred), or screw mount on flat surface with three integral mounting clips on controller
Housing	**Enclosure material:** ABS and polycarbonate UL94 5VB; Self-extinguishing Protection Class: IP20 (IEC529)
Dimensions (Height x Width x Depth)	150 mm x 220 mm x 57.5 mm (5-7/8 in. x 8-3/4 in. x 2-3/8 in.) including terminals and mounting clips ⓘ **Note:** Mounting space requires an additional 50 mm (2 in.) space on top, bottom, and front face of controller for easy cover removal, ventilation, and wire terminations.
Weight	0.5 kg (1.1 lb)
Compliance	**United States:** UL Listed, File E107041, CCN PAZX, UL 916, Energy Management Equipment FCC Compliant to CFR47, Part 15, Subpart B, Class A

Table 10: PCA3613 Advanced Application Programmable Controller

	Canada: UL Listed, File E107041, CCN PAZX7 CAN/CSA C22.2 No. 205, Signal Equipment Industry Canada Compliant, ICES-003
CE	**Europe:** Johnson Controls declares that this product is in compliance with the essential requirements and other relevant provisions of the EMC Directive.
	Australia and New Zealand: RCM Mark, Australia/NZ Emissions Compliant
	BACnet International: BACnet Testing Laboratories™ (BTL) Protocol Revision 19 Listed and Certified BACnet Advanced Application Controller (B-AAC), based on the ANSI/ASHRAE 135-2020
UK CA	**United Kingdom:** Johnson Controls declares that this product is in compliance with Electromagnetic Compatibility Regulations, the Electrical Equipment (Safety) Regulations, and Restriction of the Use of Certain Hazardous Substances in Electrical and Electronic Equipment Regulations.

The performance specifications are nominal and conform to acceptable industry standard. For application at conditions beyond these specifications, consult the local Johnson Controls office. Johnson Controls shall not be liable for damages resulting from misapplication or misuse of its products.

Product warranty

This product is covered by a limited warranty, details of which can be found at www.johnsoncontrols.com/buildingswarranty.

Single point of contact

APAC	EU	UK	NA/SA
JOHNSON CONTROLS C/O CONTROLS PRODUCT MANAGEMENT NO. 32 CHANGJIANG RD NEW DISTRICT WUXI JIANGSU PROVINCE 214028 CHINA	JOHNSON CONTROLS VOLTAWEG 20 6101 XK ECHT THE NETHERLANDS	JOHNSON CONTROLS TYCO PARK GRIMSHAW LANE MANCHESTER M40 2WL UNITED KINGDOM	JOHNSON CONTROLS 5757 N GREEN BAY AVE. GLENDALE, WI 53209 USA

Contact information

Contact your local Johnson Controls representative:
www.johnsoncontrols.com/locations
Contact Johnson Controls: www.johnsoncontrols.com/contact-us

© 2026 Johnson Controls. All rights reserved. All specifications and other information shown were current as of document revision and are subject to change without notice.