FX-PCX47 Expansion Input/Output Module Installation Instructions

Application

The FX-PCX47 controller is part of the Facility Explorer® FX-PC Series Programmable Controller family. FX-PCX controllers expand the number of points connected to an FX-PCA, FX-PCG, or FX-PCV programmable controller or to a supervisory controller.

FX-PCX47 controllers operate on an RS-485 BACnet® MS/TP Bus as BACnet Application Specific Controllers (B-ASCs) and integrate into Johnson Controls® and third-party BACnet systems.

ⓘ **Note:** At CCT Release 10.1 and later, a new capability was introduced allowing FX-PCVs, FX-PCGs, and FX-PCAs to communicate by using either the BACnet or the N2 field bus networking protocol. The I/O can be connected through the SA bus to a host controller that is using either the BACnet or the N2 protocol. Only the BACnet protocol is supported when the I/O is connected directly to the trunk using the FC bus.

North American Emissions Compliance

Canada

This Class (A) digital apparatus meets all the requirements of the Canadian Interference-Causing Equipment Regulations.
Cet appareil numérique de la Classe (A) respecte toutes les exigences du Règlement sur le matériel brouilleur du Canada.

United States

This equipment has been tested and found to comply with the limits for a Class A digital device pursuant to Part 15 of the FCC Rules. These limits are designed to provide reasonable protection against harmful interference when this equipment is operated in a commercial environment. This equipment generates, uses, and can radiate radio frequency energy and, if not installed and used in accordance with the instruction manual, may cause harmful interference to radio communications. Operation of this equipment in a residential area may cause harmful interference, in which case the users will be required to correct the interference at their own expense.

Installation

Observe these guidelines when installing a controller:

- Transport the controller in the original container to minimize vibration and shock damage.
- Verify that all parts shipped with the controller.
- Do not drop the controller or subject it to physical shock.

Part No. 24-10144-122 Rev. F

2019-03-22

(barcode for factory use only)

FX-PCX4711-x

Parts included

- One controller with removable terminal blocks (Power and SA/FC bus are removable)
- One installation instructions sheet

Materials and special tools needed

- Three fasteners appropriate for the mounting surface (M4 screws or #8 screws)
- One 20 cm (8 in.) or longer piece of 35 mm DIN rail and appropriate hardware for DIN rail mount (only)
- Small straight-blade screwdriver for securing wires in the terminal blocks

Mounting

Observe these guidelines when mounting a controller:

- Ensure the mounting surface can support the controller, DIN rail, and any user-supplied enclosure.
- Mount the controller horizontally on 35 mm DIN rail whenever possible.
- Mount the controller in the proper mounting position (Figure 1).
- Mount the controller on a hard, even surface whenever possible in wall-mount applications.
- Use shims or washers to mount the controller securely and evenly on the mounting surface.
- Mount the controller in an area free of corrosive vapors and observe the Ambient Conditions requirements in Table 10.
- Provide for sufficient space around the controller for cable and wire connections for easy cover removal and good ventilation through the controller (50 mm [2 in.] minimum on the top, bottom, and front of the controller).
- Do not mount the controller on surfaces prone to vibration, such as duct work.
- Do not mount the controller in areas where electromagnetic emissions from other devices or wiring can interfere with controller communication.

Observe these additional guidelines when mounting an FX-PCX47 controller in a panel or enclosure:

- Mount the controller so that the enclosure walls do not obstruct cover removal or ventilation through the controller.
- Mount the controller so that the power transformer and other devices do not radiate excessive heat to the controller.
- Do not install the controller in an airtight enclosure.

Figure 1: Controller mounting positions

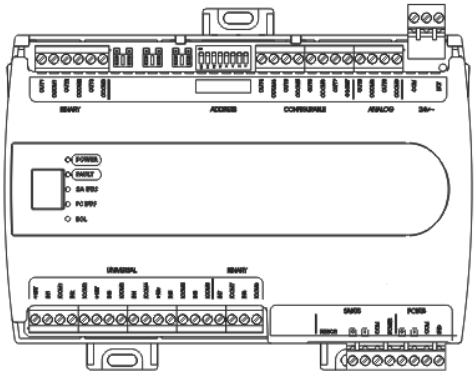

Horizontal Mount Position
Preferred for Wall Mounting
Required for DIN Rail Mounting

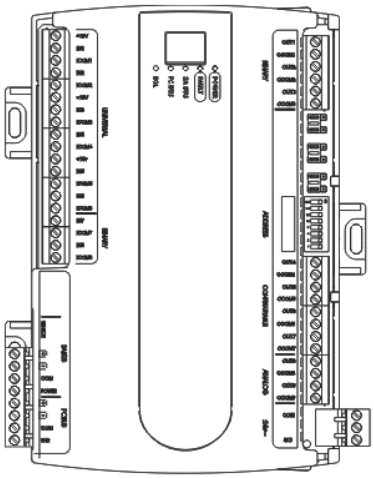

Vertical Mount Position
Acceptable for Wall Mounting

DIN rail mount applications

Mounting the controller horizontal on 35 mm DIN rail is the preferred mounting method.
To mount an FX-PCX47 controller on 35 mm DIN rail:

1. Securely mount a 20 cm (8 in.) or longer section of 35 mm DIN rail horizontal and centered in the desired space so that the controller mounts in the horizontal position shown in Figure 1.

2. Pull the two bottom mounting clips outward from the controller to the extended position (Figure 2).

3. Hang the controller on the DIN rail by the hooks at the top of the (DIN rail) channel on the back of the controller (Figure 2), and position the controller snugly against the DIN rail.

4. Push the bottom mounting clips inward (up) to secure the controller on the DIN rail.

To remove the controller from the DIN rail, pull the bottom mounting clips out to the extended position and carefully lift the controller off the DIN rail.

Wall mount applications

To mount a controller directly on a wall or other flat vertical surface:

1. Pull the two bottom mounting clips outward and ensure they are locked in the extended position as shown in Figure 2.

2. Mark the mounting hole locations on the wall using the dimensions in Figure 2 and one of the mount positions shown in Figure 1. Or, hold the controller up to the wall or surface in a proper mount position and mark the hole locations through the mounting clips.

3. Drill holes in the wall or surface at the marked locations, and insert appropriate wall anchors in the holes (if necessary).

4. Hold the controller in place, and insert the screws through the mounting clips and into the holes (or anchors). Carefully tighten all of the screws.

➤ **Important:** Do not overtighten the mounting screws. Overtightening the screws may damage the mounting clips.

Figure 2: Back of Controller showing extended mounting clips, DIN rail channel, and mounting dimensions, mm (in.)

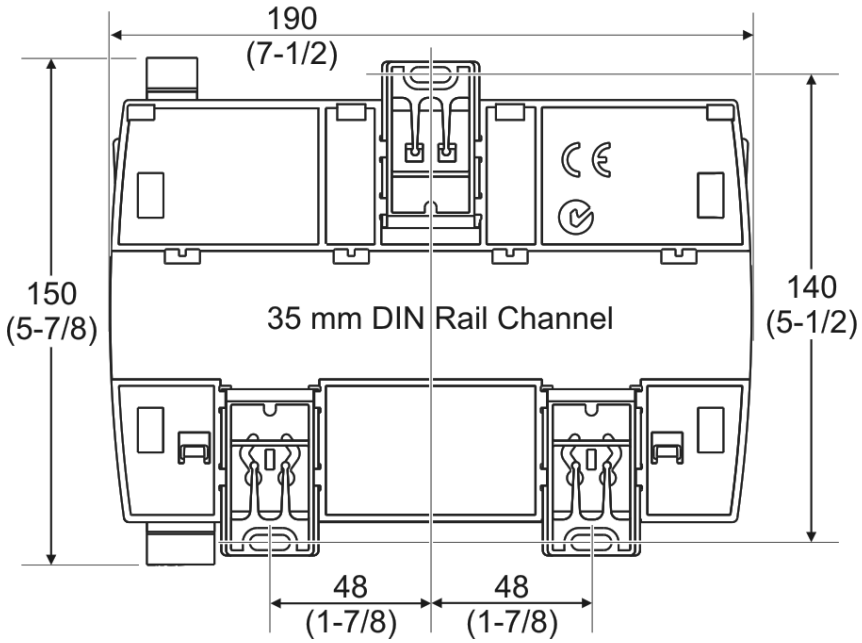

FX-PCX47 physical features

Figure 3: FX-PCX47 physical features

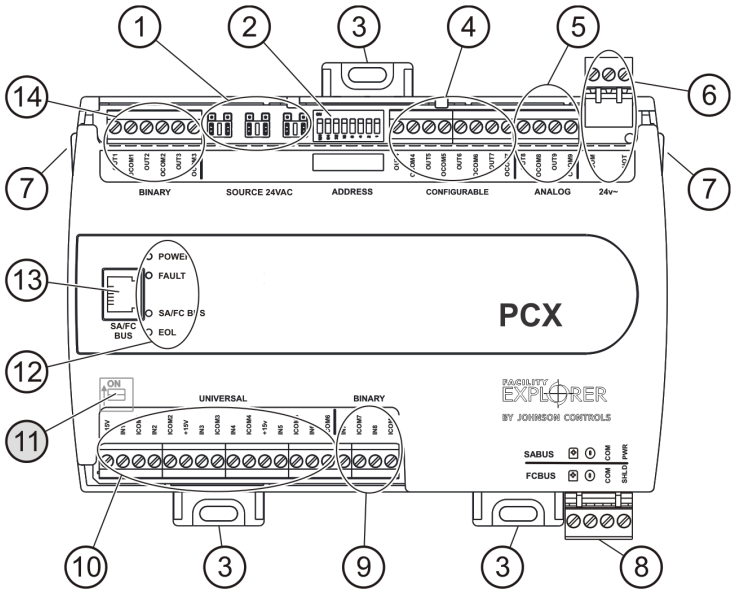

Table 1: FX-PCX47 physical features callouts and descriptions

Callout	Physical feature description
1	Binary Output (BO) Source Power Selection Jumper Pin Blocks, 3 – BO Jumper Pin Blocks. (See Table 3.)
2	Device Address DIP Switch Block. (See Setting the device addresses.)
3	Mounting Clip (One of Three)
4	Configurable Output (CO) Terminal Blocks, 4 – Configurable Outputs. (See Table 3.)
5	Analog Output (AO) Terminal Block, 2 – Analog Outputs. (See Table 3.)
6	24 VAC, Class 2 Supply Power Terminal Block. (See Table 5.)
7	Cover Lift Tab (One of Two). (See Removing the Controller cover.)
8	SA Bus or FC Bus Terminal Block. (See Table 5.)
9	Binary Input (BI) Terminal Block, 2 – Binary Inputs. (See Table 3.)
10	UI Terminal Blocks, 6 – Universal Inputs. (See Table 3.)
11	End-of-Line (EOL) Switch. (See Setting the End-of-Line (EOL) switch) ⓘ **Note:** The EOL Switch is located under the controller cover. You must remove the cover to change the EOL switch position.
12	LED Status Indicators. (See Table 8.)
13	Sensor Actuator (SA) Bus / Field Controller (FC) Bus Port (RJ-12 6-pin Modular Jack). (See SA/FC bus port.)
14	BO Terminal Block, 3 – Binary Outputs. (See Table 3.)

Wiring

Warning

Risk of Electric Shock:

Disconnect or isolate all power supplies before making electrical connections. More than one disconnection or isolation may be required to completely de-energize equipment. Contact with components carrying hazardous voltage can cause electric shock and may result in severe personal injury or death.

Warning

Risque de décharge électrique:

Débrancher ou isoler toute alimentation avant de réaliser un branchement électrique. Plusieurs isolations et débranchements sont peut-être nécessaires pour -couper entièrement l'alimentation de l'équipement. Tout contact avec des composants conducteurs de tensions dangereuses risque d'entraîner une décharge électrique et de provoquer des blessures graves, voire mortelles.

CAUTION

Risk of Property Damage:

Do not apply power to the system before checking all wiring connections. Short circuited or improperly connected wires may result in permanent damage to the equipment.

CAUTION

Risque de dégâts matériels:

Ne pas mettre le système sous tension avant d'avoir vérifié tous les raccords de câblage. Des fils formant un court-circuit ou connectés de façon incorrecte risquent d'endommager irrémédiablement l'équipement.

- **Important:** Do not exceed the controller electrical ratings. Exceeding controller electrical ratings can result in permanent damage to the controller and void any warranty.
- **Important:** Use copper conductors only. Make all wiring in accordance with local, national, and regional regulations.
- **Important:** Electrostatic discharge can damage controller components. Use proper electrostatic discharge precautions during installation, setup, and servicing to avoid damaging the controller.

For detailed information on configuring and wiring an MS/TP Bus, FC bus, and SA bus, refer to the *FX-PC Series Controllers MS/TP Communications Bus Technical Bulletin (LIT-12011670)* or *MS/TP Communications Bus for BCPro System Technical Bulletin (LIT-12011908)*.

Terminal blocks and bus ports

See Figure 3 for terminal block and bus port locations on the controller. Observe the following guidelines when wiring a controller.

Input and Output terminal blocks

All of the input terminal blocks are mounted on the bottom of the controller and the output terminal blocks are mounted on the top of the controller. See Table 3 for more information about I/O terminal functions, requirements, and ratings.

SA/FC bus terminal block

An FX-PCX can be connected to a Sensor/Actuator (SA) bus or a Field Controller (FC) bus, but not to both buses simultaneously. The SA/FC bus terminal block is a removable, 4-terminal plug that fits into a board-mounted jack.

When connecting the FX-PCX to an FC bus, wire the bus terminal block plugs on the controller, and the other controllers in a daisy-chain configuration using 3-wire twisted, shielded cable as shown in Figure 4. See Table 5 for more information.

Figure 4: FC bus terminal block wiring

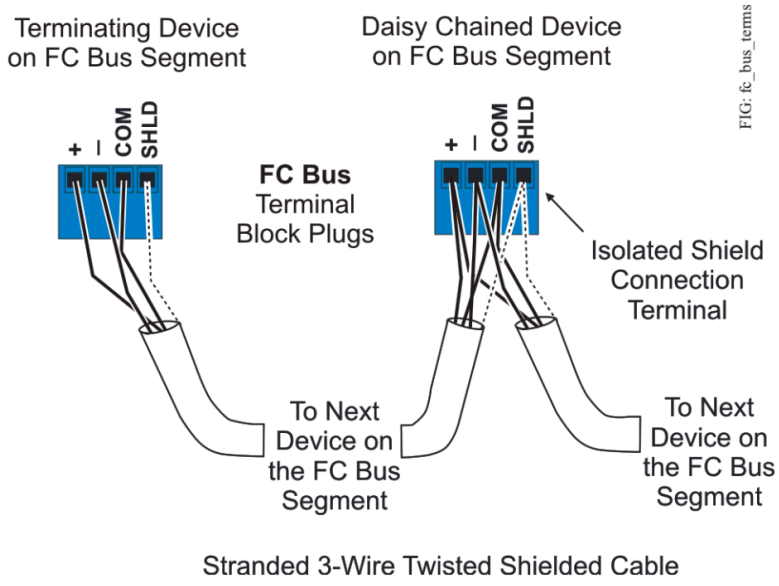

When connecting the FX-PCX to an SA bus, wire the bus terminal block plugs on the controller and other SA bus devices in a daisy-chain configuration using 4-wire twisted, shielded cable as shown in Figure 5. See I/O wiring ratings and requirements table for more information.

Figure 5: SA bus terminal block wiring

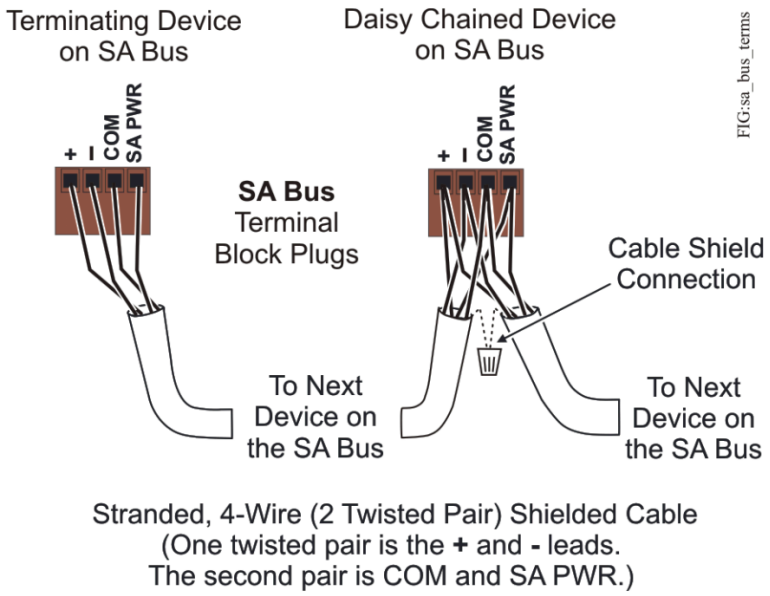

Note:

The SA PWR/SHLD terminal does not supply 15 VDC. The SA PWR/SHLD terminal is isolated and can be used to connect (daisy chain) the 15 VDC power leads on the SA bus (Figure 5) or the cable shields on the FC bus (Figure 4).

The SA bus supervisor supplies 15 VDC to devices on the SA bus requiring power.

SA/FC bus port

The SA/FC bus port on the front of the controller is an RJ-12, 6-position modular jack that provides a connection for devices on the SA bus, a Bluetooth® Commissioning Converter, or an FX-ZFR/ZFR Pro Wireless Router (depending on which bus the FX-PCX is operating on).

The SA/FC bus port is connected internally to the SA/FC bus terminal block. See Table 5 for more information. The SA/FC bus port pin assignment is shown in Figure 6.

Figure 6: Pin number assignments for sensor, SA bus and FC bus ports on Controllers

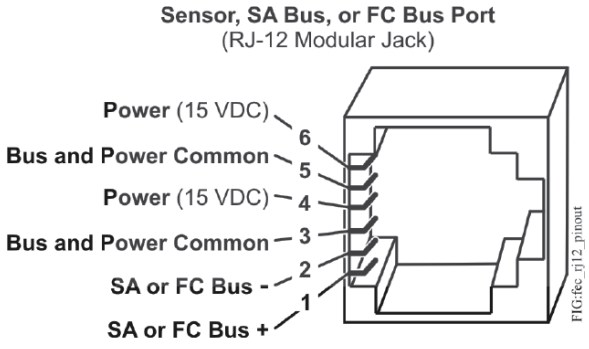

Supply power terminal block

The 24 VAC supply power terminal block is a gray, removable, 3-terminal plug that fits into a board-mounted jack on the top right of the controller.

Wire the 24 VAC supply power wires from the transformer to the HOT and COM terminals on the terminal plug as shown in Figure 7. The middle terminal on the supply power terminal block is not used. See Table 5 for more information about the supply terminal block.

Figure 7: 24 VAC supply power terminal block wiring

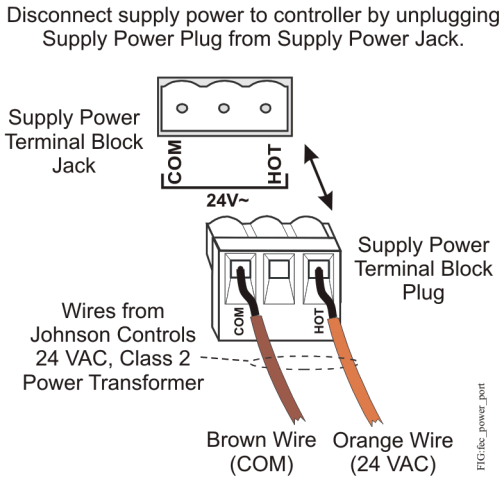

Note: The supply power wire colors may be different on transformers from other manufacturers. Refer to the transformer manufacturer's instructions and the project installation drawings for wiring details.

Important: Connect 24 VAC supply power to the controller and all other network devices so that transformer phasing is uniform across the network devices. Powering network devices with uniform 24 VAC supply power phasing reduces noise, interference, and ground loop problems. The controller does not require an earth ground connection.

Wireless network applications

The controller can also be installed in a wireless application using a wireless application using an FX-ZFR1811 Wireless Field Bus Router.
To configure a controller for use with the FX-ZFR/ZFR Pro Series Wireless Field Bus system:

Note: FX-PCXs can communicate wirelessly on the FC bus only.

1. Connect the FX-ZFR1811 Wireless Field Bus Router to the FC bus port (RJ-12 modular jack) on the front of the controller.

2. Ensure that the controller's device address DIP switches are set to the correct device address. See Setting the device addresses.

3. Set DIP switch 128 to ON, which enables wireless operation on the controller.

For more information on installing a controller in a wireless configuration, refer to the *FX-ZFR1811 Wireless Field Bus Router Installation Instructions (Part No. 24-10325-29)*.

Termination details

A set of Johnson Controls termination diagrams provides details for wiring inputs and outputs to the controllers. See the figures in this section for the applicable termination diagrams.

Table 2: Termination details

Type of field device	Type of Input/ Output	Termination diagrams
Temperature Sensor	UI	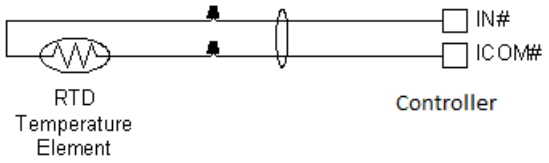
Voltage Input - External Source	UI	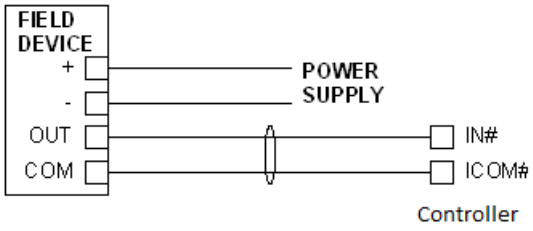
Voltage Input - Internal Source	UI	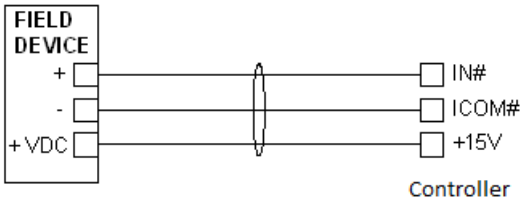
Voltage Input (Self-Powered)	UI	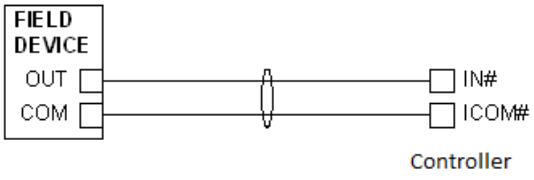
Current Input - External Source (Isolated)	UI	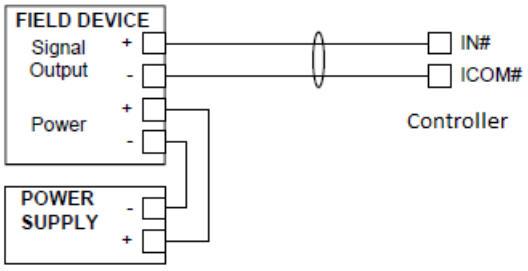

Table 2: Termination details

Type of field device	Type of Input/ Output	Termination diagrams
Current Input - Internal Source (2-wire)	UI	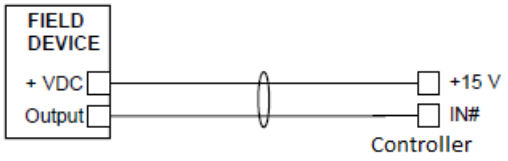
Current Input - Internal Source (3 wire)	UI	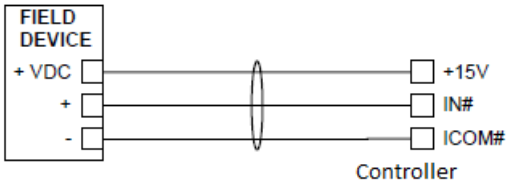
Current Input - External Source (in Loop)	UI	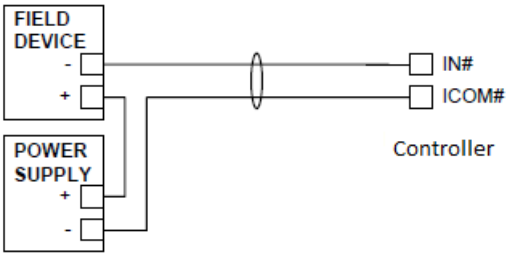
Feedback from EPP-1000	UI	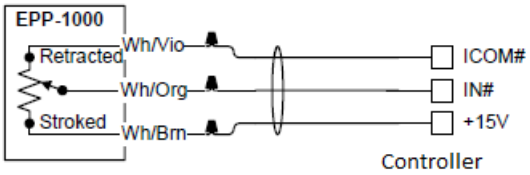
Dry Contact (Binary Input)	UI or BI	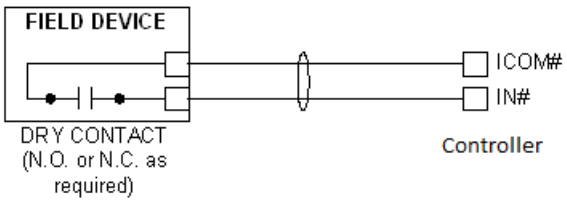
0–10 VDC Output to Actuator (External Source)	CO or AO	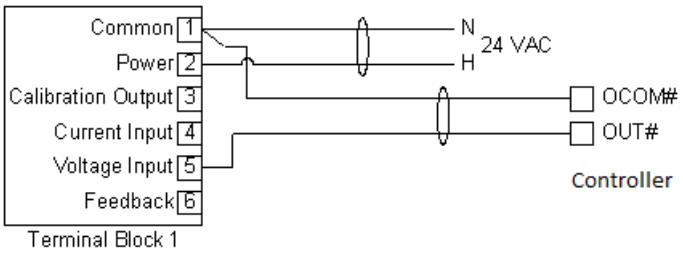

Table 2: Termination details

Type of field device	Type of Input/ Output	Termination diagrams
0–10 VDC Output to Actuator (Internal Source)	CO or AO	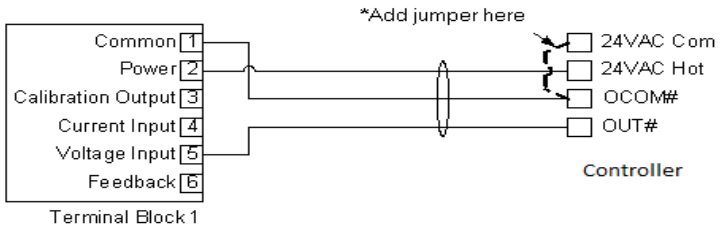
4–20 mA Output to Actuator	CO or AO	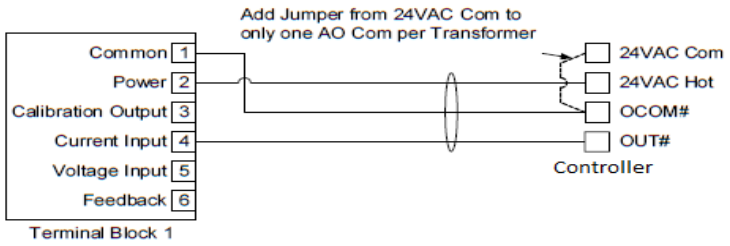
4–20 mA Output to Actuator	CO or AO	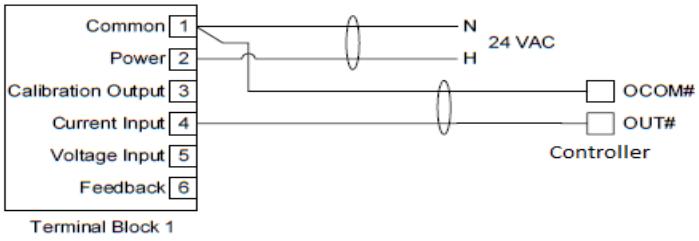
Voltage (Analog Output)	AO	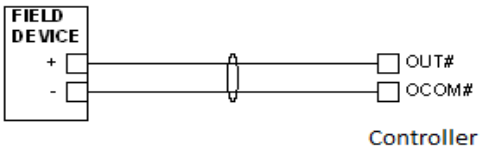
Analog Output (Current)	AO	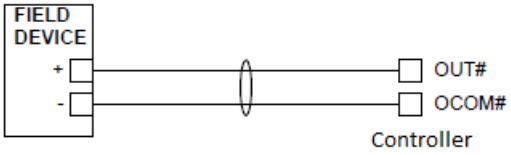
24 VAC Triac Output (Switch Low, External Source)	CO or AO	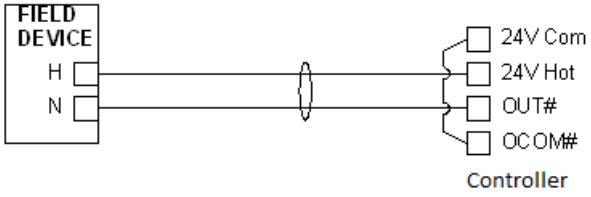

Table 2: Termination details

Type of field device	Type of Input/ Output	Termination diagrams
Incremental Control to Actuator (Switch Low, Externally Sourced)	CO or AO	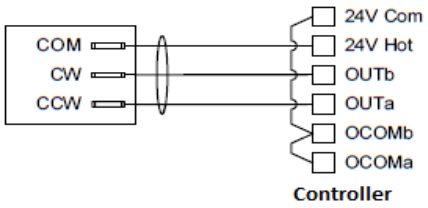
24 VAC Triac Output (Switch High, Externally Sourced)	CO or AO	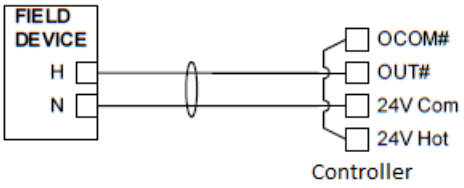
Incremental Control to Actuator (Switch High, Externally Sourced)	CO or AO	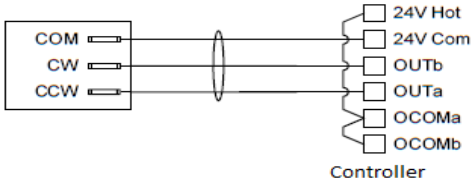
Incremental Control to Actuator (Switch Low, Externally Sourced)	BO	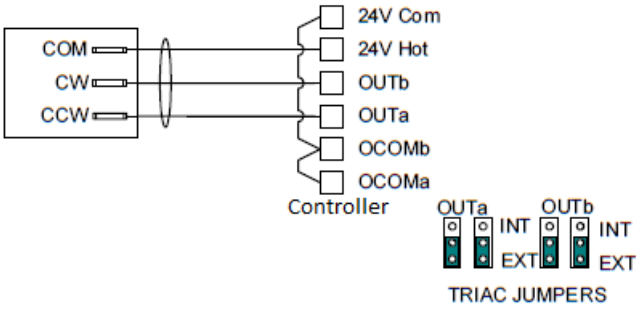
24 VAC Binary Output (Switch Low, Externally Sourced)	BO	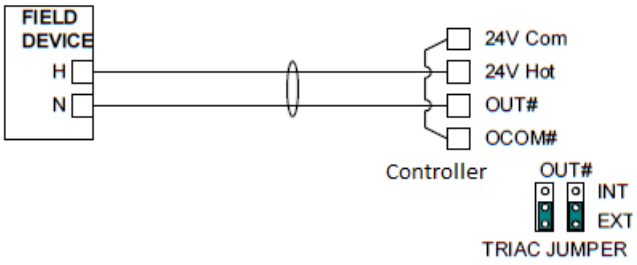

Table 2: Termination details

Type of field device	Type of Input/ Output	Termination diagrams
24 VAC Binary Output (Switch High, Externally Sourced)	BO	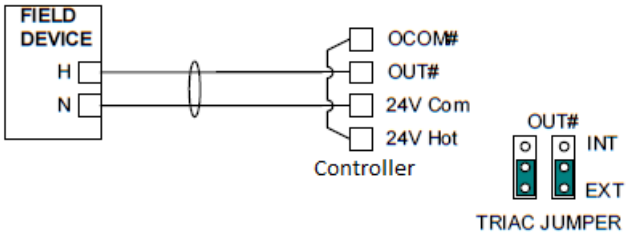
Incremental Control to Actuator (Switch High, Externally Sourced)	BO	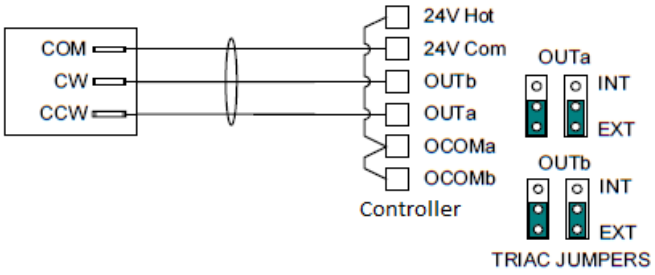
Network Stat with Phone Jack (Fixed Address = 199)	SA Bus	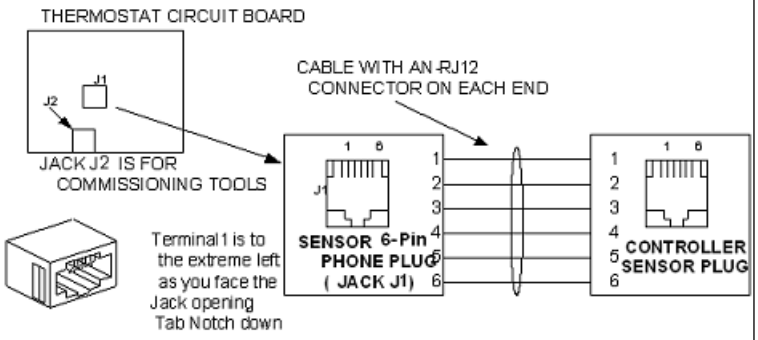
Network Stat with Terminals Addressable	SA Bus	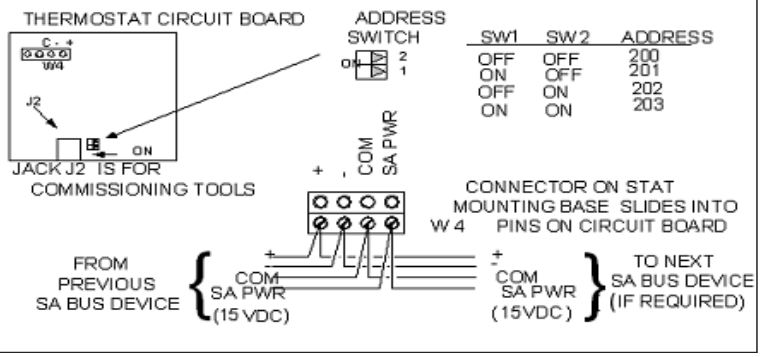

Table 2: Termination details

Type of field device	Type of Input/ Output	Termination diagrams
Network Stat with Terminals (Fixed Address = 199)	SA Bus	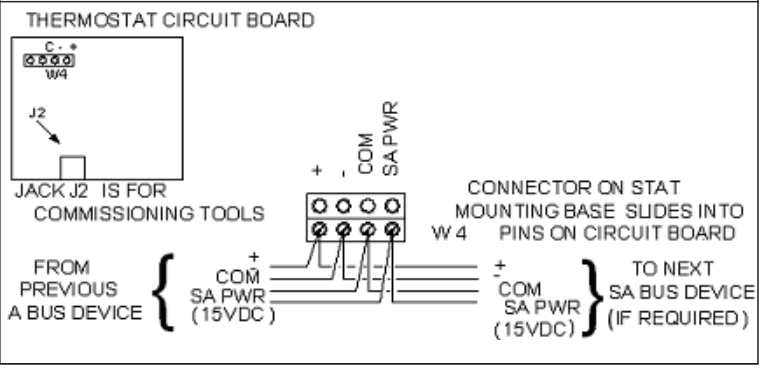

Terminal wiring guidelines, functions, ratings, and requirements

Input and Output wiring guidelines

Table 3 provides information and guidelines about the functions, ratings, and requirements for the controller input and output terminals; and references guidelines for determining proper wire sizes and cable lengths.

ⓘ **Note:** Inputs/outputs with cables less than 30 m (100 ft) typically do not require an offset in the software setup. Cable runs over 30 m (100 ft) may require an offset in the input/output software setup.

In addition to the wiring guidelines in Table 3, observe these guidelines when wiring controller inputs and outputs:

- Run **all** low-voltage wiring and cables separate from high-voltage wiring.
- All input and output cables, regardless of wire size or number of wires, should consist of stranded, insulated, and twisted copper wires.
- Shielded cable is not required for input or output cables.
- Shielded cable is recommended for input and output cables that are exposed to high electromagnetic or radio frequency noise.

I/O wiring ratings and requirements table

Table 3: FX-PCX47 terminal blocks, functions, ratings, requirements, and cables

Terminal block label	Terminal label	Function, ratings, requirements	Determine wire size and maximum cable length
UNIVERSAL (Inputs)	**+15 V**	**15 VDC Power Source** for active (3-wire) input devices connected to the Universal IN*n* terminals. Provides 100 mA total current	Same as (Universal) **IN***n* ⓘ **Note:** Use 3-wire cable for devices that source power from the +15V terminal.
	IN*n*	**Analog Input - Voltage Mode (0–10 VDC)** 10 VDC maximum input voltage Internal 75k ohm Pull-down	See Guideline **A** in Table 4.
		Analog Input - Current Mode (4–20 mA) Internal 100 ohm load impedance ⓘ **Note:** A current loop fail-safe jumper can be positioned to maintain a closed 4 to 20 mA current loop, even when the power to the controller is interrupted or off. See UI current loop jumpers.	See Guideline **B** in Table 4.
		Analog Input - Resistive Mode (0–600k ohm) Internal 12 V. 15k ohm pull up Qualified Sensors: 0-2k ohm potentiometer, RTD (1k Nickel [Johnson Controls sensor], 1k Platinum, and A99B Silicon Temperature Sensor) Negative Temperature Coefficient (NTC) Sensor (10k Type L, 10k JCI Type II, 2.252k Type II)	See Guideline **A** in Table 4.
		Binary Input - Dry Contact Maintained Mode 1 second minimum pulse width Internal 12 V. 15k ohm pull up	See Guideline **A** in Table 4.
	ICOM*n*	**Universal Input Common** for all Universal Input terminals ⓘ **Note:** All Universal ICOM*n* terminals share a common, which is isolated from all other commons.	Same as (Universal) **IN***n*

Table 3: FX-PCX47 terminal blocks, functions, ratings, requirements, and cables

Terminal block label	Terminal label	Function, ratings, requirements	Determine wire size and maximum cable length
BINARY (Inputs)	**IN***n*	**Binary Input - Dry Contact Maintained Mode** 0.01 second minimum pulse width Internal 18 V. 3k ohm pull up	See Guideline **A** in Table 4.
		Binary Input - Pulse Counter/ Accumulator Mode 0.01 second minimum pulse width (50 Hz at 50% duty cycle) Internal 18 V. 3k ohm pull up	
	ICOM*n*	**Binary Input Common** for all Binary Input (IN) terminals ⓘ **Note:** All Binary ICOM*n* terminals share a common, which is isolated from all other commons, except the Configurable Output (CO) common (OCOM*n*) when the CO is defined as an Analog Output.	

Table 3: FX-PCX47 terminal blocks, functions, ratings, requirements, and cables

Terminal block label	Terminal label	Function, ratings, requirements	Determine wire size and maximum cable length
ANALOG (Outputs)	**OUT***n*	**Analog Output - Voltage Mode (0–10 VDC)** 10 VDC maximum output voltage 10 mA maximum output current Required an external load of 1,000 ohm or more. ⓘ **Note:** The Analog Output (AO) operates in the Voltage Mode when connected to devices with impedances greater than 1,000 ohm. Devices that drop below 1,000 ohm may not operate as intended for Voltage Mode applications.	See Guideline **C** in Table 4.
		Analog Output - Current Mode (4–20 mA) Requires and external load between 0 and 300 ohm. ⓘ **Note:** The Analog Output (AO) operates in the Current Mode when connected to devices with impedances less than 300 ohm. Devices that exceed below 300 ohm may not operate as intended for Current Mode applications.	
	OCOM*n*	**Analog Output Signal Common** for all Analog OUT terminals. ⓘ **Note:** All Analog Output Common terminals (OCOM*n*) share a common, which is isolated from all other commons.	

Table 3: FX-PCX47 terminal blocks, functions, ratings, requirements, and cables

Terminal block label	Terminal label	Function, ratings, requirements	Determine wire size and maximum cable length
BINARY (Output) Power Selection Jumper positioned to External (**EXT**) power.	**OUT***n*	**Binary Output - 24 VAC Triac** (External Power Source) Connects OUT*n* to OCOM*n* when activated. External Power Source Requirements: 30 VAC maximum output voltage 0.5 A maximum output current 1.3 A at 25% duty cycle 40 mA minimum load current	See Guideline **C** in Table 4.
	OCOM*n*	**Binary Output Common** (for OUT*n* terminal) ⓘ **Note:** Each Binary Output Common terminal (OCOM*n*) is isolated from **all** other commons, including other Binary Output Common terminals.	
BINARY (Output) Power Selection Jumper positioned to Internal (**INT**) power.	**OUT***n*	**Binary Output - 24 VAC Triac** (Internal Power Source) Sources internal 24 VAC power (24~ HOT).	See Guideline **C** in Table 4.
	OCOM*n*	**Binary Output - 24 VAC Triac** (Internal Power Source) Connects OCOM*n* to 24~ when activated. Internal Power Source: 30 VAC maximum output voltage 0.5 A maximum output current 1.3 A at 25% duty cycle 40 mA minimum load current	

Table 3: FX-PCX47 terminal blocks, functions, ratings, requirements, and cables

Terminal block label	Terminal label	Function, ratings, requirements	Determine wire size and maximum cable length
CONFIGURABLE (Outputs)	**OUT***n*	**Analog Output - Voltage Mode (0–10 VDC)** 10 VDC maximum output voltage 10 mA maximum output current Required an external load of 1,000 ohm or more.	See Guideline **A** in Table 4.
		Binary Output - 24 VAC Triac (External Power Source only) Connects OUT*n* to OCOM*n* when activated. External Power Source Requirements: 30 VAC maximum output voltage 0.5 A maximum output current 1.3 A at 25% duty cycle 40 mA minimum load current	See Guideline **C** in Table 4.
	OCOM*n*	**Analog Output Signal Common** All Configurable Outputs (COs) defined as Analog Outputs (AOs) share a common, which is isolated from all other commons except the Binary Input common. **Binary Output Signal Common** All Configurable Outputs (COs) defined as Binary Outputs are isolated from all other commons, including other CO commons.	Same as (Configurable) **OUT***n*.

ⓘ **Note:** See Table 4 to determine wire size and cable lengths for cables.

Cable and wire length guidelines

The table below defines cable length guidelines for the various wire sizes that may be used for wiring low-voltage (<30 V) input and outputs.

Table 4: Cable length guidelines for recommended wire sizes for low-voltage (<30 V) Inputs and Outputs

Guideline	Wire size/Gauge and type	Maximum cable length and type	Assumptions
A	1.0 mm (18 AWG) stranded copper	457 m (1,500 ft) twisted wire	100 mV maximum voltage drop Depending on cable and the connected input or output device, you may have to define an offset in the setup software for the input or output point.
	0.8 mm (20 AWG) stranded copper	297 m (975 ft) twisted wire	
	0.6 mm (22 AWG) stranded copper	183 m (600 ft) twisted wire	
	0.5 mm (24 AWG) stranded copper	107 m (350 ft) twisted wire	
B	1.0 mm (18 AWG) stranded copper	229 m (750 ft) twisted wire	100 mV maximum voltage drop Depending on cable and the connected input or output device, you may have to define an offset in the setup software for the input or output point.
	0.8 mm (20 AWG) stranded copper	137 m (450 ft) twisted wire	
	0.6 mm (22 AWG) stranded copper	91 m (300 ft) twisted wire	
	0.5 mm (24 AWG) stranded copper	61 m (200 ft) twisted wire	
C	See Figure 8 to select wire size/gauge. Use stranded copper wire.	See Figure 8 to determine cable length. Use twisted wire cable.	N/A

Maximum cable length versus load current

Use the figure below to estimate the maximum cable length relative to the wire size and the load current (in mA) when wiring inputs and outputs.

ⓘ **Note:** Figure 8 applies to low-voltage (<30 V) inputs and outputs only.

Figure 8: Maximum wire length for low-voltage (<30V) Inputs and Outputs by current and wire size

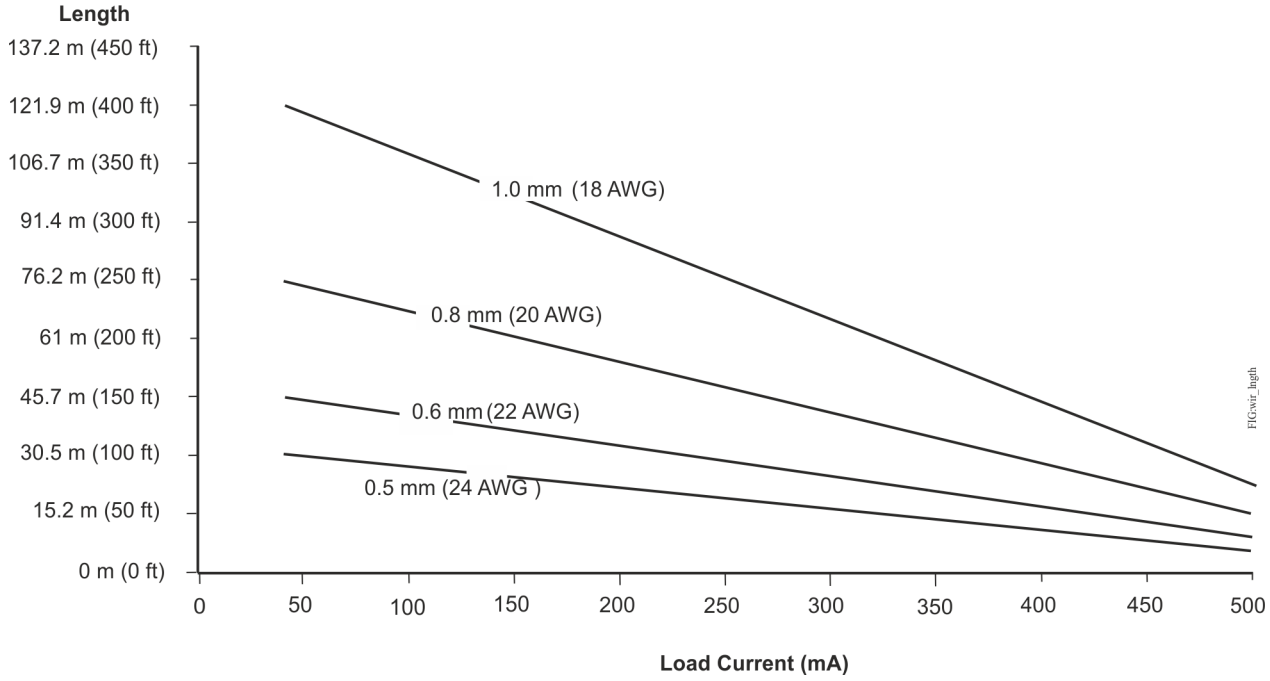

SA/FC bus and supply power wiring guidelines

Table 5 provides information about the functions, ratings, and requirements for the communication bus and supply power terminals; and guidelines for wire sizes, cable types, and cable lengths when wiring the controller's communication buses and supply power.

In addition to the guidelines in Table 5, observe these guidelines when wiring an SA or FC bus and the 24 VAC supply power:

- Run **all** low-voltage wiring and cables separate from high-voltage wiring.
- All SA and FC bus cables, regardless of wire size, should be twisted, insulated, stranded copper wire.
- Shielded cable is strongly recommended for all SA and FC bus cables.
- Refer to the *FX-PC Series Controllers MS/TP Communications Bus Technical Bulletin (LIT-12011670)* or *MS/TP Communications Bus for BCPro System Technical Bulletin (LIT-12011908)* for detailed information regarding wire size and cable length requirements for the SA and FC buses.

Table 5: Communications bus and supply power terminal blocks, functions, ratings, requirements, and cables

Terminal block/Port label	Terminal labels	Function, electrical ratings/ Requirements	Recommended cable type
FC BUS or **SA BUS**	**+** **-**	FC or SA Bus Communications	FC Bus: 0.6 mm (22 AWG) stranded, 3-wire twisted, shielded cable recommended. SA Bus: 0.6 mm (22 AWG) stranded, 4-wire (2 twisted-pairs), shielded cable recommended. ⓘ **Note:** On the SA Bus, the + and - wire are one twisted pair, and the COM and SA PWR are the second twisted pair of wires.
	COM	Signal Reference (Common) for FC or SA Bus communications	
	SHLD or **SAPWR**	**SHLD on FC Bus:** Isolated terminal (optional shield drain connection **SAP WR on SA Bus:** 15 VDC power lead connection ⓘ **Note:** The SA PWR terminal on an FX-PCX controller does not supply 15 VDC. The SA bus supervisor supplies 15 VDC to devices on the SA bus requiring power.	
SA/FC BUS (Port)		RJ-12 6-Position Modular Connector provides: FC or SA Bus Communications FC or SA Bus Signal Reference and 15 VDC Common Commissioning Converter or FX-ZFR/ZFR Pro Wireless Router (Maximum total current draw for SA bus is 240 mA.)	Bluetooth® Commissioning Converter retractable cable or 24 AWG 3-pair CAT 3 Cable <30.5 m (100 ft)
24~	**HOT**	**24 VAC Power Supply - Hot** Supplies 20–30 VAC (Nominal 24 VAC)	0.8 mm to 1.0 mm (18 AWG) 2-wire
	COM	**24 VAC Power Supply - Common** (Isolated from all other Common terminals on controller.)	

ⓘ **Note:**

- See Table 4 to determine wire size and cable lengths for cables.
- The SA Bus and FC Bus wiring recommendations in this table are for MS/TP bus communications at 38,400 baud. For more information, refer to the *FX-PC Series Controllers MS/TP Communications Bus Technical Bulletin (LIT-12011670)* or *MS/TP Communications Bus for BCPro System Technical Bulletin (LIT-12011908)*.

Setup and adjustments

Setting the device addresses

FX-PCX controllers are master devices on MS/TP (SA or FC) buses. Before operating controllers on a bus, you **must** set a valid and unique device address for each controller on the bus. You set a controller's device address by setting the positions of the switches on the DIP switch block at the top of the controller (Figure 3). Device addresses 4 through 127 are the valid addresses for these controllers.
The DIP switch block has eight switches numbered 128, 64, 32, 16, 8, 4, 2, and 1 (Figure 9). Switches 64 through 1 are device address switches. Switch 128 is a mode switch that enables a controller to operate on an FX-ZFR/ZFR Pro Series Wireless Field Bus. Switch 128 must be set to off for all hard-wired SA and FC bus applications. Set switch 128 to ON for wireless FC bus applications **only**.

Figure 9: Device address DIP switch block set to address 21

Note: Switch 128 is used to enable or disable a controller for wireless operation.



ⓘ **Note:** Controllers ship with switch 128 ON and the remaining address switches off rendering the controllers wired devices, which do not operate on MS/TP buses, but will not interfere with bus operation. Set a valid and unique device address on the controller before applying power to the controller on the bus.

To set the device addresses on FX-PCX controllers:

1. Set **all** of the switches on the address DIP switch block (128 through 1) to Off.
2. Set one or more of the seven address switches (64 though 1) to ON, so that the sum of the switch numbers set to ON equals the intended device address. See Table 6 for valid device addresses.

Set the highest number switch that is less than or equal to the intended device address to ON. Then continue setting lower numbered switches until the total equals the intended address. For example, if the intended device address is 21, set switch 16 to ON first, then set switch 4 ON, followed by switch 1 (16+4+1= 21). See Figure 9.

3. Set switch 128 to ON **only** for controllers on an FX-ZFR/ZFR Pro Series Wireless Field Bus application. For all hard-wired SA and FC bus applications, ensure that switch 128 is set to Off.

ⓘ **Note:** Do **not** connect a controller with switch 128 set to ON to an active (hard-wired) SA or FC bus. When a controller with switch 128 set to ON and a device address from 4 to 127 is connected to a wired field bus, the entire field bus is rendered inoperable until the controller is disconnected or switch 128 is set to Off.

Refer to the *WNC1800/ZFR182x Pro Series Wireless Field Bus System Technical Bulletin (LIT-12012356)* or the *FX-ZFR Series Wireless Field Bus System Technical Bulletin (LIT-12011660)* for more information on device addresses in wireless applications.

4. Set a unique and sequential device address for each of the controllers connected on the SA or FC bus starting with device address 4.

To ensure the best bus performance, set sequential device addresses with no gaps in the device address range (4, 5, 6, 7, 8, 9, and so on). The controllers do **not** need to be physically connected on the bus in their numerical device address order.

5. Write each controller's device address on the white label below the DIP switch block on the controller's cover.

Table 6 describes the FC bus and SA bus devices addresses for Johnson Controls MS/TP communications bus applications.

Refer to the *FX-PC Series Controllers MS/TP Communications Bus Technical Bulletin (LIT-12011670)* or *MS/TP Communications Bus for BCPro System Technical Bulletin (LIT-12011908)* for more information on controller device addresses and how to set them on MS/TP buses.

Table 6: SA/FC bus device address descriptions

Device address	Use on description
0 (Switch 128 Off)	Reserved for FC Bus Supervisory Controller (not for use on controllers).
1 to 3 (Switch 128 Off)	Reserved for peripheral devices (not for use on controllers).
4 to 127 (Switch 128 Off)	Used for MS/TP master devices controllers) that are hardwired to an SA Bus or FC Bus.
0 to 3 (Switch 128 ON)	Reserved addresses for wired devices (not for use on controllers). ⓘ **Note:** FX-PCX controllers ship with switch 128 ON and the remaining address switches off rendering the controllers wired devices, which do not operate on MS/TP buses.
4 to 127 (Switch 128 ON)	Valid for MS/TP Master controllers on **wireless FC Buses only**. ⓘ **Note:** Do **not** connect a controller with switch 128 ON to an active (**hard-wired**) SA or FC Bus. When a controller with switch 128 ON and a device address from 4 to 127 is connected to a wired field bus, the entire field bus is rendered inoperable until the controller is disconnected or switch 128 is set to Off.

Removing the Controller cover

➤ **Important:** Electrostatic discharge can damage controller components. Use proper electrostatic discharge precautions during installation, setup, and servicing to avoid damaging the controller.

➤ **Important:** Disconnect all power sources to the controller before removing cover and changing the position of any jumper or the EOL switch on the controller. Failure to disconnect power before changing a jumper or EOL switch position can result in damage to the controller and void any warranties.

The controller cover is held in place by four plastic latches that extend from the base and snap into slots on the inside of the housing cover.

To remove the controller cover:

1. Place your fingernails under the two cover lift tabs (Figure 3) on the sides of the housing cover and gently pry the top of the cover away from the base to release the cover from the two upper latches.

2. Pivot the top of the cover further to release it from the lower two latches.

3. Replace the cover by placing it squarely over the base, and then gently and evenly push the cover on to the latches until they snap into the latched position.

Figure 10: FX-PCX47 with cover removed showing EOL switch and jumper positions

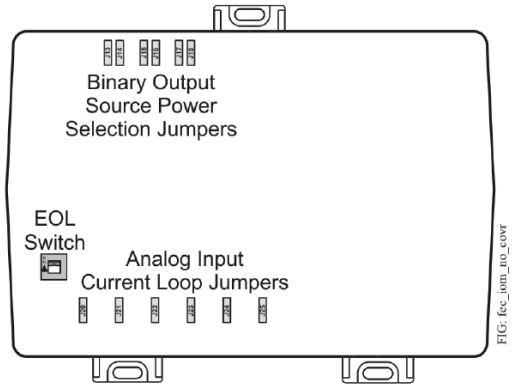

Setting the End-of-Line (EOL) switch

Each controller has an EOL switch, which, when set to ON, sets the controller as a terminating device on the bus. See Figure 10 for the EOL switch location. The default EOL switch position is Off.

Figure 11: End-of-Line switch positions



To set the EOL switch on a controller:

1. Determine the physical location of the controller on the SA or FC bus.

2. Determine if the controller must be set as a terminating device on the bus.

Note: The EOL termination rules for SA buses and FC buses are different. Refer to the *FX-PC Series Controllers MS/TP Communications Bus Technical Bulletin (LIT-12011670)* or *MS/TP Communications Bus for BCPro System Technical Bulletin (LIT-12011908)* for detailed information regarding EOL termination rules and EOL switch settings on SA and FC buses.

3. If the controller is a terminating device on the FC bus, set the EOL switch to ON. If the controller is not a terminating device on the bus, set the EOL switch to Off.

When a controller is connected to power with its EOL switch set to ON, the amber EOL LED on the controller cover is lit.

Input/Output jumper settings

Binary Output (BO) source power selection jumpers

Warning

Risk of Electric Shock:

Disconnect or isolate all power supplies before making electrical connections. More than one disconnection or isolation may be required to completely de-energize equipment. Contact with components carrying hazardous voltage can cause electric shock and may result in severe personal injury or death.

Warning

Risque de décharge électrique:

Débrancher ou isoler toute alimentation avant de réaliser un branchement électrique. Plusieurs isolations et débranchements sont peut-être nécessaires pour -couper entièrement l'alimentation de l'équipement. Tout contact avec des composants conducteurs de tensions dangereuses risque d'entraîner une décharge électrique et de provoquer des blessures graves, voire mortelles.

➽ **Important:** Do **not** connect an external power source to a BO when the BO power source jumper is in the internal power (INT) position. Connecting external power to a BO that sources internal power can damage the controller and void any warranties.

The BO source power selection jumpers determine whether a BO provides internal power (sourced from the controller) to the output load (INT position) or requires an external power source (EXT position) for the output load. Figure 12 shows an example of a controller BOs and the associated power selection jumpers to the right of the BOs terminal block.

Figure 12: Example binary Outputs and the associated source power jumper positions

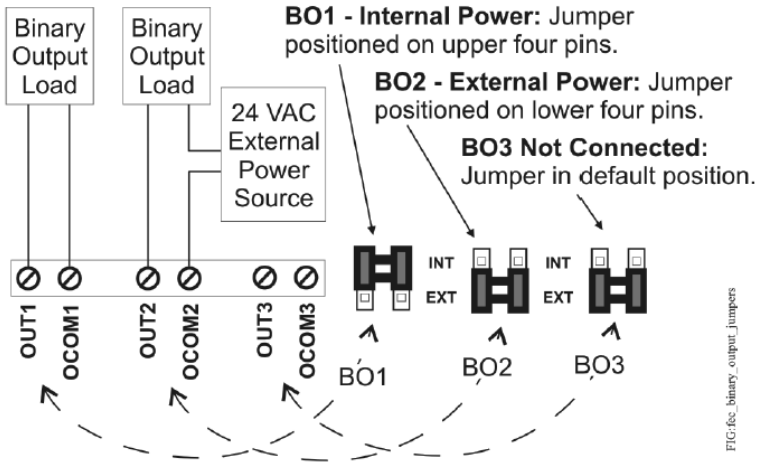

UI current loop jumpers

The UI current loop fail-safe jumpers are on the circuit board under the controller cover near the UI terminals (Figure 10). When a UI is defined (in the system software) as a 4-20 mA Analog Input and the UI's current loop jumper is in the Disabled (default) position (Figure 13), the 4-20 mA current loop circuit opens whenever power to the controller is interrupted or off.

Figure 13: Current loop jumper positions

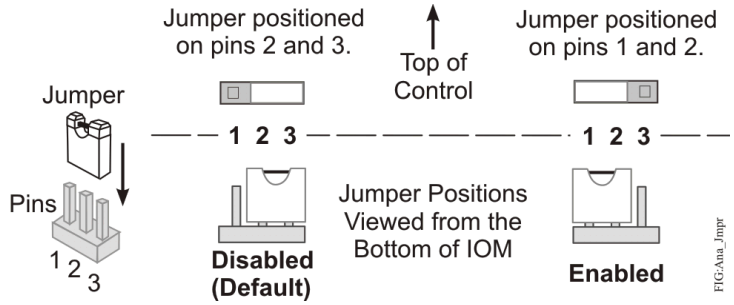

Setting the current loop jumper to the Enabled position (Figure 13) connects an internal 100 ohm resistor across the UI terminals, which maintains the 4-20 mA current loop circuit even when power to the controller is interrupted or off.

➤ **Important:** Current Loop jumpers must be in the Disabled (default) position for all UIs that are not set up to operate as 4-20 mA analog inputs.

Current loop jumper ID table

The following table identifies the current loop jumpers associated with each UI on the FX-PCX47 controller.

Table 7: FX-PCX47 UI Inputs and jumper labels

Universal Input label	Jumper label on circuit board
IN1	J20
IN2	J21
IN3	J22
IN4	J23
IN5	J24
IN6	J25

Commissioning the Controllers

You commission the FX-PCA controllers with the CCT software, either via a Bluetooth Wireless Commissioning Converter, a ZigBee® wireless dongle, or in BACnet Router mode when connected to a Facility Explorer Supervisory Controller. Refer to the *Controller Tool Help (LIT-12011147)* for detailed information on commissioning controllers.

ⓘ **Note:** The MAP Gateway serves as a replacement for the BTCVT, which is no longer available for purchase, but continues to be supported.

Troubleshooting the Controllers

Observe the Status LEDs on the front of the controller and see the table below to troubleshoot the controller.

Table 8: Status LEDs and description of LED states

LED label	LED color	Normal LED state	Description of LED states
POWER	Green	On Steady	Off Steady = No Supply Power or the controller's polyswitch/resettable fuse is open. Check Output wiring for short circuits and cycle power to controller. On Steady = Power Connected
FAULT	Red	Off Steady	Off Steady = No Faults On Steady = Device Fault; no application loaded; Main Code download required, if controller is in Boot mode, or a firmware mismatch exists between the controller and the FX-ZFR1811 Wireless Field Bus Router. Blink - 2 Hz = Download or Startup in progress, not ready for normal operation
SA/FC BUS	Green	Blink - 2 Hz	Blink - 2 Hz = Data Transmission (normal communication) Off Steady = No Data Transmission (N/A - auto baud not supported) On Steady = Communication lost, waiting to join communication ring

Table 8: Status LEDs and description of LED states

LED label	LED color	Normal LED state	Description of LED states
EOL	Amber	Off (Except on terminating devices)	On Steady = EOL switch in ON position Off Steady = EOL switch in Off position

Repair information

If a controller fails to operate within its specifications, replace the controller. For a replacement controller, contact your Johnson Controls representative.

Accessories ordering information table

See the table below for controller accessories ordering information.

Table 9: Accessories ordering information

Product code number	Description
FX-BTCVT-1	Bluetooth Commissioning Converter, with Bluetooth® Technology
FX-ZFR1811-0	Wireless Field Bus Router
TP-2420	Transformer, 120 VAC Primary to 24 VAC secondary, 20 VA, Wall Plug
Y65T31-0	Transformer, 120/208/240 VAC Primary to 24 VAC Secondary, 40 VA, Foot Mount, 8 in. Primary Leads and Secondary Screw Terminals, Class 2 ⓘ **Note:** Additional Y6x-x Series transformers are also available. Refer to the *Series Y63, Y64, Y65, Y66, and Y69 Transformers Product Bulletin (LIT-125755)* for more information.
AS-XFR050-0	Power transformer (Class 2, 24 VAC, 50 VA maximum output), no enclosure
MS-TBK4BUS-0	Replacement SA/FC Bus Terminal Blocks, 4-Position, Gray, Bulk Pack ⓘ **Note:** This is the standard terminal block that is provided with the controller.
AP-TBK4SA-0	Replacement SA Bus Terminal Blocks, 4-Position, Brown, Bulk Pack of 10
AP-TBK4FC-0	Replacement FC Bus Terminal Blocks, 4-Position, Blue, Bulk Pack of 10
AP-TBK3PW-0	Replacement Power Terminal Blocks, 3-Position, Gray, Bulk Pack of 10

Table 9: Accessories ordering information

Product code number	Description
ZFR-USBHA-0	USB Dongle with ZigBee Driver provides a wireless connection through CCT to allow wireless commissioning of the wirelessly enabled FX-PCG, FX-PCA, FX-PCX, and FX-PCV field controllers. Also allows use of the FX-ZFR Checkout Tool (FX-ZCT) in CCT. ⓘ **Note:** The ZFR-USBHA-0 replaces the IA OEM DAUBI_2400 ZigBee USB dongle. For additional information on the ZFR-USBHA-0 ZigBee dongle, refer to the *FX-ZFR Series Wireless Field Bus System Technical Bulletin (LIT-12011660)* or *FX-ZFR Series Wireless Field Bus System Quick Reference Guide (LIT-12011696)*.

Technical specifications

Table 10: FX-PCX4711-x technical specifications

Product Code Number	FX-PCX4711-x Expansion Input/Output Module
Supply Voltage	24 VAC (nominal, 20 VAC minimum/30 VAC maximum), 50/60 Hz, power supply Class 2 (North America), Safety Extra-Low Voltage (SELV) (Europe)
Power Consumption	14 VA maximum for FX-PCX4711 only ⓘ **Note:** VA rating does **not** include any power supplied to the peripheral devices connected to Binary Outputs (BOs) or Configurable Outputs (COs), which can consume up to 12 VA for each BO or CO; for a possible total consumption of an additional 84 VA (maximum).
Ambient Conditions	**Operating:** 0° to 50°C (32° to 122°F); 10% to 90% RH noncondensing **Storage:** -40° to 80°C (-40° to 176°F); 5% to 95% RH noncondensing
Addressing	DIP switch set; valid controller device addresses 4–127 (Device addresses 0–3 and 128–255 are reserved and not valid addresses.)
Communications Bus	**BACnet® MS/TP, RS-485:** 3-wire FC Bus between the supervisory controller and other controllers 4-wire SA bus between controller, network sensors and other sensor/actuator devices, includes a lead to source 15 VDC supply power (from controller) to bus devices.
Processor	H8SX/166xR Renesas® 32-bit microcontroller
Memory	512 KB Flash Memory and 128 KB Random Access Memory (RAM)

Table 10: FX-PCX4711-x technical specifications

Input and Output Capabilities	**6 - Universal Inputs:** Defined as 0–10 VDC, 4–20 mA, 0–600k ohm, or Binary Dry Contact **2 - Binary Inputs:** Defined as Dry Contact Maintained or Pulse Counter/Accumulator Mode **3 - Binary Outputs:** Defined as 24 VAC Triac (selectable internal or external source power) **4 - Configurable Outputs:** Defined as 0–10 VDC or 24 VAC/DC Field-Effect Transistor (FET) BO **2 - Analog Outputs:** Defined as 0–10 VDC or 4–20 mA
Analog Input/Analog Output Resolution and Accuracy	**Input:** 16-bit resolution **Output:** 16-bit resolution, +/- 200 mV accuracy in 0-10 VDC applications
Terminations	Input/Output: Fixed Screw Terminal Blocks SA/FC Bus and Supply Power: 4-Wire and 3-Wire Pluggable Screw Terminal Blocks SA/FC Bus Port: RJ-12 6-Pin Modular Jacks
Mounting	Horizontal on single 35 mm DIN rail mount (preferred), or screw mount on flat surface with three integral mounting clips on controller
Housing	Enclosure material: ABS and polycarbonate UL94 5VB; Self-extinguishing, Plenum Rated Protection Class: IP20 (IEC 60529)
Dimensions(Height x Width x Depth)	150 mm x 190 mm x 53 mm (5-7/8 in. x 7-1/2 in. x 2-1/8 in.) including terminals and mounting clips ⓘ **Note:** Mounting space requires an additional 50 mm (2 in.) space on top, bottom and front face of controller for easy cover removal, ventilation and wire terminations.
Weight	0.5 kg (1.1 lb)

Table 10: FX-PCX4711-x technical specifications

Compliance	**United States:** UL Listed, File E107041, CCN PAZX, UL 916, Energy Management Equipment FCC Compliant to CFR47, Part 15, Subpart B, Class A
	Canada: UL Listed, File E107041, CCN PAZX7 CAN/CSA C22.2 No.205, Signal Equipment Industry Canada Compliant, ICES-003
	Europe: Johnson Controls declares that this product is in compliance with the essential requirements and other relevant provisions of the EMC Directive. ⓘ **Note:** Conducted RF Immunity within EN 61000-6-2 meets performance criteria B.
CE	**Australia and New Zealand:** RCM Mark, Australia/NZ Emissions Compliant
	BACnet International: BACnet Testing Laboratories (BTL) Protocol Revision 4 Listed BACnet Application Specific Controller (B-ASC)

The performance specifications are nominal and conform to acceptable industry standard. For application at conditions beyond these specifications, consult the local Johnson Controls® office. Johnson Controls shall not be liable for damages resulting from misapplication or misuse of its products.

Points of single contact

APAC	Europe	NA/SA
JOHNSON CONTROLS C/O CONTROLS PRODUCT MANAGEMENT NO. 32 CHANGJIJANG RD NEW DISTRICT WUXI JIANGSU PROVINCE 214028 CHINA	JOHNSON CONTROLS WESTENDHOF 3 45143 ESSEN GERMANY	JOHNSON CONTROLS 507 E MICHIGAN ST MILWAUKEE WI 53202 USA