FX-WRZ7860-0 Receiver for One-to-One Wireless Room Sensing Systems Installation Instructions

Applications

The FX-WRZ7860-0 Receiver for One-to-One Wireless Room Sensing Systems is designed to receive wireless RF temperature and humidity data from FX-WRZ Series Wireless Room Sensors, and provide single zone control data to specified Facility Explorer digital controllers in building HVAC systems. The FX-WRZ Series Wireless Room Sensor and FX-WRZ7860-0 Receiver combination is a functional equivalent to a network sensor, such as an NS-BTP7001-0, but eliminates communications wiring (that is usually placed inside the wall) between the room sensor and receiver.

Like a network sensor, the FX-WRZ7860-0 Receiver is designed to communicate over a Sensor Actuator (SA) Bus interface via MS/TP BACnet® protocol with Johnson Controls® FX-PC Series Programmable Controllers (FX-PCA, FX-PCG, FX-PCV). The receiver supplies the sensed zone temperature and humidity, temperature setpoint, and occupancy override data.

In a typical application, one FX-WRZ Series Wireless Room Sensor reports to one FX-WRZ7860-0 Receiver; however, up to five FX-WRZ Series Wireless Room Sensors can be associated with a single FX-WRZ7860-0 Receiver. In multi-sensor applications, the receiver passes all the room sensors' data to the controller. The FX-PC Series Controller can be configured to either average the room sensors' temperature and humidity input, or select the highest or lowest sensed temperature and humidity for control of the target zone.

The FX-WRZ7860-0 Receiver uses direct-sequence, spread-spectrum RF technology, and operates on the 2.4 GHz Industrial, Scientific, and Medical (ISM) band. The receiver meets the IEEE 802.15.4 standard for low power, low duty cycle RF transmitting systems. An FX-WRZ7860-0 Receiver operates as a transceiver to create a bidirectional association with a FX-WRZ Series Wireless Room Sensor.

Refer to the *FX-WRZ Series One-to-One Wireless Room Sensing Systems Technical Bulletin (LIT-12011663)* for information on commissioning the FX-WRZ7860-0 Receiver, and configuring One-to-One wireless room sensing systems.

⚠ CAUTION

Risk of Personal Injury and Property Damage

The FX-WRZ7860-0 Receiver is intended to provide an input to equipment under normal operating conditions. Where failure or malfunction of the receiver could lead to personal injury or property damage to the controlled equipment or other property, additional precautions must be designed into the control system. Incorporate and maintain other devices, such as supervisory or alarm systems or safety or limit controls, intended to warn of or protect against failure or malfunction of the receiver.

Part No. 24-10563-63 Rev. G

2019-04-05

(barcode for factory use only)

⚠ CAUTION

Risque de blessure et dégâts matériels.

Le FX-WRZ7860-0 Receiver est destiné à transmettre des données entrantes à un équipement dans des conditions normales de fonctionnement. Lorsqu'une défaillance ou un dysfonctionnement du receiver risque de provoquer des blessures ou d'endommager l'équipement contrôlé ou un autre équipement, la conception du système de contrôle doit intégrer des dispositifs de protection supplémentaires. Veiller dans ce cas à intégrer de façon permanente d'autres dispositifs, tels que des systèmes de supervision ou d'alarme, ou des dispositifs de sécurité ou de limitation, ayant une fonction d'avertissement ou de protection en cas de défaillance ou de dysfonctionnement du receiver.

North American Emissions Compliance

North American Emissions Compliance

United States

Compliance Statement (Part 15.19)

This device complies with Part 15 of the FCC Rules. Operation is subject to the following two conditions:

1. This device may not cause harmful interference, and
2. This device must accept any interference received, including interference that may cause undesired operation.

Warning (Part 15.21)

Changes or modifications not expressly approved by the party responsible for compliance could void the user's authority to operate the equipment.

Canada

Industry Canada Statement(s)

The term **IC** before the certification/registration number only signifies that the Industry Canada technical specifications were met.

Le terme « IC » précédant le numéro d'accréditation/inscription signifie simplement que le produit est conforme aux spécifications techniques d'Industry Canada.

Installation

Follow these guidelines:

- **Transport the FX-WRZ7860-0 Receiver in the original container to avoid vibration and shock damage to the receiver.**
- **Verify that all the parts shipped with the receiver.**

- **Do not drop the receiver or subject it to physical shock.**

Use the following procedure to mount, wire, and prepare the receiver for operation:

1. Mount the mounting base. See Location considerations.
2. Set the DIP switches. See Setup and adjustments.
3. Align the tabs on the edge of the mounting base with the slots on the edge of the receiver housing, and rotate the assembly onto its mounting base as illustrated in Figure 3.
4. Use a 1/16 in. (1.5 mm) Allen wrench or Johnson Controls T-4000-119 Allen-Head Adjustment Tool to tighten the tamper-resistant set screw and fasten the receiver enclosure to the mounting base.

   Note: To avoid damaging the unit, do not overtighten the set screw.
5. Connect the SA Bus cable from the controller to the FX-WRZ7860-0 Receiver. See Wiring.

Parts included

The following parts are included:

- **one FX-WRZ7860-0 Receiver with double-sided adhesive foam tape factory-installed on the back of the unit**
- **one installation instructions sheet**

Dimensions

Figure 1: FX-WRZ7860-0 Receiver physical features and dimensions, in./mm

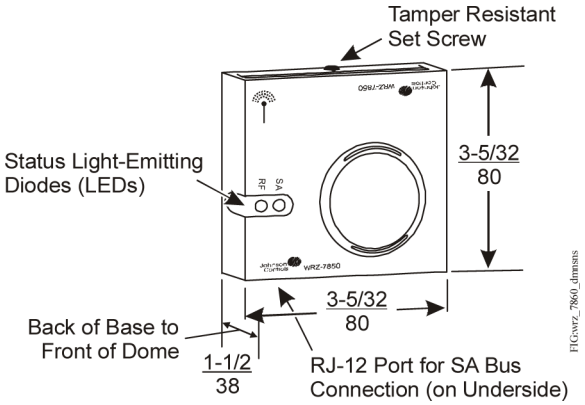

Mounting

Location considerations

Follow these guidelines when locating a FX-WRZ7860-0 Receiver:

- **Locate the receiver so that it is easily accessible within the proximity of the field controller, typically on a VAV duct, or just above or just below the ceiling tiles.**

Note: Communication cables of various lengths are available to connect the receiver SA Bus; see Table 3 for more details.

- **Locate the receiver up to 100 ft (30 m) from the FX-WRZ Series Wireless Room Sensor in a typical building environment.**
- **Locate the receiver near the center of the associated room sensor layout in multi-sensor applications.**
- **Locate the receiver on the same floor or building level as the associated room sensor.**
- **Locate the receiver in the direct line-of-sight with the room sensor whenever possible. Signal transmission is best if the path between the room sensor and receiver is as direct as possible. Line-of-sight is desirable but not required, as long as the path is not blocked by large metal objects.**
- **Mount the receiver so that the antenna symbol (shown on the cover near the LEDs) is in a vertical orientation, up or down. The antenna symbol indicates the approximate location of the receiver's internal onboard antenna.**

Figure 2: Correct mounting orientation

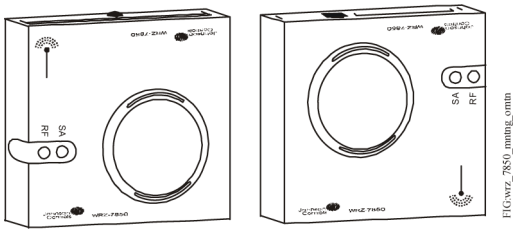

- **If the receiver is mounted on duct work, such as a VAV box, ideally the antenna portion of the receiver (approximately 1/3 of the enclosure) should hang below the duct work. Avoid having pipes, duct work, or other metal obstructions in the direct line-of-sight to the room sensor.**
- **Avoid large metal obstructions (including equipment rooms and elevator shafts) and concrete or brick walls between the receiver and the room sensor.**
- **Do not mount the receiver in recessed areas or shelving units.**

Wireless signal transmission considerations

Line-of-sight transmission ranges between a FX-WRZ Series Wireless Room Sensor and a FX-WRZ7860-0 Receiver can be less than the maximum distances shown in Table 1. The effective transmission range for indoor applications varies because of RF signal absorption and reflection due to metal obstructions, walls (or floors), and furniture found in typical building interiors.

Table 1: Indoor line-of-sight transmission ranges

Range type	Transmission distance
Practical Average	100 ft (30 m)
Maximum	150 ft (45 m)

Test the RF signal strength between an installed room sensor and receiver by using the manual occupancy override button on the FX-WRZ Series Wireless Room Sensor. Refer to the *FX-WRZ Series One-to-One Wireless Room Sensing Systems Technical Bulletin (LIT-12011663)* for more information on determining the signal strength between a FX-WRZ Series Wireless Room Sensor and a FX-WRZ7860-0 Receiver. If the RF signal path provides unsatisfactory results, a Johnson Controls

ZFR18xx Series Wireless Field Bus Router can be used as a repeater by locating it between the room sensor and the receiver.

Surface mounting the base with double-sided adhesive foam tape

The FX-WRZ7860-0 Receiver can be surface mounted using the double-sided adhesive foam tape factory-installed on the back of the unit.

To mount the receiver base using adhesive foam tape:

1. Remove the receiver housing from its mounting base as illustrated in Figure 3.

Figure 3: Removing the receiver housing from its mounting base

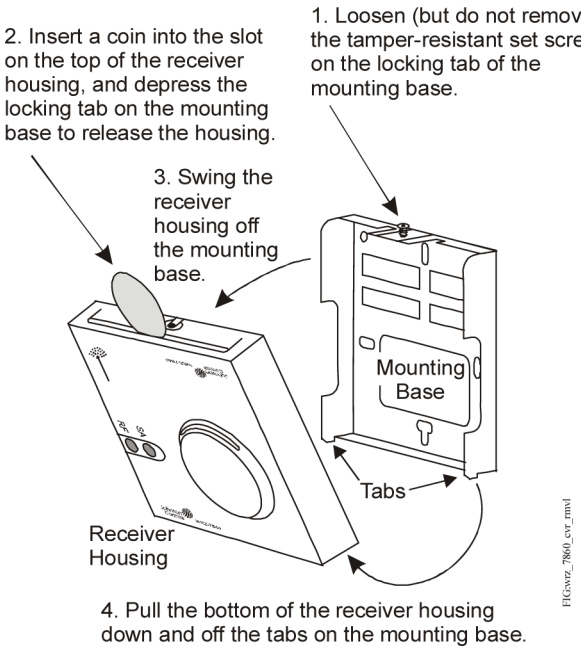

2. Peel off the protective paper from the adhesive foam tape on the back side of the mounting base.

3. Be sure that the base is oriented in the preferred mounting position (note where the set screw is; that is the antenna side), and press the base firmly onto the clean mounting surface.

Surface mounting the base with screws

Mount the FX-WRZ7860-0 Receiver:

- **to a wall, using two or more wall anchor molly bolts (furnished in the field)**
- **to a metal duct, such as a VAV box, using two or more sheet metal screws (furnished in the field)**

To mount the receiver base using screws:

1. Remove the receiver housing from its mounting base as illustrated in Figure 3.

2. Use the mounting base as a template and mark the location for the screw holes on the mounting surface as illustrated in Figure 4.

3. Drill a pilot hole at each of the marked locations. If mounting to a wall, install the molly anchors.

4. Secure the mounting base to the surface with the screws.

Figure 4: Mounting the receiver's mounting base with screws

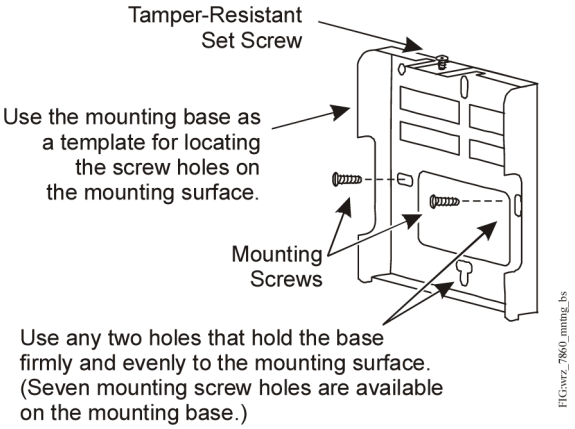

Wiring

The FX-WRZ7860-0 Receiver has a modular jack on the edge of the enclosure, opposite the side having the tamper-resistant set screw. This modular jack for the SA Bus requires a straight-through, One-to-One connection cable (not a crossover) to the **SENSOR** jack on an FX-PC Series Controller.

> **Important:**
>
> Configure the field controller as if connected to a wired network sensor. Configuring the field controller for use with a FX-WRZ Series Wireless Room Sensor causes incompatibility with the FX-WRZ7860-0 Receiver.

ⓘ **Note:** The SA Bus cable supplies power to the FX-WRZ7860-0 Receiver when the FX-PC Series Controller is powered on.

For more details on wiring the MS/TP Communication Bus, refer to the *FX-PC Series Controllers MS/TP Communications Bus Technical Bulletin (LIT-12011670).*

Setup and adjustments

Before reinstalling the FX-WRZ7860-0 Receiver to its mounting base, set the DIP switches (Figure 5) according to the job plans. When setting the DIP switches, be sure that the **AREA** and **TRANSMITTER I.D.** switches on the FX-WRZ7860-0 Receiver and the FX-WRZ Series Wireless Room Sensor are set to the same value.

Follow these steps:

1. Disconnect the SA Bus cable before setting the DIP switches.

2. Set the **AREA** and **TRANSMITTER I.D.** DIP switches.

Note: To use a FX-ZFR18xx Series Wireless Field Bus Router as a repeater, the **AREA** DIP switches and the most significant **TRANSMITTER I.D**. bit (128) on the FX-WRZ7860-0 Receiver must all be set to the **OFF** (0) position. The ZFR18xx Series Wireless Field Bus Router DIP switches are then set to the same address as the lower 7 bits of the **TRANSMITTER I.D.** on the FX-WRZ7860-0 Receiver.

3. Connect the SA Bus cable.
   Five seconds after the power is applied, the red LED flashes to indicate the firmware revision. For example, firmware revision 3 is indicated by the LED flashing three times during the startup process.

For each FX-WRZ7860-0 Receiver, record the following:

- **the AREA and TRANSMITTER I.D. DIP switch settings**
- **the location and/or identification of the FX-PC Series Controller to which the FX-WRZ7860-0 Receiver is connected by the SA Bus cable**

Use this information when adjusting the DIP switch settings of the FX-WRZ Series Wireless Room Sensor assigned to the FX-WRZ7860-0 Receiver and when associating the room sensor and receiver with the correct controller.

Figure 5: FX-WRZ7860-0 Receiver (Back view)

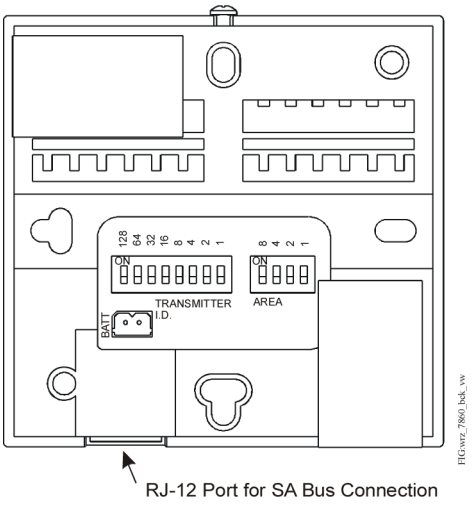

Refer to the *FX-WRZ Series One-to-One Wireless Room Sensing Systems Technical Bulletin (LIT-12011663)* for more information on determining the settings for the **AREA** and **TRANSMITTER I.D.** DIP switches for a FX-WRZ Series Wireless Room Sensor and a FX-WRZ7860-0 Receiver.

Troubleshooting

Use the Status LEDs illustrated in Figure 1 with the information included in Table 2 to troubleshoot the FX-WRZ7860-0 Receiver.

Repair information

If the FX-WRZ7860-0 Receiver fails to operate within its specifications, replace the unit. For a replacement receiver, contact the nearest Johnson Controls representative.

Table 2: Status LEDs

Name	Color	Normal	Descriptions
SA (Sensor Actuator) Bus	Green	Flickering	Flickering = SA Bus Activity
			Off Steady = No SA Bus Activity
RF (Wireless Signal Strength and Power Status)	Green/ Red Bi-color	Green – On (Blinks Signal Strength Every 60 Seconds[1])	Green = Good Room Sensor Battery 1 Blink = Marginal RF Signal Strength 2 Blinks = Good RF Signal Strength 3 Blinks = Excellent RF Signal Strength
			Red = Weak Room Sensor Battery

1 Pressing the occupancy override button on the associated FX-WRZ Series Wireless Room Sensor causes the RF LED on the FX-WRZ7860-0 Receiver to blink.

Accessories

Table 3: Accessories

Product Code Number	Description
FX-WRZMHN01-0	Wireless Room Temperature and Humidity Sensor with Passive Infrared (PIR) Occupancy Sensor, Battery Level/Signal Strength LED, Manual Occupancy Override Button, and No Display
FX-WRZMNN01-0	Wireless Room Sensor (No Temperature or Humidity Sensing) with PIR Occupancy Sensor, Battery Level/Signal Strength LED, Manual Occupancy Override Button, and No Display
FX-WRZMTB01-0	Wireless Room Temperature Sensor with PIR Occupancy Sensor, Display, Setpoint Dial Adjustment Scale: 13°C to 29°C (55°F to 85°F), °C/°F Button, and Manual Occupancy Override Button
FX-WRZMTJ01-0	Wireless Room Temperature Sensor, Display, Up/Down Setpoint Adjustment Buttons, °C/°F Button, and Manual Occupancy Override Button
FX-WRZMTN01-0	Wireless Room Temperature Sensor with PIR Occupancy Sensor, Battery Level/Signal Strength LED, Manual Occupancy Override Button, and No Display
FX-WRZRMT10K-0	Wireless Remote Temperature Transmitter, Display, °F/°C Button, and Manual Occupancy Override Button. For Use with TE-6300 Type II Temperature Sensors (Not Included)
FX-WRZSTR00-0 (Non-NISTCertified Model)	Wireless Refrigerator/Freezer Temperature Transmitter with Probe Assembly (Non-NIST Certified), Display, °F/°C Button, and Manual Occupancy Override Button
FX-WRZSTRNIST-0 (NIST Certified Model)	Wireless Refrigerator/Freezer Temperature Transmitter with Probe Assembly (NIST Certified), Display, °C/°F Button, and Manual Occupancy Override Button

Table 3: Accessories

Product Code Number	Description
FX-WRZTHB00-0	Wireless Room Temperature and Humidity Sensor with Display, Warmer/Cooler (+/-) Setpoint Dial Adjustment or Setpoint Dial Adjustment Scale: 13°C to 29°C (55°F to 85°F), °C/°F Button, RH Button, and Manual Occupancy Override Button
FX-WRZTHJ00-0	Temperature/Humidity Sensor with Display, Up/Down Setpoint Adjustment Buttons, °C/°F Button, Relative Humidity (RH) Button, and Occupancy Button
FX-WRZTHN00-0	Wireless Room Temperature and Humidity Sensor with Battery Level/Signal Strength LED, Manual Occupancy Override Button, and No Display
FX-WRZTHP00-0	Wireless Room Temperature and Humidity Sensor with Display, Warmer/Cooler (+/-) Setpoint Dial Adjustment, Battery Level/Signal Strength LED, and Manual Occupancy Override Button
FX-WRZTTB00-0	Wireless Room Temperature Sensor with Display, Warmer/Cooler (+/-) Setpoint Dial Adjustment, °F/°C Button, and Manual Occupancy Override Button
FX-WRZTTB00-5	Temperature Sensor with Display, Up/Down Setpoint Adjustment Buttons, and Occupancy Button. For Hospital Use.
FX-WRZTTD00-0	Wireless Room Temperature Sensor with Display, Warmer/Cooler (+/-) Setpoint Dial Adjustment, °C/°F Button, Fan Speed Control, and Manual Occupancy Override Button
FX-WRZTTJ00-0	Temperature Sensor with Display, Up/Down Setpoint Adjustment Buttons, °C/°F Button, and Occupancy Button
FX-WRZTTK00-0	Temperature Sensor with Display, Up/Down Setpoint Adjustment Buttons, °C/°F Button, Fan Speed Control Button, and Occupancy Button
FX-WRZTTP00-0	Wireless Room Temperature Sensor with Warmer/Cooler (+/-) Setpoint Dial Adjustment, Battery Level/Signal Strength LED, and Manual Occupancy Override Button
FX-WRZTTR00-0	Wireless Room Temperature Sensor with Battery Level/Signal Strength LED, Manual Occupancy Override Button, and No Setpoint Adjustment
FX-WRZTTS00-0	Wireless Room Temperature Sensor with Setpoint Dial Adjustment Scale: 13°C to 29°C (55°F to 85°F), Battery Level/Signal Strength LED, and Manual Occupancy Override Button
FX-WRZSST-120	Wireless Sensing System Tool: For Use with an FX-WRZ Series Sensor, to Function as a Site Survey Tool for the FX-WRZ7860 One-to-One Room Temperature Sensing System, or for the FX-ZFR18xx Series Wireless Field Bus System
T-4000-119	Allen-Head Adjustment Tool: 1/16 in. (1.6 mm), 30 Tools per Bag
CBL-NETWORK6-0	6 ft (1.8 m) SA Bus Interface Cable to Connect FX-WRZ7860-0 Receiver to FX-PC Series Controller
CBL-NETWORK25	25 ft (7.6 m) SA Bus Interface Cable to Connect FX-WRZ7860-0 Receiver to FX-PC Series Controller
CBL-NETWORK50	50 ft (15.2 m) SA Bus Interface Cable to Connect FX-WRZ7860-0 Receiver to FX-PC Series Controller

Table 3: Accessories

Product Code Number	Description
CBL-NETWORK75	75 ft (22.9 m) SA Bus Interface Cable to Connect FX-WRZ7860-0 Receiver to FX-PC Series Controller
CBL-NETWORK100	100 ft (30.5 m) SA Bus Interface Cable to Connect FX-WRZ7860-0 Receiver to FX-PC Series Controller
FX-ZFR1811-0	Wireless Field Bus Router
FX-ZFRRPT-0	Optional accessory for use with FX-ZFR1811 Router when used as a repeater. Includes 20 to 28 VAC or 16 to 30 VDC input power, 12 VDC output power supply (regulated at 500 mA maximum, 6 VA), and 101.6 mm x 101.6 mm (4 in. x 4 in.) electrical box with cover

Technical specifications

Table 4: FX-WRZ7860-0 Receiver for One-to-One Wireless Room Sensing Systems

Field Controller Interface	Power and SA Bus Interface between FX-WRZ7860-0 Receiver and FX-PC Series Controllers
Supply Voltage	Nominal 15 VDC via the SA Bus; 6.7 to 16.5 VDC Required
Current Consumption	10 mA Maximum
Addressing	DIP Switches, Field Adjustable for up to 4,096 Unique RF Addresses
Ambient Limits	**Operating:** 0°C to 50°C (32 to 122°F), 5% to 95% RH, Noncondensing **Storage:** -40°C to 71°C (-40°F to 160°F), 5% to 90% RH, Noncondensing
RF Band	Direct-Sequence, Spread-Spectrum, 2.4 GHz ISM Bands
Transmission Power	10 mW Maximum
Transmission Range	150 ft (45 m) Maximum Indoor Line of Sight; 100 ft (30 m) Practical Average Indoor
Receiver Outputs	One RJ-12 Port for SA Communication Bus Output (Sensed Zone Temperature and Humidity, Temperature Setpoint, and Occupancy Override Data)
Temperature Sensor Accuracy	**FX-WRZ Series Wireless Room Sensors (Temperature Only Models, and Temperature and Humidity Models):** 0.6C° (1.0F°) over the Range of 13°C to 29°C (55°F to 85°F); 0.9C° (1.5F°) over the Range of 0°C to 13°C (32°F to 55°F) and 29°C to 43°C (85°F to 110°F)
Temperature Sensor Type	**FX-WRZ Series Wireless Room Sensors (Temperature Only Models, and Temperature and Humidity Models):** Internal 10k ohm Negative Temperature Coefficient (NTC) Thermistor

Table 4: FX-WRZ7860-0 Receiver for One-to-One Wireless Room Sensing Systems

Humidity Measurement Range	**FX-WRZ Series Wireless Room Sensors (Temperature and Humidity Models):** Full Range 0% to 100% RH; Calibrated Range 10% to 90% RH at 23°C (73°F)
Humidity Sensor Accuracy	**FX-WRZ Series Wireless Room Sensors (Temperature and Humidity Models):** ±3% RH across the Range of 20% to 80% RH; ±6% RH across the Ranges of 10% to 20% RH and 80% to 90% RH (within the Temperature Range of 13°C to 29°C [55°F to 85°F])
Humidity Sensor Type	**FX-WRZ Series Wireless Room Sensors (Temperature and Humidity Models):** Planar Capacitive Polymer Sensor
PIR Occupancy Sensor Motion Detector	**FX-WRZ Series Wireless Room Sensors (PIR Occupancy Sensor Models):**Minimum 94 Angular Degrees up to a Distance of 15 ft (4.6 m) Based on a Clear Line of Sight
Materials	NEMA 1 White Plastic Housing; UL94-5VB and V-0 Plenum Flammability Rated
Compliance CE	**United States:** Transmission Complies with FCC Part 15.247 Regulations for Low Power Unlicensed Transmitters Transmitter FCC Identification: TBF-MATRIXL or OEJ-WRZRADIO
	Canada: Industry Canada IC:5969A-MATRIXL or 279A-WRZRADIO
	Europe: CE Mark – Johnson Controls declares that this product is in compliance with the essential requirements and other relevant provisions of the RED, EMC, LVD, and RoHS Directives.
	Japan: Transmission Complies with Article 38-24 Paragraph 1 of the Radio LawCertification Number: ATCB012834
	Australia and New Zealand: Australia/NZ Emissions Compliant (Regulatory Compliance Mark [RCM])
Shipping Weight	0.2 lb (0.09 kg)

The performance specifications are nominal and conform to acceptable industry standards. For application at conditions beyond these specifications, consult the local Johnson Controls office. Johnson Controls shall not be liable for damages resulting from misapplication or misuse of its products.

Points of single contact

APAC	Europe	NA/SA
JOHNSON CONTROLS C/O CONTROLS PRODUCT MANAGEMENT NO. 32 CHANGJIJANG RD NEW DISTRICT WUXI JIANGSU PROVINCE 214028 CHINA	JOHNSON CONTROLS WESTENDHOF 3 45143 ESSEN GERMANY	JOHNSON CONTROLS 507 E MICHIGAN ST MILWAUKEE WI 53202 USA

© 2019 Johnson Controls. All rights reserved. All specifications and other information shown were current as of document revision and are subject to change without notice.