GS3000 Gas Detection Sensor Series Product Bulletin

LIT-12013658

2021-04-21

Product description

The GS3000 Series of gas sensors monitor levels of carbon monoxide (CO) or nitrogen dioxide (NO_2) to provide an early warning of elevated concentrations.

The GS3000 is available as a standalone CO or NO_2 device as well as a CO and NO_2 dual sensor device. The dual sensor device is available in two configurations: CO and NO_2 housed in an enclosure or as CO with remote NO_2 sensor that you can mount at a higher location.

Figure 1: GS3000 Remote Gas Detector



Features and benefits

The GS3000 Gas Detection Sensor Series are encapsulated in field-replaceable sensor pods located on the bottom of the enclosure. The pod design provides a greater area of gas sampling than that of devices that use a single vent hole. Replacement pods come pre-calibrated and ready for installation.

The GS3000 Series is available with either analog or BACnet® outputs for communication with a building automation system. Standard features include an LCD display for configuration and local display as well as status LEDs. The GS3000 is housed in an IP65 polycarbonate enclosure with a hinged and gasketed cover that provides ease of installation and access for setup and configuration.

Features include:

- Two adjustable control or alarm relays
- Adjustable audible (buzzer) alarm
- Visual strobe alarm
- Temperature sensor variations

Dimensions

Figure 2: Dimensions of the GS3000 Gas Detection Sensor

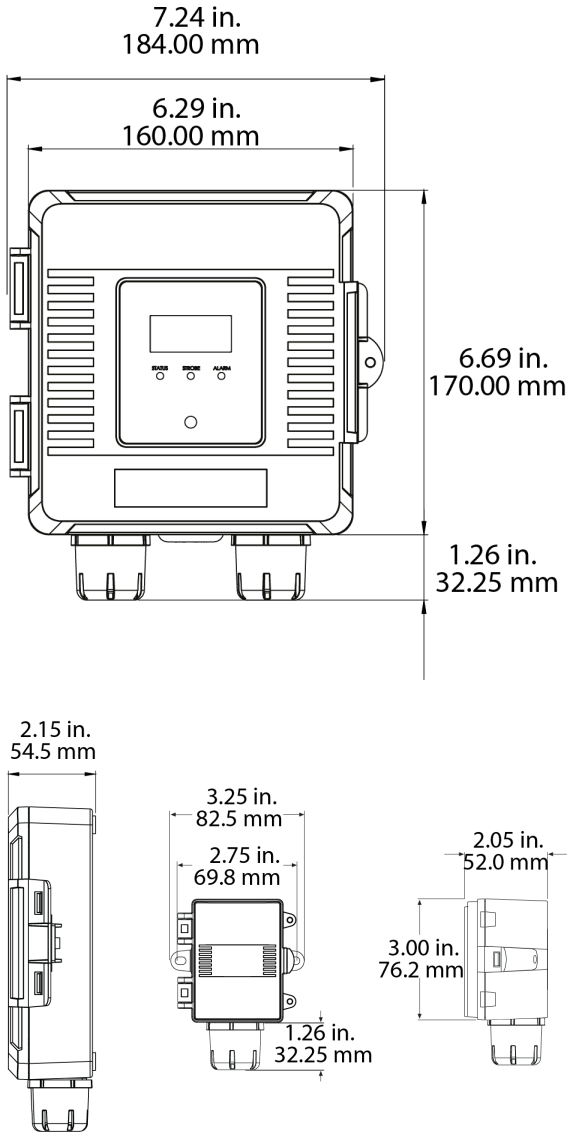

Wiring information

Table 1: GS3000 Gas Detection Sensor wiring information

Terminal designation	Function	Notes
PWR	24 VDC or 24 VAC	
COM	Common	
TEST	Digital input	
B+	BACnet output	Only on models with BACnet output
A-	BACnet output	
SHIELD	BACnet output	
CO	Analog output	Only on models with analog output and if feature ordered
TEMP	Analog output	
NO_2	Analog output	
RP	Remote NO_2sensor	Only on models with remote NO_2 sensor
RC	Remote NO_2 sensor	
CSLP	Remote NO_2 sensor	
SCLM	Remote NO_2 sensor	
SDAP	Remote NO_2 sensor	
SDAM	Remote NO_2 sensor	
RT+	Resistive output	Only on models with 1K platinum or 1K nickel temperature sensors
RT-	Resistive output	
NC1	Relay output	
COM1	Relay output	
NO1	Relay output	
NC2	Relay output	
COM2	Relay output	
NO2	Relay output	

Figure 3: GS3000 Gas Detection Sensor wiring information

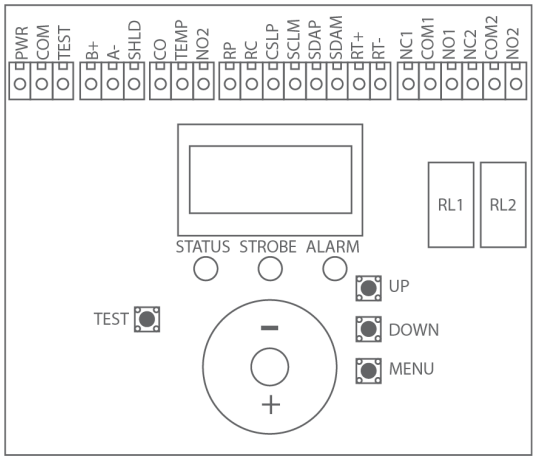

Ordering information

Table 2: Selection chart

Specification	Description	
Product code	**GS3XX**	Gas sensor
Gas sensor	**00**	CO
	01	NO_2
	02	CO and NO_2 combination
Mounting	**WMX**	Wall mount
	WMR	Wall mount remote detector
Output	**B**	BACnet
	I	Current: 4 mA to 20 mA
	V	Voltage: 0 VDC to 5 VDC or 0 VDC to 10VDC
Temperature sensor	**R2**	Two adjustable relays
	A	Analog or BACnet
	P	1K ohm platinum
	N	1K ohm nickel

Note: Temperature sensor selection:

- If you select BACnet (B) as device output, temperature sensor is only available as BACnet
- If you select analog (I or V) as device output, temperature sensor is available as a 1K platinum, 1K nickel, or analog output

Table 3: Replacement sensor pods

Product code	Gas	Temperature sensor
GS3RWMX00A	CO	Analog
GS3RWMX00P	CO	1K ohm platinum
GS3RWMX00N	CO	1K ohm nickel
GS3RWMX01A	NO_2	Analog
GS3RWMX01P	NO_2	1K ohm platinum
GS3RWMX01N	NO_2	1K ohm nickel

Technical specifications

Table 4: GS3000 Gas Detection Sensor Series technical specifications

Specification	Description
Carbon monoxide	**Measurement:** Electrochemical
	Accuracy: ±5 ppm or ±5% of reading, whichever is greater
	Measurement range: 0 ppm to 100 ppm, 0ppm to 150 ppm, 0 ppm to 300 ppm, 0 ppm to 400 ppm, or 0 ppm to 500 ppm, field-selectable
	Response time: <30 seconds
	Reproducibility: ±2%, same day
	Long term drift: <5% per year
	Expected lifespan: 5 to 7 years in air
Nitrogen dioxide	**Measurement:** Electrochemical
	Accuracy: ±0.2 ppm or ±5% of reading, whichever is greater
	Measurement range: 0 ppm to 10 ppm
	Response time: <30 seconds
	Reproducibility: ±2%, same day
	Long term drift: Zero: < ±2 ppm per year Span: < 2% signal per month
	Expected lifespan: >2 years
Sensor coverage area	7500 ft^2 (700 m^2) or 50 ft (15 m) radius
Temperature sensor	**Sensor:** 1K ohm platinum, 1K ohm nickel, analog, or BACnet **Range:** -4°F to 122°F (-20°C to 50°C) , -32°F to 122°F (0°C to 50°C)
Relay outputs	**Contact ratings:** Form C (NO + NC), 5 A at 140 VAC, 5 A at 30 VDC **Relay setpoint + hysteresis:** programmable through the menu **Relay time delay:** programmable through the menu
LCD	**Size (H x W):** 0.6 in. x 1.4 in. (1.5 cm x 3.5 cm), alpha-numeric 2-line x 8 characters **Backlight:** enable or disable through the menu
LED indicators	Red or green status Red alarm
Power supply	24 VDC ±20% or 24 VAC ±10%, non-isolated half-wave rectified
Output signals	4 mA to 20 mA active (sourcing) or 0 VDC to 5 VDC, 0 VDC to 10 VDC, BACnet
Output drive capability	**Current:** 550 ohm maximum **Voltage:** 10K ohm minimum
Protection circuitry	Reverse voltage-protected, overvoltage protected
Wiring connections	Screw terminal block, 14 AWG to 22 AWG
Ambient operating range	-4°F to 122°F (-20°C to 50°C), 15% RH to 90 % RH noncondensing, 0.9 atm to 1.1 atm
Storage conditions	-22°F to 140°F (-30°C to 60°C)
Enclosure	IP65 with security screw installed, UL94-V0
Dimensions (H x W x D)	**Main enclosure:** 8 in. x 7.24 in. x 2.15 in. (202.3mm x 184mm x 54.3mm) **Remote NO_2 enclosure:** 4.31 in. x 3.28 in. x 2.05 in. (109.5mm x 83.3mm x 52mm)
Country of origin	Canada
Compliance	Manufactured in an ISO 9001 Registered Quality System
CE	**Europe:** CE Mark - Johnson Controls declares that this product is in Compliance with the essential requirements and other relevant provisions of the EMC Directive.

The performance specifications are nominal and conform to acceptable industry standards. For application at conditions beyond these specifications, consult the local Johnson Controls office. Johnson Controls shall not be liable for damages resulting from misapplication or misuse of its products.

Product warranty

This product is covered by a limited warranty, details of which can be found at www.johnsoncontrols.com/buildingswarranty.

Software terms

Use of the software that is in (or constitutes) this product, or access to the cloud, or hosted services applicable to this product, if any, is subject to applicable end-user license, open-source software information, and other terms set forth at www.johnsoncontrols.com/techterms. Your use of this product constitutes an agreement to such terms.

Patents

Patents: https://jcipat.com

Single point of contact

APAC	Europe	NA/SA
JOHNSON CONTROLS	JOHNSON CONTROLS	JOHNSON CONTROLS
C/O CONTROLS PRODUCT MANAGEMENT	WESTENDHOF 3	507 E MICHIGAN ST
NO. 32 CHANGJIJANG RD NEW DISTRICT	45143 ESSEN	MILWAUKEE WI 53202
WUXI JIANGSU PROVINCE 214028	GERMANY	USA
CHINA		

Contact information

Contact your local branch office: www.johnsoncontrols.com/locations
Contact Johnson Controls: www.johnsoncontrols.com/contact-us

© 2021 Johnson Controls. All rights reserved. All specifications and other information shown were current as of document revision and are subject to change without notice.