HE-69xx0NP Duct Probe Humidity Element with Temperature Sensor Installation Guide

Part No. 24-11025-00013 Rev. A

2020-01-21

Installation

Important: Only use this TE-6300P Humidity Element with Temperature Sensor as an operating control. Where failure or malfunction of the humidity element with temperature sensor could lead to personal injury or property damage to the controlled equipment or other property, additional precautions must be designed into the control system. Incorporate and maintain other devices, such as supervisory or alarm systems or safety or limit controls, intended to warn of or protect against failure or malfunction of the humidity element with temperature sensor.

Important: Utiliser ce TE-6300P Humidity Element with Temperature Sensor uniquement en tant que dispositif de contrôle de fonctionnement. Lorsqu'une défaillance ou un dysfonctionnement du humidity element with temperature sensor risque de provoquer des blessures ou d'endommager l'équipement contrôlé ou un autre équipement, la conception du système de contrôle doit intégrer des dispositifs de protection supplémentaires. Veiller dans ce cas à intégrer de façon permanente d'autres dispositifs, tels que des systèmes de supervision ou d'alarme, ou des dispositifs de sécurité ou de limitation, ayant une fonction d'avertissement ou de protection en cas de défaillance ou de dysfonctionnement du humidity element with temperature sensor.

Location requirements

Important: To avoid damage to the circuit board and components, do not mount the unit in a location where high concentrations of corrosive vapors are present.

Place the Duct Probe Humidity Element in a location that complies with these guidelines:

- Position: designed for duct mounting in any position, except with the probe tip pointed up.
- Duct diameter: the minimum diameter for round ducts is 12 in. (305 mm) and the minimum width for square ducts is 12 in. (305 mm).
- For air stratification, when the unit is mounted on the discharge side of the fan, ensure that the location is at least 8 ft (2.4 m) downstream from the humidification equipment, where duct air and water vapor are sufficiently mixed. Avoid areas where the probe is exposed to condensation.

Application setup

Before installation, configure the element for the required output signal. See Figure 1 to set the output jumper for the application.

Figure 1: Output jumper setting

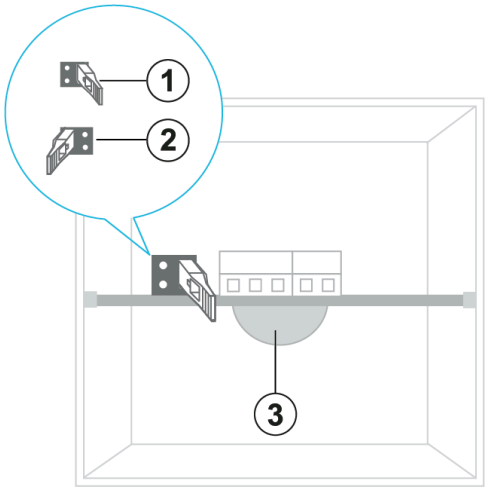

Table 1: Output jumper setting

Number	Description
1	0 VDC to 5 VDC
2	0 VDC to 10 VDC
3	Probe

Note: The factory setting is No. 2.

Parts included

- Duct Probe Humidity Element
- Two 8 in. x 1 in. Phillips-head sheet metal screw
- Washer for use with conduit fitting

Tools required

- Hole saw with 1 in. (25 mm) diameter blade
- Drill with 1/8 in. (3 mm) drill bit
- No. 2 Phillips screwdriver
- Gasket, sealer, or other materials to seal the area between the unit and the duct
- Pliers

Mounting

Before you begin:
To mount the Duct Probe Humidity Element, see Figure 2 and follow Steps 1 to 7.

Figure 2: Duct Probe Humidity Element

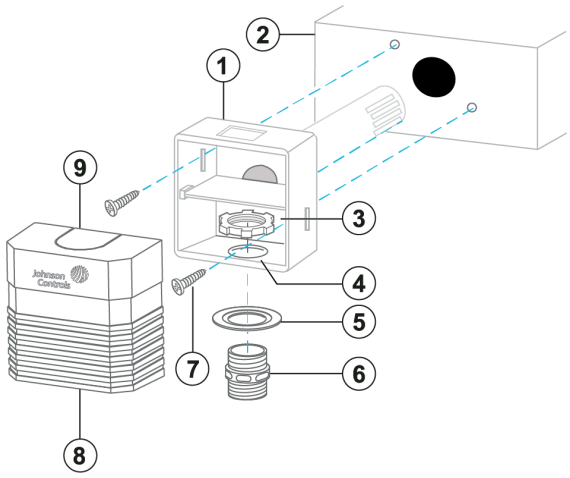

Table 2: Duct Probe Humidity Element assembly and mounting

Number	Description
1	Housing
2	Duct
3	Nut for conduit fitting
4	Conduit hole
5	Washer
6	Conduit fitting
7	Snap-on cover
8	Conduit knockout
9	Housing

1. Remove any excess insulation from the duct that prevents the probe from extending a minimum of 3 in. (76 mm) into the air stream.
2. Use the hole saw to make a 1 in. (25.4 mm) hole in the duct to insert the probe.
3. Remove the plastic cover from the housing.
4. Insert the probe into the duct, and use the housing as a template to mark the location of the holes for the mounting screws.

Important: Remove the unit before drilling to prevent any metal remnants from falling onto the circuit board.

5. Remove the unit, and drill a 1/8 in. (3 mm) hole for each mounting screw.
6. Use a gasket, sealer, or other means to seal the area around the 1 in. (25.4 mm) hole between the unit and the duct.
7. Reinsert the probe, and secure the housing to the duct using the two No. 8 screws provided.

What to do next:

Important: Seal any holes created during installation to help reduce drafts and for more accurate humidity readings.

Wiring

Before you begin:

WARNING: Risk of electric shock. Disconnect the power supply before making electrical connections. Contact with components carrying hazardous voltage can cause electric shock and result in severe personal injury or death.

AVERTISSEMENT: Risque de décharge électrique. Débrancher l'alimentation avant de réaliser tout branchement électrique. Tout contact avec des composants conducteurs de tensions dangereuses risque d'entraîner une décharge électrique et de provoquer des blessures graves, voire mortelles.

About this task:
For wiring, follow these guidelines:

- Do not run low voltage wiring in the same conduit as line voltage wiring or other conductors that supply highly inductive loads.
- Use 18 AWG or 24 AWG wire.
- Make all wiring connections in accordance with the National Electrical Code and all local regulations.

To wire a Duct Probe model, complete the following steps:

1. Route the wires from the controller to the unit through the conduit hole in the housing.

   Important: If you use a conduit fitting (not provided), a washer is provided to support the fitting in the housing. If you do not use the washer, the fitting could stress the plastic housing.

2. Break out the conduit knockout from the cover with pliers to accommodate the wiring. See Figure 2.
3. Connect the wires to the appropriate terminals of the wiring block. See Figure 3.
4. Press the cover onto the base.

Figure 3: Wiring the Duct Probe Humidity Element

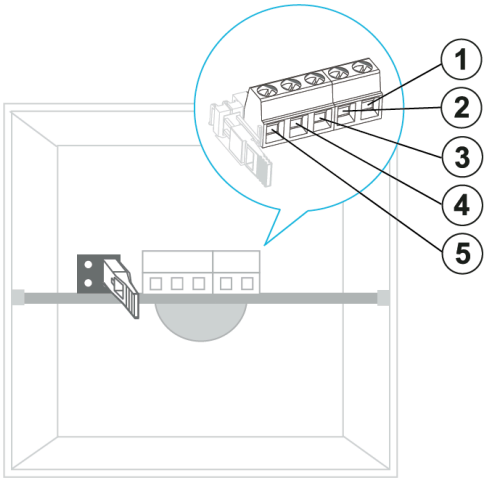

Table 3: Wiring the Duct Probe Humidity Element

Number	Description
1	TEMP
2	TEMP
3	VOUT
4	COM
5	PWR

Troubleshooting

Before you begin:
If the Duct Probe Humidity element does not function correctly:

1. Verify that the unit is mounted in a location that is away from drafts, moisture, and sunlight.
2. Use a humidity tester with accuracy greater than the accuracy of the element, such as an optical dew point hygrometer, to determine the percent of relative humidity (RH). Make sure that the accuracy of the tester is ±2% between 20% and 80% for 2% models, and ±3% between 20% and 80% for 3% models.

   Note: The humidity tester and the element must sense the air at the same temperature. Before testing, wait 30 to 60 minutes for the tester to stabilize to ambient temperature and humidity. A temperature difference of as little as 1°F (0.6°C) can cause a difference in measured RH of over 2.5% RH.

3. Calculate the percent of RH indicated by the element as follows:
   a. For 0 VDC to 10 VDC output, multiply the output voltage by 10. For example: 7.5 VDC x 10 = 75% RH
   b. For 0 VDC to 5 VDC output, multiply the output voltage by 20. For example: 3.5 VDC x 20 = 70% RH

   Note: ±0.9°F (±0.5°C) corresponds to an error of about ±2% RH at 25°C if RH is at a high level, for example: 70%.

4. Compare the RH readings between the humidity tester and the element. If the difference is more than the sum of the acceptable errors, replace the humidity element.
5. If the humidity output is lower than expected, check the position of the output jumper setting.

Technical specifications

Table 4: TE-6300P Series

Product	TE-6300P Series Duct Probe Humidity Element with Temperature Sensor		
Power requirements	12 VDC to 30 VDC or 18 VAC to 30 VAC at 50/60 Hz, Class 2		
Current draw	DC supply		5 mA excluding load
	AC supply		14 mA excluding load
Acceptable wire gauge	16 AWG to 24 AWG wire; 18 AWG wire preferred		
Humidity element at 77°F (25°C)	Signal	0 VDC to 5 VDC or 0 VDC to 10 VDC, 1K ohm maximum load	
	Accuracy	**HE-69x2**	±2% RH for 20% to 80% RH at 77°F (25°C)
			±4% RH for 10% to 20% and 80% to 90% RH at 77°F (25°C)
		HE-69x3	±3% RH for 20% to 80% RH at 77°F (25°C)
			±5% RH for 10% to 20% and 80% to 90% RH at 77°F (25°C)
	Temperature coefficient	-0.03% RH/°C	
Temperature sensors	Thin film nickel	Accuracy	±0.34°F (0.18°C) at 70°F (21°C)
		Reference resistance	1K ohm at 70°F (21°C)
		Resistance change	Approximately 3 ohm/°F (5 ohm/°C)
	Silicon	Accuracy	±1°F (0.6°C) at 70°F (21°C)
		Reference resistance	1,035 ohm at 77°F (25°C)
		Resistance change	Approximately 4 ohm/°F (8 ohm/°C)
	Thin film platinum	Accuracy	±0.65°F at 70°F (±0.36°C at 21°C)
		Reference resistance	1K ohm at 32°F (0°C)
		Resistance change	Approximately 2 ohm/°F (4 ohm/°C)
Electrical connections	3-position and 2-position screw terminal blocks		
Ambient operating conditions	32°F to 140°F (0°C to 60°C)		
	0% to 100% RH, 85°F (29.4°C) maximum dew point		
Survival operating conditions	-40°F to 140°F (-40°C to 60°C)		
	0% to 100% RH, 85°F (29.4°C) maximum dew point		
Materials	Blue plastic cover with blue plastic housing and probe		
Dimensions	Duct probe (H x W x D)		3.28 in. x 3.25 in. x 8.27 in. (83 mm x 83 mm x 210 mm)
	Probe (L x D)		6.25 in. x 0.98 in. (159 mm x 25 mm)
Shipping weight	0.6 lb (0.3 kg)		
Compliance	United States		UL Listed, CCN XAPX, File E27734; to UL 60730-1; and IEC 60730-2-13. Plenum Rated (UL 2043)
	Canada		cUL Listed, CCN XAPX7, File E27734; to CAN/CSA E60730-1; and CAN/CSAE60730-2-13
CE	Europe		CE Mark - Johnson Controls declares that this product is in compliance with the essential requirements and other relevant provisions of the EMC Directive.
	Australia and New Zealand		RCM Mark, Australia/NZ Emissions Compliant

Product warranty

This product is covered by a limited warranty, details of which can be found at www.johnsoncontrols.com/buildingswarranty.

Software terms

Use of the software that is in (or constitutes) this product, or access to the cloud, or hosted services applicable to this product, if any, is subject to applicable end-user license, open-source software information, and other terms set forth at www.johnsoncontrols.com/techterms. Your use of this product constitutes an agreement to such terms.

Patents

Patents: https://jcipat.com

Single point of contact

APAC	EU	UK	NA/SA
JOHNSON CONTROLS C/O CONTROLS PRODUCT MANAGEMENT NO. 32 CHANGJIANG RD NEW DISTRICT WUXI JIANGSU PROVINCE 214028 CHINA	JOHNSON CONTROLS VOLTAWEG 20 6101 XK ECHT THE NETHERLANDS	JOHNSON CONTROLS TYCO PARK GRIMSHAW LANE MANCHESTER M40 2WL UNITED KINGDOM	JOHNSON CONTROLS 5757 N GREEN BAY AVE. GLENDALE, WI 53209 USA

Contact information

Contact your local Johnson Controls representative: www.johnsoncontrols.com/locations
Contact Johnson Controls: www.johnsoncontrols.com/contact-us