Code No. LIT-1922435
Issued November 18, 2008

P352AB

Electronic On/Off Pressure Control

Description

The P352AB Electronic On/Off Pressure Control features SPDT relay output and LED indication. This control is used in conjunction with a pressure transducer and wiring harness. The pressure range is 0 to 600 psig with adjustable differential and offset ranges.

The P352AB control can be used as a standalone device or in conjunction with accessory modules to control a wide variety of single and multi-stage HVAC and refrigeration applications.

The Y350 Power Module, S352 Stage Module, and D352 Display Module can be used with the P352AB.

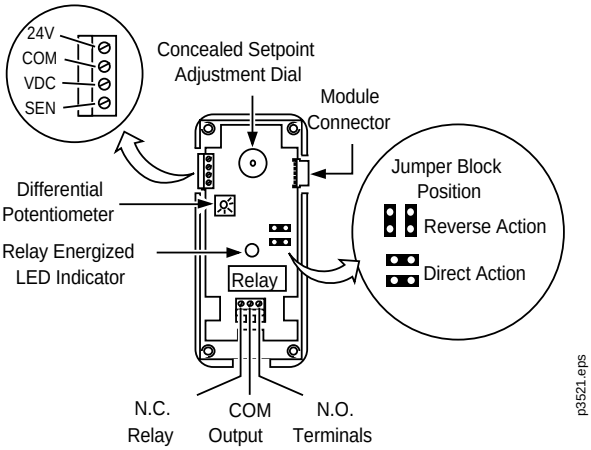

Interior of P352



P352

Features

- field selectable reverse/direct acting mode
- adjustable setpoint, differential, and offset capabilities
- wall or DIN rail mounting
- stage (S352), display (D352), and power (Y350R) modules plug-together via 5-pin connectors

Applications

- condenser fan cycling
- compressor unloading
- high pressure indication

Selection Chart

Code Number	Output	Pressure Range (psig)	Differential (psi)	Pressure Transducer and Cable	Display
P352AB-2C	SPDT Relay	0 to 100	2 to 50	P499RAP-101K or P499RCP-101K	D352AA-2C
P352AB-3C		90 to 250	10 to 100	P499RAP-105K or P499RCP-105K	
P352AB-4C		240 to 600		P499RAP-107K or P499RCP-107K	

Technical Specifications

P352AB Electronic On/Off Pressure Control		
Supply Voltage [1]	**Transformer**	20 to 30 VAC, 50/60 Hz, Class 2
	Y350R	120/240 VAC, 50/60 Hz
Power Consumption		2.3 VA Maximum
DC Power Supply	**P352AB-2C** **P352AB-3C** **P352AB-4C**	5 VDC provided to pressure transducer
Relay		SPDT enclosed relay, contacts rated at 10 amp non-inductive 1/2 hp 120/240 VAC
Case and Cover Material		NEMA 1, high-impact thermoplastic
Ambient Temperature	**Operating**	-30 to 150°F (-34 to 66°C)
	Shipping	-40 to 185°F (-40 to 85°C)
Ambient Humidity		0 to 95% RH non-condensing

1. Only one input voltage source may be used.

Relay Contact Ratings

Voltage AC	120	208/240
Full Load Amp	9.8	4.9
Locked Rotor Amp	58.8	29.4
Non-Inductive Amp 10 at 24/240 VAC		
Pilot Duty – 125 VA at 24/240 VAC		

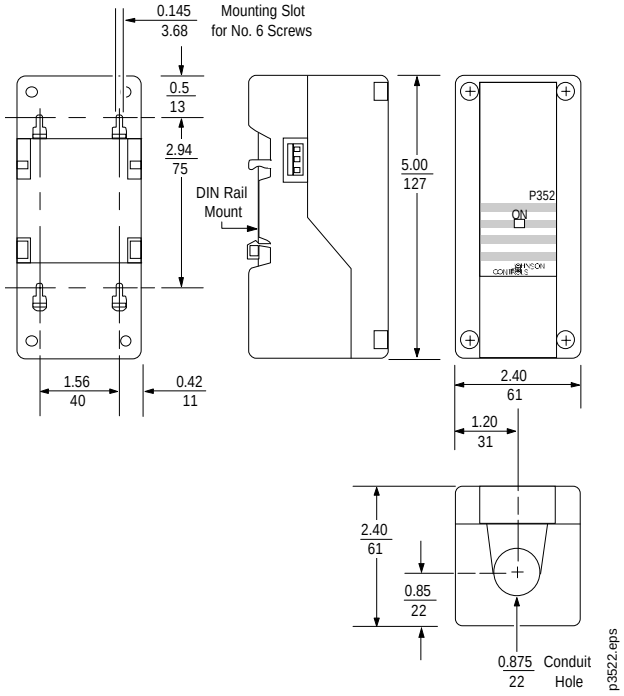

P352 Dimensions, in. (mm)

The performance specifications are nominal and conform to acceptable industry standards. For applications at conditions beyond these specifications, consult the local Johnson Controls office. Johnson Controls, Inc. shall not be liable for damages resulting from misapplication or misuse of its products. © 2008 Johnson Controls, Inc.
www.johnsoncontrols.com