P70, P72, and P170 Series Controls for Low Pressure Applications Installation Guide

Part No. 24-7664-1601 Rev. J

2026-04-28

Application

P70, P72, and P170 Series Controls for Low Pressure Applications provide low-side pressure control on commercial refrigeration and air conditioning applications.

Important: Use this P70, P72, and P170 Series control only as an operating control. Where failure or malfunction of the P70, P72, or P170 pressure control could lead to personal injury or property damage to the controlled equipment or other property, additional precautions must be designed into the control system. Incorporate and maintain other devices, such as supervisory or alarm systems or safety or limit controls, intended to warn of or protect against failure or malfunction of the P70, P72, or P170 pressure control.

P70A and P170A type models with single-pole, single-throw (SPST) open-low switch action are the most popular models and are typically used for open-low operation and pump-down control. See Selection chart.

P70 and P170 Series control models are also available with SPST open-high switch action and are typically used for capacity control. See Table 3 and Table 4. Control models with single-pole, double-throw (SPDT) or 4-wire, 2-circuit switch action allow users to install alarm devices or other control circuits. See Table 4.

P72 Series control models have a double-pole, single-throw (DPST) switch with load-carrying contacts that provide direct control of 120/600 VAC single-phase motors and 208/240 VAC 3-phase. See Table 4.

These controls are available in several pressure ranges and are compatible with most common refrigerants. They may also be used on air, water, and other non-corrosive fluid applications. Ammonia-compatible models are also available. See Table 3.

The MICRO-SET® option provides fine adjustment of the differential setting for precision pressure control of critical low pressure applications.

Some models feature limited knob adjustment, which restricts adjustment of the pressure settings and deters over-adjustment or tampering. See Adjusting the limit knob.

The manual reset lockout mechanism prevents the pressure control from resetting automatically after the control reaches the cut out setpoint, and provides shutdown capability for unmonitored equipment. See Performing a manual reset.

Type 1 (NEMA) enclosures are standard on most models.

Selection chart

The following tables list the standard models and features of P70, P72, and P170 controls for low pressure applications. These standard models are available through most authorized Johnson Controls/PENN distributors.

© 2026 Johnson Controls. All rights reserved.

Table 1: Standard MICRO-SET P70, P72, and P170 control models for low pressure applications for non-corrosive refrigerants

Model Number	Switch Action	Range in. Hg to psig (kPa)	Differential psi (kPa)	Pressure Connection	Maximum Overpressure psig (kPa)
P70AB-12C	SPST Open-Low	12 in. Hg to 80 psig (-41 to 551 kPa)	Minimum 5 (34) Maximum 35 (241)	36 in. Cap. with 1/4 in. Flare Nut	325 (2,241)
P170AB-12C				1/4 in. Male Flare Connector	

Table 2: Standard P70, P72, and P170 control models for low pressure applications for non-corrosive refrigerants

Model Number	Switch Action	Range in. Hg to psig (kPa)	Differential psi (kPa)	Pressure Connection	Maximum Overpressure psig (kPa)
P70AA-2C	SPST Opens-Low	0 to 150 psig (0 to 1,034 kPa)	Adjustable 10 to 70 (69 to 483)	36 in. Capillary with 1/4 in. Flare Nut	325 (2,241)
P170AA-2C				1/4 in. Male Flare Connector	

Table 3: Standard ammonia compatible all-range P70, P72, and P170 controls for low pressure applications

Model Number	Switch Action	Range in. Hg to psig (kPa)	Differential psi (kPa)	Pressure Connection	Maximum Overpressure psig (kPa)
P70AA-5C	SPST Open-Low	20 in. Hg to 100 psig (-68 to 690 kPa)	Minimum 7 (48) Maximum 50 (345)	1/4 in. SS Female NPT	325 (2,241)
P70CA-4C	SPST Open-High				
P70EA-9C	SPDT 1 to 3: Open high 1 to 2: Close high		Fixed 5 (34)		

Table 4: Standard P70, P72, and P170 all-range controls for low pressure applications for non-corrosive refrigerants

Model Number	Switch Action	Range in. Hg to psig (kPa)	Differential psi (kPa)	Pressure Connection	Maximum Overpressure psig (kPa)
P70AB-2C	SPST Open-Low	20 in. Hg to 100 psig (-68 to 690 kPa)	Minimum 7 (48) Maximum 50 (345)	36 in. Cap. with 1/4 in. Flare Nut	325 (2,241)
P70CA-1C	SPST Open-High			36 in. Cap. with 1/4 in. Flare Nut	
P170AB-2C	SPST Open-Low		Minimum 7 (48) Maximum 50 (345)	1/4 in. Male Flare Connector	
P170CA-1C	SPST Open-High				

© 2026 Johnson Controls. All rights reserved.

Functionality

Table 5: Functionality

Model	Function	Setpoint – Adjustable / Fixed	Contact configuration – Reset Action (Manual/Auto)	Action Type Description
P70EA, P170EA	Operating	Adjustable	SPDT – auto	2.B.L for all ratings other than 600 V; 2.C.L for 600 V
P70A, P170A / P72A single pressure control	Operating	Adjustable ⓘ **Note:** Use the high pressure cut out only at the factory-set trip value	SPST / DPST N.C. contacts open Low Pressure – Auto reset	2.B.L for all ratings other than 600 V; 2.C.L for 600 V
P70B, P170B single pressure control	Operating		SPST N.C. contacts open Low Pressure – Manual reset	2.B.L.D.J for all ratings other than 600 V; 2.C.L.D.J for 600 V
P70C, P170C / P72C single pressure control	Operating or cut out ⓘ **Note:** Use the high pressure cut out only at the factory-set trip value		SPST / DPST N.C. contacts open High Pressure – Auto reset	2.B.L for all ratings other than 600 V; 2.C.L for 600 V
P70G, P170G single pressure control	Operating		SPST N.C. contacts L–M2 open Low Pressure – Auto reset	2.B.L for all ratings other than 600 V; 2.C.L for 600 V
			SPST N.O. contacts L–M1 close Low Pressure – Auto reset	2.C.L

Dimensions

The dimensions are nominal and are subject to accepted manufacturing tolerances and application variables.

© 2026 Johnson Controls. All rights reserved.

Figure 1: Dimensions of P70, P72, and P170 pressure controls with Type 1 (NEMA) enclosures, in. (mm)

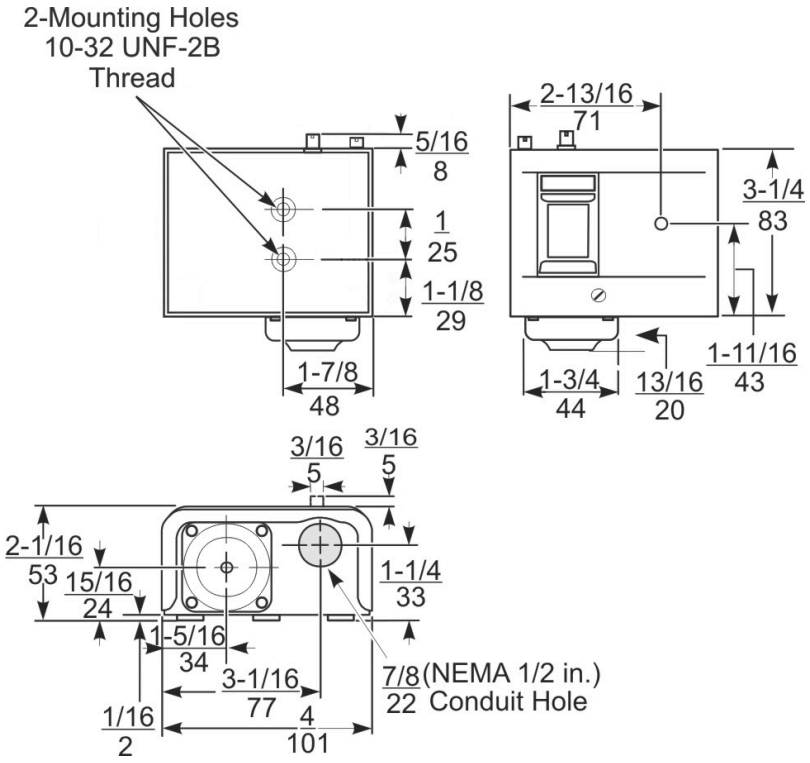

Mounting

CAUTION

Risk of Property Damage

Mount the pressure control separately from the electrical cabinet and seal all electrical piping to prevent ammonia from migrating to electrical components. Where there may be exposure to ammonia, use only ammonia-compatible control modules and pressure connections. System shutdown due to improper adjustment may cause property damage.

CAUTION

Risk of Property Damage

Mount the P70, P72, or P170 Pressure Control according to the instructions and guidelines included with the control. These instructions and guidelines are intended to reduce the risk of malfunction of the product and resulting property damage. Failure to follow these instructions and guidelines could cause the control to malfunction, resulting in property damage.

Important: Use only the mounting screws supplied with the mounting bracket to avoid damaging internal components. Be careful not to distort or bend the control case when mounting the control to an uneven surface. Using other screws or bending the control case will void the warranty.

© 2026 Johnson Controls. All rights reserved.

When you install the control, adhere to the following guidelines:

- Mount the control in an accessible position, where the control and pressure-connection lines are not subject to damage.
- Mount the pressure control upright and level.
- Position the pressure-connection lines to allow drainage away from the control bellows.
- Position the pressure-tap points on the top side of the refrigerant lines to reduce the possibility of oil, liquids, or sediment accumulating in the bellows, which could cause the control to malfunction.
- Mount controls with Type 1 (NEMA) enclosures on horizontal or vertical flat surfaces.
- Use the two supplied screws with the threaded holes at the back of the control to mount the control to the appropriate bracket for your surface.

Figure 2: Mounting a control on a horizontal surface with BKT38A-6xxR

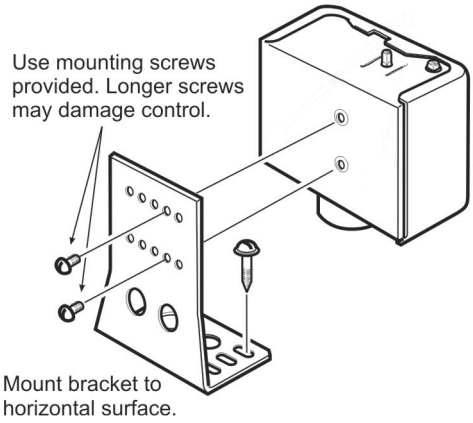

Figure 3: Mounting a control on a vertical surface with BKT40A-6xxR

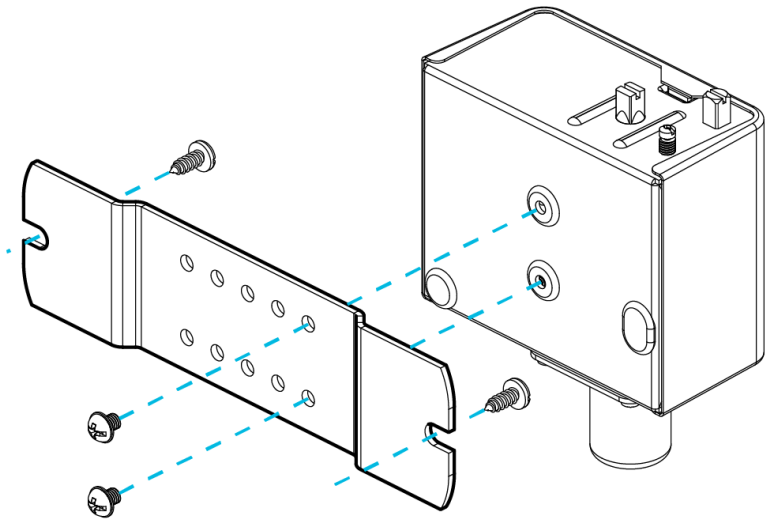

© 2026 Johnson Controls. All rights reserved.

Wiring

⚠ WARNING

Risk of Electric Shock

Disconnect or isolate all power supplies before making electrical connections. More than one disconnect or isolation may be required to completely de-energize equipment. Contact with components carrying hazardous voltage can cause electric shock and may result in severe personal injury or death.

- **Important:** Use copper conductors only. Make all wiring connections in accordance with local, national, and regional regulations. Do not exceed the P70, P72, or P170 Pressure Control electrical ratings.
- **Important:** Use the included terminal screws in the switch block. If you use other terminal screws, you void the warranty and could damage the switch.

P70, P72, and P170 controls for low pressure applications are available with several switch options and electrical ratings. Check the label inside the control cover for the model number, switch action, and electrical rating. Check the wiring terminal designations on the control switch block, and see the following guidelines and applicable wiring diagrams, when wiring the control. For switch actions and models, see Table 6.

Figure 4: Standard wiring for an SPST switch

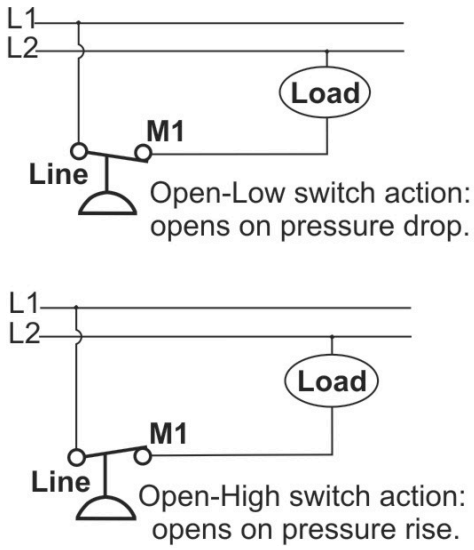

© 2026 Johnson Controls. All rights reserved.

Figure 5: Standard wiring for a SPDT switch

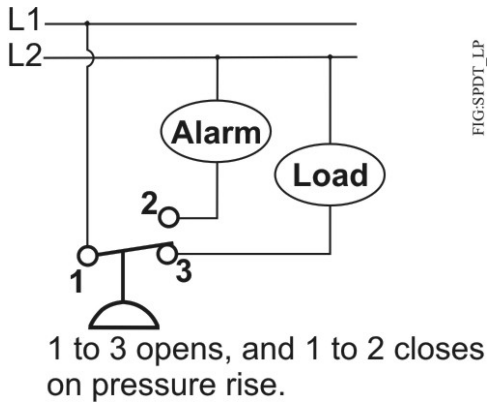

Figure 6: Standard wiring for a four-wire two-circuit switch

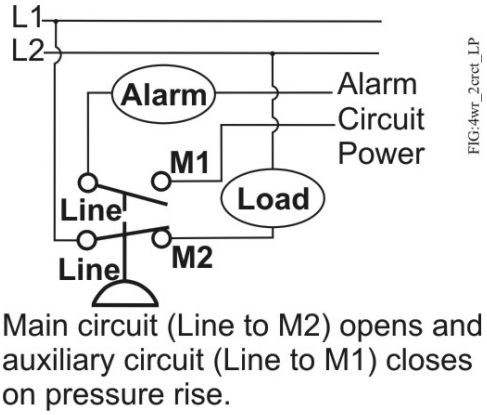

Figure 7: Standard wiring for a DPST switch

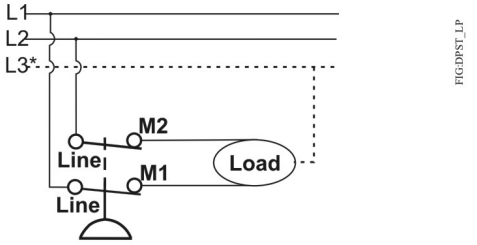

Piping

⚠ CAUTION

Risk of Environmental and Property Damage

Avoid sharp bends in the capillary tubes. Sharp bends can weaken or kink capillary tubes, which may result in refrigerant leaks or restrictions of flow.

© 2026 Johnson Controls. All rights reserved.

⚠ CAUTION

Risk of Environmental and Property Damage

Coil and secure excess capillary tubing away from contact with sharp or abrasive objects or surfaces. Vibration or sharp or abrasive objects in contact with capillary tubes can cause damage that may result in refrigerant leaks or loss of element charge, which may result in damage to the environment or property.

- **Important:** If the control is installed on equipment that contains hazardous or regulated materials such as certain refrigerants or lubricants, you must comply with all standards and regulations governing the containment and handling of those materials.
- **Important:** Do not apply more than 9 ft·lb (12 N·m) of torque to the flare nuts on pressure connection line fittings. Overtightening or applying more than 9 ft·lb (12 N·m) of torque could cause seal failure and voids your warranty.

P70, P72, and P170 low pressure controls are connected to the controlled equipment by a capillary or flexible hose, except ammonia models. Controls are available with a variety of pressure-connection styles.

Avoid severe pressure pulsation at high side pressure connections. Install the pressure connection to pressure-tap points away from the compressor, to minimize the effects of pressure pulsation from reciprocating compressors.

- **Important:** After you install the control, evacuate pneumatic and pressure connection lines to remove air, moisture, and other contaminants in a manner consistent with applicable environmental regulations and standards.

Setup and adjustments

⚠ CAUTION

Risk of Property Damage

Obtain and use the compressor manufacturer's net oil bearing pressure specifications. If necessary, reset the cut out pressure difference to the manufacturer's specifications. Using improper pressure settings may damage the control, compressor, or other controlled equipment.

- **Important:** Use the pressure control settings recommended by the manufacturer of the controlled equipment. Do not exceed the pressure ratings of the controlled equipment or any of its components when checking pressure control operation or operating the controlled equipment.
- **Important:** After you mount, wire, and evacuate the control, attach a reliable set of gauges to the controlled equipment, and operate the equipment for at least three cycles at the pressures necessary to verify the control setpoints and correct equipment operation.

Adjustment procedures for the P70, P72, and P170 dual pressure controls vary depending on the model. To adjust the controls, complete the procedures in the following sections. Refer to the product label inside the control cover for the model number and switch action. Check the front of the control cover to determine if the control is an all-range or MICRO-SET model.

© 2026 Johnson Controls. All rights reserved.

Figure 8: Control adjustment components

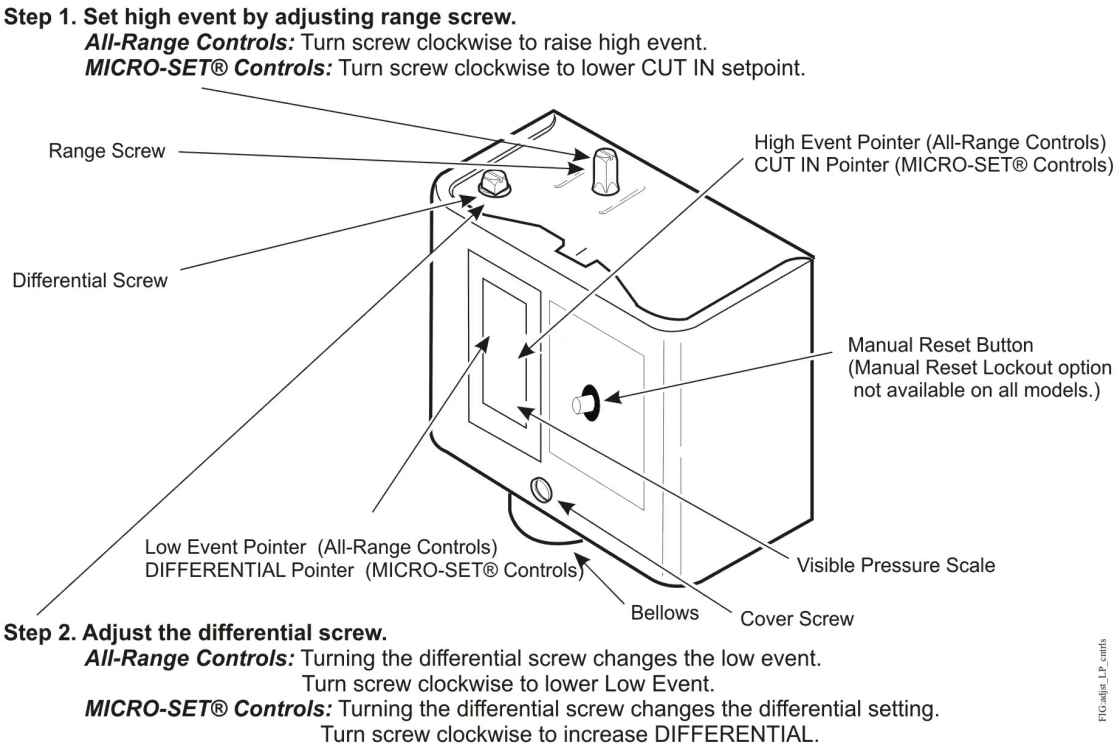

Table 6: Low event and high event definitions

Model Types	Switch and Action	Low Event	High Event
P70A, P70B, P170A	Single-Pole Single-Throw (SPST) Open-Low	Cutout (Opens Line to M1)	Cut In (Closes Line to M1)
P70C, P170C	SPST Open-High	Cut In (Closes Line to M1)	Cutout (Opens Line to M1)
P70E	Single-Pole Double-Throw (SPDT)	Opens 1 to 2 and Closes 1 to 3	
P70G	4-Wire, 2-Circuits, 1 N.O., 1 N.C. Open-Low	Cutout (Opens M2 to Line and Closes M1 to Line)	Cut In (Closes M2 to Line and Opens M1 to Line)
P72A	Double-Pole Single-Throw (DPST) Open-Low	Cutout (Opens M1 to Line and M2 to Line)	Cut In (Closes M1 to Line and M2 to Line)

Setting up all-range controls

The control displays the cut in and cut out setpoints.

1. To adjust the cut in and cut out setpoints up or down simultaneously, turn the range screw. The adjustment maintains the set differential value.
2. To adjust the low event and change the differential value, turn the differential screw.

Setting up MICRO-SET controls

Set up only the low side of a MICRO-SET control. The low side of MICRO-SET controls features a scale plate that displays the cut in setpoint on the right and the differential setting on the left.

1. To adjust the cut in setpoint, turn the range screw.
2. To adjust the cut out pressure and change the differential setting, turn the differential screw.

© 2026 Johnson Controls. All rights reserved.

Adjusting the limit knob

Some models of control include a limited knob adjustment kit. The knob restricts the adjustment of the pressure control, and deters over-adjustment or tampering with the control. A stop on the knob limits adjustments to less than one turn.

Figure 9: Installing the limit knob

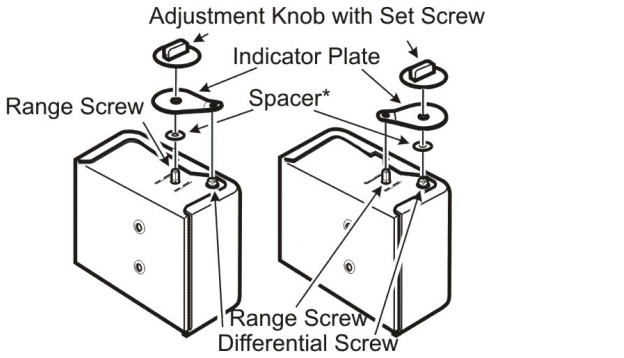

To install the limited knob adjustment kit, complete the following steps:

1. Determine which adjustment screw you want to adjust and install the knob accordingly:
   - To lock the differential setting and allow limited adjustment of the low event and high event, choose the range screw.
   - To lock the high event and allow limited adjustment of the low event of an all-range model or the differential of a MICRO-SET model, choose the differential screw.
2. Adjust the high and low events on all-range controls, or adjust the differential setting, on MICRO-SET controls.
3. Place the spacer on the screw that you want to adjust.
   - All-range controls with limited knob adjustment kits have round and knurled adjustment screws. Place the spacer on the range screw.
   - MICRO-SET controls have square adjustment screws. Place the spacer on the same adjustment screw as the knob.
4. Align the large end of the indicator plate over the adjustment screw with the spacer.
5. Align the small end of the indicator plate over the adjustment screw to be locked.
6. Align the knob over the large end of the indicator plate.
7. Attach the knob to the adjustment screw, and tighten the set screw.

ⓘ **Note:** The limited knob adjustment kit is for exclusively an all-range control or exclusively a MICRO-SET control. You cannot interchange.

Preparing to leave a low pressure cut out control

Important: Use the pressure control settings recommended by the manufacturer of the controlled equipment. Do not exceed the pressure ratings of the controlled equipment or any of its components when checking pressure control operation or operating the controlled equipment.

© 2026 Johnson Controls. All rights reserved.

Important: After you mount, wire, and evacuate the control, attach a reliable set of gauges to the controlled equipment, and operate the equipment for at least three cycles at the pressures necessary to verify the control setpoints and correct equipment operation.

Before you leave a low pressure cut-out application, check the control operation with the following steps:

1. Check the product label on the inside of the control cover, for model number and switch action. For details about your model, see Table 6.
2. Attach a reliable gauge to the suction service port and run the system at normal conditions.
3. Slowly front-seat the suction valve and allow the low side to pump down. Observe the control's low event switching pressure on the gauge.
4. Slowly back the suction valve off the front-seated position and allow the low side pressure to rise. Observe the control's high event switching pressure on the gauge.
5. Adjust the settings as needed. Repeat the steps if needed.

Performing a manual reset

Pressure controls with the manual reset option lock out when they reach the cut out pressure setpoint. You must manually reset the control to restart the controlled equipment. The manual reset mechanism is trip-free and the user cannot override it by blocking or tying down the reset button.

1. Before you reset locked-out equipment, determine and remedy the cause of the lockout.
2. Wait for the sensed pressure return to the cut in setpoint.
3. Press and release the manual reset button to restore operation of the controlled equipment.

Electrical ratings

Table 7: SPST electrical ratings

cULus standard single-phase ratings					
VAC at 60 Hz	**120 VAC**	**208 VAC**	**240 VAC**	**480 VAC**	**600 VAC**
Full load amps	24.0	24.0	24.0	5.0	4.8
Locked rotor amps	144.0	144.0	144.0	30.0	28.8
Resistive amps	24.0	24.0	24.0	—	—
Pilot duty	125 VA at 120 VAC to 600 VAC. 20 VA at 120 VDC to 300 VDC.				

Table 8: SPDT electrical ratings

cULus			
VAC at 60 Hz	**120 VAC**	**208 VAC**	**240 VAC**
Full load amps	16.0	9.2	8.0
Locked rotor amps	96.0	55.2	48.0
Resistive amps	16.0	16.0	16.0
Pilot duty	125 VA at 120 VAC to 600 VAC.		

© 2026 Johnson Controls. All rights reserved.

Table 9: Four-wire two-circuit electrical ratings

cULus										
Line to M2, main contact							Line to M1, auxiliary contacts			
VAC at 60 Hz	120 VAC	208 VAC	240 VAC	277 VAC	480 VAC	600 VAC	120 VAC	208 VAC	240 VAC	277 VAC
Full load amps	16.0	9.2	8.0	—	5.0	4.8	6.0	3.3	3.0	—
Locked rotor amps	96.0	55.2	48.0	—	30.0	28.8	36	19.8	18	—
AC non-inductive amps	16.0	9.2	8.0	7.2	—	—	6.0	6.0	6.0	6.0
Pilot duty	125 VA at 24 VAC to 600 VAC. 20 VA at 120 VDC to 300 VDC.									

Table 10: DPST electrical ratings

Single-phase ratings, for each set of contacts						Three-phase ratings, for two-pole	
VAC at 60 Hz	120 VAC	208 VAC	240 VAC	480 VAC	600 VAC	208 VAC	240 VAC
Full load amps	24.0	24.0	24.0	5.0	4.8	15.9	15.0
Locked rotor amps	144.0	144.0	144.0	30.0	28.8	95.4	90.0
Resistive amps	24.0	24.0	24.0	—	—	—	—
Two-pole DC resistive amps	0.33	0.17	0.17	—	—	—	—
Pilot duty	125 VA at 120 VAC to 600 VAC. 20 VA at 120 VDC to 300 VDC.						

Technical specifications

Table 11: Technical specifications

Specification	Details
Product Switch Action	P70, P170: SPST; 4-wire/2-circuit; or SPDT PENN switch P72: DPST
Pressure Connection	P70, P72 Standard Models: various connections available. P170 Standard Models: 1/4 in. SAE male flare Ammonia Compatible Models: 1/4 in. stainless steel female NPT connection
Ambient Temperature	P70E Models: 50 to 104°F (10 to 40°C) All Other Models: −40 to 140°F (−40 to 60°C)
Case and Cover	Case is galvanized steel; cover is galvanized and painted steel.
Dimensions (H × W × D)	3 1/4 in. × 4 in. × 2 1/16 in. (83 mm × 101 mm × 53 mm)

© 2026 Johnson Controls. All rights reserved.

Table 11: Technical specifications

Specification	Details
Approximate Shipping Weight	Individual Pack: 2.4 lb (1.08 kg) Bulk Pack: (Multiples of 10 controls) 25 lb (11.3 kg)
Compliance	North America: cULus Listed; UL 60730 United States: Controllers, Refrigeration - SDFY.SA516 Canada: Controllers, Refrigeration - SDFY7.SA516 LZGH2/8: Flame Arrest Protected A2L Refrigerants - UL E533907

The performance specifications are nominal and conform to acceptable industry standards. For application at conditions beyond these specifications, contact Refrigeration Application Engineering at 1-800-275-5676. Johnson Controls shall not be liable for damages resulting from misapplication or misuse of its products.

Table 12: Accessories

Type of bracket	5 per box	10 per box
L-shaped horizontal surface mounting bracket	BKT38A-600R	BKT38A-610R
Vertical surface mounting bracket	BKT40A-600R	BKT40A-610R

Conformity declaration

Table 13: SPDT switch models

Information	Description
Purpose of control	Pressure operating control
Method of mounting control	Surface mounted - permanently attached through usage of a mounting bracket
Method of earthing of control	Wiring binding screw terminal
Type 2 action	Type 2.B.L (Micro-disconnection) for all model ratings other than 600 V. Type 2.C.L (Micro-interruption) for all models at 600 V rating. Additional suffixes D and H for the high pressure switch side of models P70SA and P170SA.
External pollution situation	Pollution degree 3
Rated impulse voltage	6,000 V
Deviation and drift	The deviation does not exceed 105% of the set point. The drift does not exceed 5%.

Table 14: SPST, 4-wire 2-circuit, and DPST models

Information	Description
Purpose of control	Pressure operating or pressure cut out control, depending on the model. See Functionality.
Method of mounting control	Surface mounted - permanently attached through usage of a mounting bracket
Method of earthing of control	Wiring binding screw terminal
Type 1 or Type 2 action	See Functionality.

© 2026 Johnson Controls. All rights reserved.

Table 14: SPST, 4-wire 2-circuit, and DPST models

Information	Description
External pollution situation	Pollution degree 3
Rated impulse voltage	6,000 V
Deviation and drift	The deviation does not exceed 105% of the set point. The drift does not exceed 5%.

Table 15: P70E control pressure table

Operating pressure	Operating differential pressure	Maximum working pressure (over pressure)
20 in. Hg to 100 psi	5 psi	325 psi

Table 16: P70A, P70C, P170A, and P170C controls pressure table

Operating pressure	Operating differential pressure	Maximum working pressure (over pressure)
0 psi to 150 psi	12 psi to 70 psi	325 psi
12 in. Hg to 80 psi	5 psi to 35 psi	525 psi
20 in. Hg to 50 psi	5 psi to 35 psi	525 psi
20 in. Hg to 100 psi	7 psi to 50 psi	325 psi

Contact information

Contact your local Johnson Controls representative: www.johnsoncontrols.com/locations

Contact Johnson Controls: www.johnsoncontrols.com/contact-us

Product warranty

This product is covered by a limited warranty, details of which can be found at www.johnsoncontrols.com/buildingswarranty.

Single point of contact

APAC	EU	UK	NA/SA
JOHNSON CONTROLS C/O CONTROLS PRODUCT MANAGEMENT NO. 32 CHANGJIANG RD NEW DISTRICT WUXI JIANGSU PROVINCE 214028 CHINA	JOHNSON CONTROLS VOLTAWEG 20 6101 XK ECHT THE NETHERLANDS	JOHNSON CONTROLS TYCO PARK GRIMSHAW LANE MANCHESTER M40 2WL UNITED KINGDOM	JOHNSON CONTROLS 5757 N GREEN BAY AVE. GLENDALE, WI 53209 USA

All specifications and other information shown were current as of document revision and are subject to change without notice.

© 2026 Johnson Controls. All rights reserved.