P70, P72, and P170 Series Controls for High Pressure Applications Installation Guide

Part No. 24-7664-1938 Rev. G

2026-04-28

Applications

P70, P72, and P170 Series Controls for High Pressure Applications provide high side pressure control on commercial refrigeration and air conditioning applications.

Important: Except for those models listed as refrigeration pressure cut out controls, use the P70, P72, and P170 Series Controls for High Pressure Applications only as an operating control. Where failure or malfunction of a P70, P72, or P170 pressure control could lead to personal injury or property damage to the controlled equipment or other property, additional precautions must be designed into the control system. Incorporate and maintain other devices such as supervisory or alarm systems or safety or cut out controls intended to warn of, or protect against, failure or malfunction of the P70, P72, or P170 pressure control.

- P70C, P70D, P170C, and P170D type models with single-pole, single-throw (SPST) open-high switch action are the most popular models and are typically used as high pressure cut out controls. The C type models are automatic reset controls. The D type models have a manual reset lockout mechanism. Some P70C, P70D, P170C, and P170D type models are UL Listed as refrigeration pressure cut out controls. See Selection chart for standard models available.
- P70A and P170A type models feature SPST open-low switch action and typically are used for condenser-fan cycling control.
- P70 and P170 Series models with single-pole, double-throw (SPDT), or 4-wire, 2-circuit switch action allow users to install alarm devices or other control circuits.
- P72 Series models have a double-pole, single-throw (DPST) switch with load-carrying contacts that can provide direct control of 120 VAC to 600 VAC single phase motors and 208 VAC to 240 VAC three-phase motors. See Electrical ratings.

Controls are available in several pressure ranges and are compatible with most common refrigerants.

They may also be used on air, water and other noncorrosive fluid applications. Ammonia compatible models are also available.

⚠ CAUTION

Risk of Property Damage.

Mount the pressure control separately from the electrical cabinet and seal all electrical piping to prevent ammonia from migrating to electrical components. Where there may be exposure to ammonia, use only ammonia compatible control modules and pressure connections. System shutdown due to improper adjustment may cause property damage.

The manual reset lockout mechanism prevents the pressure control from resetting automatically after the control reaches the cut out setpoint, and provides shutdown capability for unmonitored equipment. See Performing a manual reset.

Type 1 (NEMA) enclosures are standard on most models. Type 3R (NEMA) enclosures are also available on quantity orders.

© 2026 Johnson Controls. All rights reserved.

Selection chart

The following tables specify that only some models are UL Listed as refrigeration pressure cut out controls. For models not included in these tables, contact the Refrigeration Application Engineering Group at 1-800-275-5676 for details and availability.

Table 1: Condenser Fan Cycling Control Models (for Noncorrosive Refrigerants)

Model Number	Switch Action	Range Psig (kPa)	Differential Psi (kPa)	Pressure Connection	Maximum Working Pressure (MWP) Psi (kPa)	UL Listed as pressure cut out control
P70AA-118C	SPST Open-Low	100 to 400 (690 to 2758)	Minimum 35 (241) Maximum 200 (1379)	36 in. Capillary with 1/4 in. Flare Nut	475 (3275)	No
P72AA-27C	DPST Open-Low	100 to 400 (690 to 2758)	Minimum 35 (241) Maximum 200 (1379)			No
P170AA-118C	SPST Open-Low			1/4 in. Male Flare Connector		No

Table 2: All-Range Control Models (for Noncorrosive Refrigerants)

Model Number	Switch Action	Range Psig (kPa)	Differential Psi (kPa)	Pressure Connection	Maximum Working Pressure (MWP) Psi (kPa)	UL Listed as pressure cut out control
P70CA-2C	SPST Open-High	50 to 500 (345 to 3448)	Minimum 60 (414) Maximum 150 (1034)	1/4 in. Male Flare Connector	525 (3620)	Yes
P70CA-3C				36 in. Capillary with 1/4 in. Flare Nut		Yes
P70DA-1C			Manual Reset Lockout			Yes
P70KA-1C	4-Wire, 2-Circuit Line-M1 Close-High Line-M2 Open-High					Yes
P170CA-3C	SPST Open-High		Minimum 60 (414) Maximum 150 (1034)	1/4 in. Male Flare Connector		Yes
P170DA-1C			Manual Reset Lockout			Yes
P170KA-1C	4-Wire, 2-Circuit Line-M1 Close-High Line-M2 Open-High					Yes

Table 3: Ammonia-Compatible Models

Model Number	Switch Action	Range Psig (kPa)	Differential Psi (kPa)	Pressure Connection	Maximum Working Pressure (MWP) Psi (kPa)	UL Listed as pressure cut out control
P70AA-119C	SPST Open-Low	50 to 300	Minimum 20 (138) Maximum 120 (827)	1/4 in. SS Female NPT	525 (3620)	No
P70DA-2C	SPST Open-High	50 to 500 (345 to 3448)	Manual Reset Lockout			Yes

© 2026 Johnson Controls. All rights reserved.

Table 4: High Pressure Control Models for High Pressure Non-corrosive Refrigerants

Model Number	Switch Action	Range Psig (kPa)	Differential Psi (kPa)	Pressure Connection	Maximum Working Pressure (MWP) Psi (kPa)	UL Listed as pressure cut out control
P70AA-400C	Condenser Fan Cycling SPST Opens Low	100 to 470 (689 to 3241)	Adjustable 35 to 200 (241 to 1379)	36 in. Capillary with 1/4 in. Flare Nut	690 (4757)	No
P170AA-400C				1/4 in. Male Flare Connector		No
P70CA-400C	SPST Opens High	200 to 610 (1379 to 4206)	Adjustable 60 to 150 (413 to 1034)	36 in. Capillary with 1/4 in. Flare Nut		Yes
P170CA-400C				1/4 in. Male Flare Connector		Yes
P70DA-400C		200 to 610 (1379 to 4206)	Manual Reset Lockout	36 in. Capillary with 1/4 in. Flare Nut		Yes
P170DA-400C				1/4 in. Male Flare Connector		Yes

Functionality

Table 5: Functionality

Model	Function	Setpoint – Adjustable / Fixed	Contact configuration – Reset Action (Manual/Auto)	Action Type Description
P70E	Operating	Adjustable	SPDT – auto	2.B.L for all ratings other than 600 V; 2.C.L for 600 V
P70A, P170A / P72A single pressure control	Operating	Adjustable ⓘ **Note:** Use the high pressure cut out only at the factory-set trip value	SPST / DPST N.C. contacts open Low Pressure – Auto reset	2.B.L for all ratings other than 600 V; 2.C.L for 600 V
P70C, P170C / P72C single pressure control	Operating or cut out ⓘ **Note:** Use the high pressure cut out only at the factory-set trip value		SPST / DPST N.C. contacts open High Pressure – Auto reset	2.B.L for all ratings other than 600 V; 2.C.L for 600 V
P70D, P170D single pressure control	Operating or cut out ⓘ **Note:** Use the high pressure cut out only at the factory-set trip value		SPST / DPST N.C. contacts open High Pressure – Manual reset	2.B.L.D.J for all ratings other than 600 V; 2.C.L.D.J for 600 V
P70J single pressure control	Operating or cut out ⓘ **Note:** Use the high pressure cut out only at the factory-set trip value		SPST N.C. contacts L–M2 open High Pressure – Auto reset	2.B.L for all ratings other than 600 V; 2.C.L for 600 V
			SPST N.O. contacts L–M1 close High Pressure – Auto reset	2.C.L

© 2026 Johnson Controls. All rights reserved.

Table 5: Functionality

Model	Function	Setpoint – Adjustable / Fixed	Contact configuration – Reset Action (Manual/Auto)	Action Type Description
P70K, P170K single pressure control	Operating or cut out ⓘ **Note:** Use the high pressure cut out only at the factory-set trip value	Adjustable ⓘ **Note:** Use the high pressure cut out only at the factory-set trip value	SPST N.C. contacts L– M2 open High Pressure – Manual reset	2.B.L.D.J for all ratings other than 600 V; 2.C.L.D.J for 600 V
			SPST N.O. contacts L– M1 close High Pressure – Manual reset	2.C.L.D.J

Dimensions

Figure 1: Dimensions for controls with Type 1 (NEMA) enclosures, in. (mm)

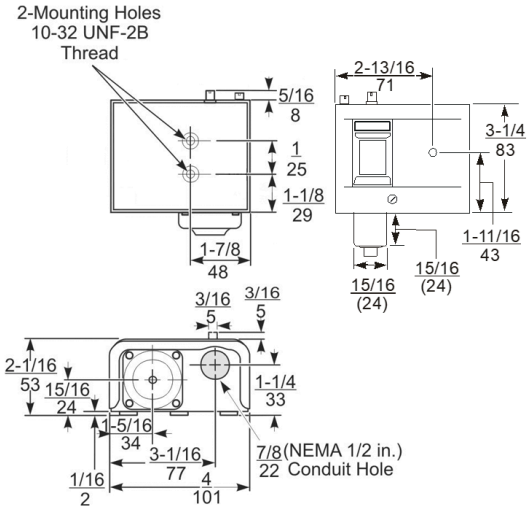

© 2026 Johnson Controls. All rights reserved.

Figure 2: Dimensions for controls with Type 3R (NEMA) enclosures, in. (mm)

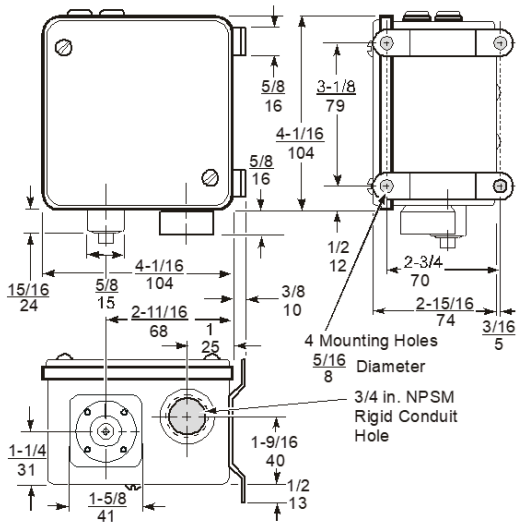

Mounting

Mount the control in an accessible position, where the control and pressure connection are not subject to damage.

Mount the pressure control upright and level. Position the pressure connection line to allow drainage away from control bellows. Locate pressure tap points on the top side of the refrigerant lines to reduce the possibility of oil, liquids, or sediment accumulating in the bellows, which could cause control malfunction.

Use the two supplied screws with the threaded holes at the back of the control to mount the control to the appropriate bracket for your surface.

Mount controls with Type 1 (NEMA) enclosures on horizontal or vertical flat surfaces.

Mount controls with Type 3R (NEMA) enclosures in a level, upright position with the bellows and conduit connection facing down. Ensure that all gaskets are in place. Mounting Type 3R (NEMA) enclosures in any position other than upright and level may trap water in the enclosure and submerge internal control components.

Important: Use only the mounting screws supplied with the mounting bracket to avoid damaging internal components. Be careful not to distort or bend the control case when mounting the control to an uneven surface. Using other screws or bending the control case will void the warranty.

© 2026 Johnson Controls. All rights reserved.

Figure 3: Mounting a Type 1 (NEMA) control on a horizontal surface with BKT38A-6xxR

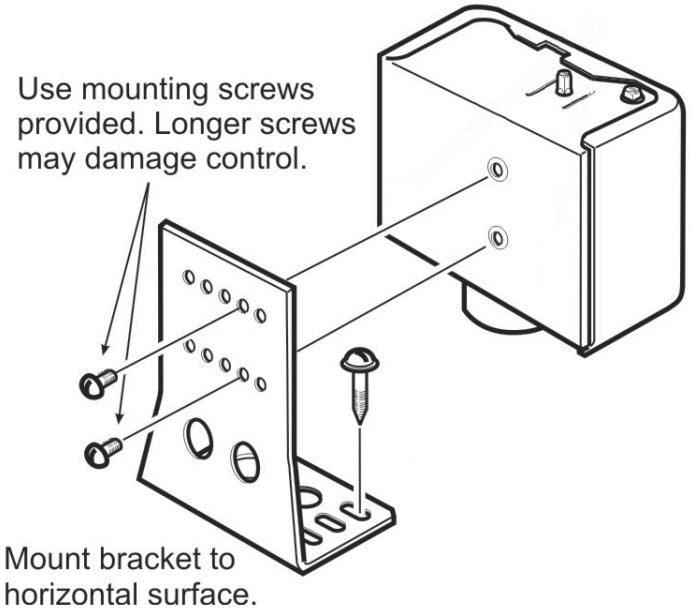

Figure 4: Mounting a Type 1 (NEMA) control on a vertical surface with BKT40A-6xxR

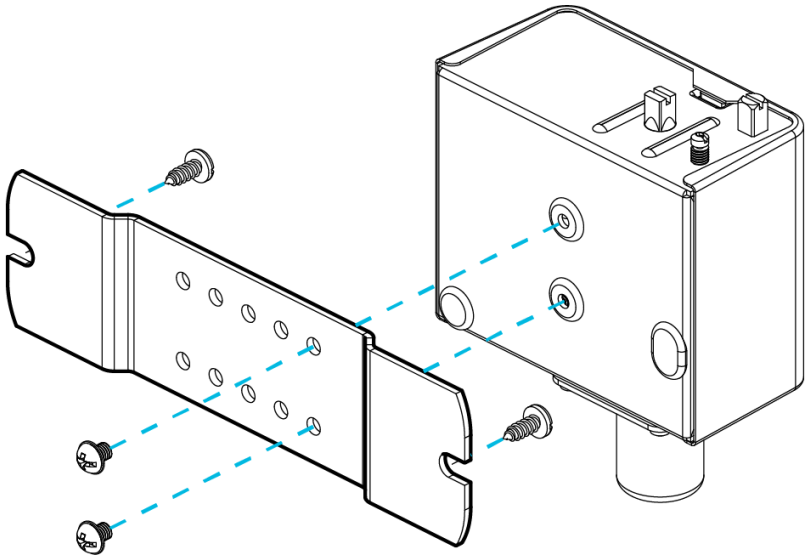

Pressure connections

P70, P72, and P170 high pressure controls are connected to the controlled equipment by a capillary, except ammonia models. These controls are available with a variety of pressure connection styles.

Important: If these controls are installed on equipment that contains hazardous or regulated materials, such as refrigerants or lubricants, you must comply with all standards and regulations governing the containment and handling of those materials.

When you install pressure connection lines, adhere to the following guidelines :

- Avoid sharp bends in the capillary tube to prevent weakening, kinking, leaks, or flow restrictions.

© 2026 Johnson Controls. All rights reserved.

- Allow some slack in the capillary tube to dampen mechanical vibration that could weaken or damage the tubing.
- Coil any excess capillary tubing into smooth circular loops of approximately 2 in. to 3 in. (50 mm to 75 mm) diameter, and securely fasten the coiled tubing.
- Avoid contact between the capillary tubing and sharp or abrasive objects, because vibration can cause leaks.
- Do not over-tighten flare nuts on pressure connection line fittings. Over-tightening the flare nuts can damage threads or connectors and could cause leaks. Do not exceed 9 ft·lb (12 N·m) of torque when you tighten brass flare connections.
- Install pressure connection lines to pressure tap points away from the compressor to minimize the pressure pulsation effects from reciprocating compressors.

Important: After you install the control, evacuate the pneumatic and pressure connection lines to remove air, moisture and other contaminants in a manner consistent with applicable environmental regulations and standards.

Wiring

P70, P72, and P170 controls for high pressure applications are available with several switch options and electrical ratings. Check the label inside the control cover for model number, switch action, and electrical rating. For switch actions and models, see Table 6.

Note: For electrical ratings of each model type, see Electrical ratings.

Check the wiring terminal designations on the control switch-block, and refer to the following guidelines and applicable wiring diagrams when wiring the control.

WARNING

Risk of Electrical Shock.

Disconnect each of multiple power supplies before making electrical connections. More than one disconnect may be required to completely de energize equipment. Contact with components carrying hazardous voltage can cause electric shock and may result in severe personal injury or death.

Important: Use only the terminal screws that are supplied with the switch-block. Using other screws may cause damage to the switch-block and will void the warranty.

Important: Use copper conductors only. Make all wiring connections in accordance with local, national, and regional regulations. Do not exceed the controls.

© 2026 Johnson Controls. All rights reserved.

Figure 5: Standard wiring for an SPST switch

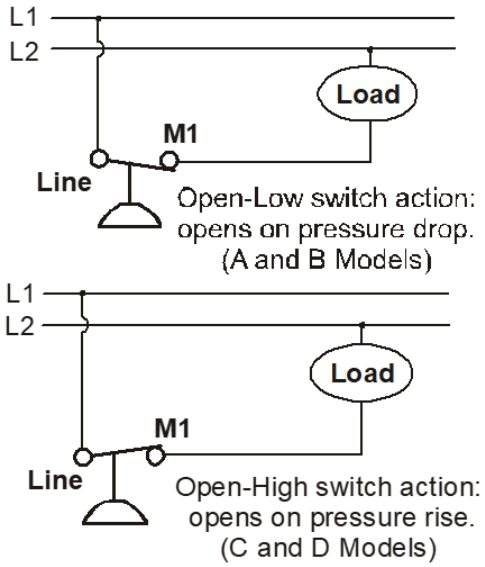

Figure 6: Standard wiring for an SPDT switch

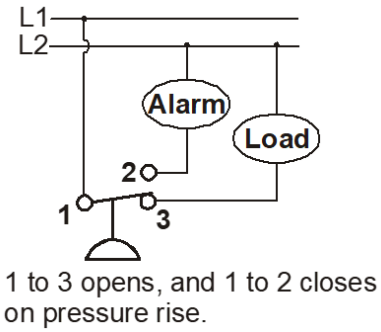

Figure 7: Standard wiring for a four-wire two-circuit switch

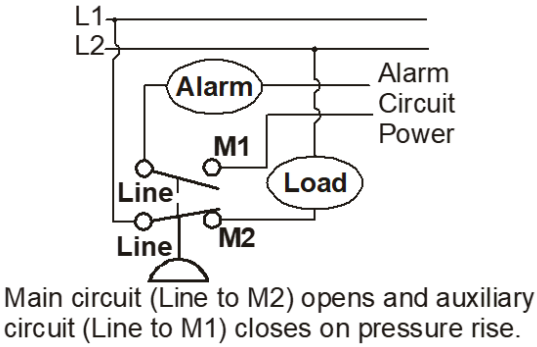

© 2026 Johnson Controls. All rights reserved.

Figure 8: Standard wiring for a DPST switch

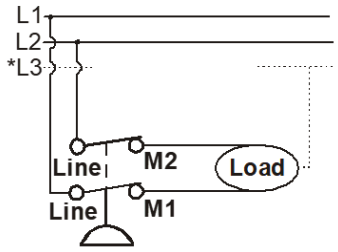

Line to M1, and Line to M2 open on pressure rise.
(*L3 is third supply line in 3-phase applications.)

Adjustments

Adjustment procedures for the P70, P72, and P170 dual pressure controls vary depending on the model. To adjust the controls, complete the procedures in the following sections. Refer to the product label inside the control cover for the model number and switch action.

Figure 9: Control adjustment components

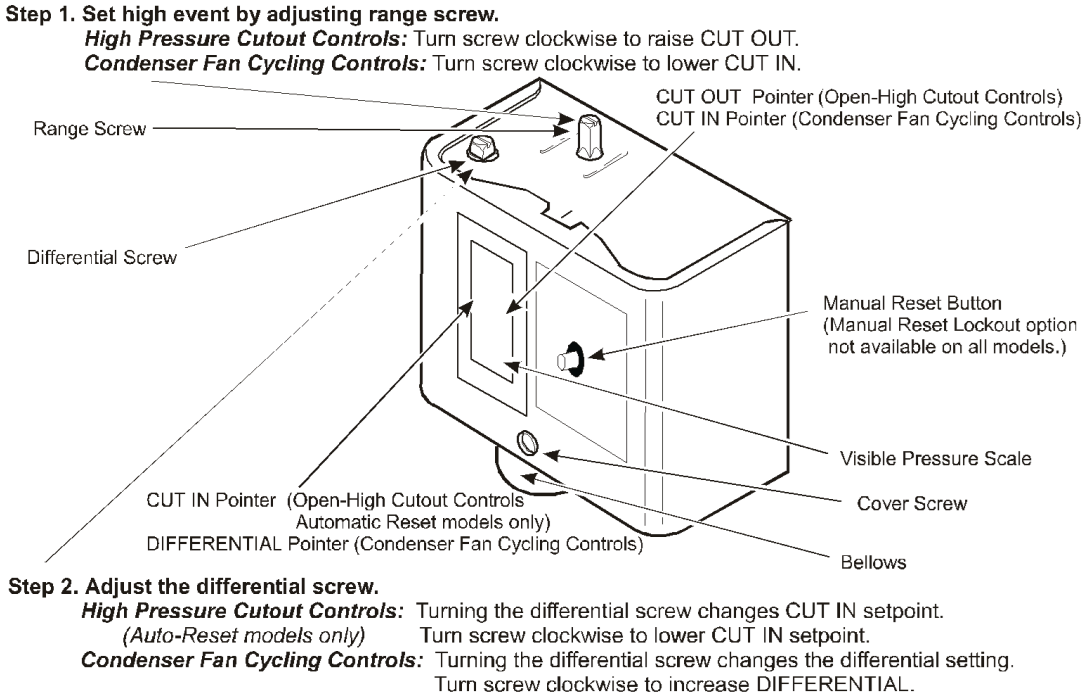

- **Important:** Do not adjust pointers beyond the highest or lowest indicator marks on the control's pressure scale. Adjusting pointers beyond indicator marks could damage screw threads, could cause inaccurate control operation, and voids the warranty.
- **Important:** Use the pressure control settings recommended by the manufacturer of the controlled equipment. Do not exceed the pressure ratings of the controlled equipment or any of its components when you check pressure control operation or operate the controlled equipment.
- **Important:** After you mount and wire the control, attach a reliable set of gauges to the controlled equipment. Operate the equipment for at least three cycles at the pressures necessary to verify control setpoints and correct equipment operation.

© 2026 Johnson Controls. All rights reserved.

Table 6: Low event and high event definitions

Model Types	Switch and Action	Low Event	High Event
P70A, P170A	Single-Pole Single-Throw (SPST) Open-Low	Cutout (Opens Line to M1)	Cut In (Closes Line to M1)
P70C, P70D, P170C, P170D	Single-Pole Single-Throw (SPST) Open-High	Cut In (Closes Line to M1)	Cutout (Opens Line to M1)
P70E	Single-Pole Double-Throw (SPDT)	Opens 1 to 2 and Closes 1 to 3	Closes 1 to 2 and Opens 1 to 3
P70J, P70K, P170K	4-Wire, 2-Circuits, 1-NO, 1-NC Open-High	Cut In (Closes M2 to Line and Closes M1 to Line)	Cutout (Opens M2 to Line and Closes M1 to Line)
P72A	Double-Pole Single-Throw (DPST) Open-Low	Cutout (Opens M1 to Line and M2 to Line)	Cut In (Closes M1 to Line and M2 to Line)
P72C	(DPST) Open-High	Cut In (Closes M1 to Line and M2 to Line)	Cutout (Opens M1 to Line and M2 to Line)

Setting a cut out setpoint on an automatic reset model

High pressure cut out controls with automatic reset use a scale plate that displays the cut in and cut out setpoints. The visible scale on the control shows these values. The range and differential screws affect the settings.

1. To adjust the cut in and cut out setpoints simultaneously, turn the range screw. The differential remains constant.
2. To adjust only the low event, turn the differential screw.

Setting a cut out setpoint on a manual reset model

To adjust the cut out setpoint on a manual reset model, turn the range screw.

When a cut out occurs, manual reset models enter a lockout state until the user manually resets the control. High pressure cutout controls with the manual reset option have a scale plate that displays only the cut out setpoint. Manual reset models do not have a differential screw. The differential pressure value is fixed.

Setting a cut out setpoint on a condenser fan cycling model

Condenser fan cycling pressure controls use an open-low switch action and have a scale plate that displays both the cut in setpoint on the right and the differential setting on the left.

1. To adjust the cut in setpoint, turn the range screw. The differential remains constant.
2. To adjust the differential setting, turn the differential screw.

Performing a manual reset

Pressure controls with the manual reset option lock out when they reach the cut out pressure setpoint. You must manually reset the control to restart the controlled equipment. The manual reset mechanism is trip-free and the user cannot override it by blocking or tying down the reset button.

1. Before you reset locked-out equipment, determine and remedy the cause of the lockout.
2. Wait for the sensed pressure to drop at least 70 psig below the cut out setpoint.
3. Press and release the manual reset button to restore operation of the controlled equipment.

© 2026 Johnson Controls. All rights reserved.

Electrical ratings

Table 7: SPST electrical ratings

cULus standard single-phase ratings					
VAC at 60 Hz	**120 VAC**	**208 VAC**	**240 VAC**	**480 VAC**	**600 VAC**
Full load amps	24.0	24.0	24.0	5.0	4.8
Locked rotor amps	144.0	144.0	144.0	30.0	28.8
Resistive amps	24.0	24.0	24.0	—	—
Pilot duty	125 VA at 120 VAC to 600 VAC. 20 VA at 120 VDC to 300 VDC.				

Table 8: SPDT electrical ratings

cULus			
VAC at 60 Hz	**120 VAC**	**208 VAC**	**240 VAC**
Full load amps	16.0	9.2	8.0
Locked rotor amps	96.0	55.2	48.0
Resistive amps	16.0	16.0	16.0
Pilot duty	125 VA at 120 VAC to 600 VAC.		

Table 9: Four-wire two-circuit electrical ratings

cULus										
Line to M2, main contact							**Line to M1, auxiliary contacts**			
VAC at 60 Hz	**120 VAC**	**208 VAC**	**240 VAC**	**277 VAC**	**480 VAC**	**600 VAC**	**120 VAC**	**208 VAC**	**240 VAC**	**277 VAC**
Full load amps	16.0	9.2	8.0	—	5.0	4.8	6.0	3.3	3.0	—
Locked rotor amps	96.0	55.2	48.0	—	30.0	28.8	36.0	19.8	18.0	—
AC non-inductive amps	16.0	9.2	8.0	7.2	—	—	6.0	6.0	6.0	6.0
Pilot duty	125 VA at 24 VAC to 600 VAC. 20 VA at 120 VDC to 300 VDC.									

Table 10: DPST electrical ratings

Single-phase ratings, for each set of contacts						Three-phase ratings, for two-pole	
VAC at 60 Hz	**120 VAC**	**208 VAC**	**240 VAC**	**480 VAC**	**600 VAC**	**208 VAC**	**240 VAC**
Full load amps	24.0	24.0	24.0	5.0	4.8	15.9	15.0
Locked rotor amps	144.0	144.0	144.0	30.0	28.8	95.4	90.0
Resistive amps	24.0	24.0	24.0	—	—	—	—

© 2026 Johnson Controls. All rights reserved.

Table 10: DPST electrical ratings

Single-phase ratings, for each set of contacts						Three-phase ratings, for two-pole	
VAC at 60 Hz	**120 VAC**	**208 VAC**	**240 VAC**	**480 VAC**	**600 VAC**	**208 VAC**	**240 VAC**
Two-pole DC resistive amps	0.33	0.17	0.17	—	—	—	—
Pilot duty	125 VA at 120 VAC to 600 VAC. 20 VA at 120 VDC to 300 VDC.						

Technical specifications

Table 11: Technical specifications

Specification		
Product	P70, P72, and P170 Controls for High Pressure Applications	
Switch Action	P70, P170: SPST; 4-Wire/2-Circuit; or SPDT PENN® switch P72: DPST	
Pressure Connection	P70, P72 Standard Models	Various connections available
	P170 Standard Models	1/4 in. SAE male flare
	Ammonia Compatible Models	1/4 in. stainless steel female NPT connection
Ambient Temperature	P70E models: 50 to 104°F (10 to 40°C) All other models: -40 to 140°F (-40 to 60°C)	
Case and Cover	Type 1 (NEMA) enclosures: Case is galvanized steel; cover is galvanized and painted steel. Type 3R (NEMA) enclosures: Case and cover are plated and painted steel.	
Dimensions (H x W x D)	With Type 1 (NEMA) enclosure: 3-1/4 x 4 x 2-1/16 in. (83 x 101 x 53 mm) With Type 3R (NEMA) enclosure: 4-1/16 x 4-1/16 x 2-15/16 in. (104 x 104 x 74 mm)	
Approximate Shipping Weight	Individual pack: • Type 1 (NEMA): 2.4 lb (1.08 kg) • Type 3R (NEMA): 3.3 lb (1.5 kg) Bulk pack (Multiples of 10 controls): • Type 1 (NEMA): 25 lb (11.3 kg)	
Compliance	North America: cULus Listed; UL 60730 United States: Controllers, Refrigeration - SDFY.SA516 Canada: Controllers, Refrigeration - SDFY7.SA516 LZGH2/8: Flame Arrest Protected A2L Refrigerants - UL E533907	

The performance specifications are nominal and conform to acceptable industry standards. For application at conditions beyond these specifications, contact the Refrigeration Application Engineering Group at 1-800-275-5676. Johnson Controls shall not be liable for damages resulting from misapplication or misuse of its products.

© 2026 Johnson Controls. All rights reserved.

Table 12: Accessories

Type of bracket	5 per box	10 per box
L-shaped horizontal surface mounting bracket	BKT38A-600R	BKT38A-610R
Vertical surface mounting bracket	BKT40A-600R	BKT40A-610R

Conformity declaration

Table 13: SPDT switch models

Information	Description
Purpose of control	Pressure operating control
Method of mounting control	Surface mounted - permanently attached through usage of a mounting bracket
Method of earthing of control	Wiring binding screw terminal
Type 2 action	Type 2.B.L (Micro-disconnection) for all model ratings other than 600 V. Type 2.C.L (Micro-interruption) for all models at 600 V rating.
External pollution situation	Pollution degree 3
Rated impulse voltage	6,000 V
Deviation and drift	The deviation does not exceed 105% of the set point. The drift does not exceed 5%.

Table 14: SPDT switch models pressure table

Operating pressure	Operating differential pressure	Maximum working overpressure
175 psi to 425 psi	15 psi	475 psi

Table 15: SPST, 4-wire 2-circuit, and DPST models

Information	Description
Purpose of control	Pressure operating or pressure cut out control, depending on the model. See Functionality.
Method of mounting control	Surface mounted - permanently attached through usage of a mounting bracket
Method of earthing of control	Wiring binding screw terminal
Type 1 or Type 2 action	See Functionality.
External pollution situation	Pollution degree 3
Rated impulse voltage	6,000 V
Deviation and drift	The deviation does not exceed 105% of the set point. The drift does not exceed 5%.

© 2026 Johnson Controls. All rights reserved.

Table 16: SPST, 4-wire 2-circuit, and DPST models pressure table

Operating pressure	Operating differential pressure	Maximum working pressure (over pressure)
50 psi to 300 psi	20 psi to 120 psi	400 psi
100 psi to 400 psi	35 psi to 200 psi	400 psi
100 psi to 470 psi	35 psi to 200 psi	690 psi
50 psi to 500 psi	60 psi to 150 psi	525 psi
200 psi to 610 psi	60 psi to 150 psi	690 psi

Contact information

Contact your local Johnson Controls representative: www.johnsoncontrols.com/locations

Contact Johnson Controls: www.johnsoncontrols.com/contact-us

Product warranty

This product is covered by a limited warranty, details of which can be found at www.johnsoncontrols.com/buildingswarranty.

Single point of contact

APAC	EU	UK	NA/SA
JOHNSON CONTROLS C/O CONTROLS PRODUCT MANAGEMENT NO. 32 CHANGJIANG RD NEW DISTRICT WUXI JIANGSU PROVINCE 214028 CHINA	JOHNSON CONTROLS VOLTAWEG 20 6101 XK ECHT THE NETHERLANDS	JOHNSON CONTROLS TYCO PARK GRIMSHAW LANE MANCHESTER M40 2WL UNITED KINGDOM	JOHNSON CONTROLS 5757 N GREEN BAY AVE. GLENDALE, WI 53209 USA

All specifications and other information shown were current as of document revision and are subject to change without notice.

© 2026 Johnson Controls. All rights reserved.