EMCOMMS and EMPULSE Electrical Energy Meters

Product Bulletin

Code No. LIT-12013038
Issued April 2019

Introduction

The Johnson Controls® EMCOMMS and EMPULSE electrical energy sub-meters enable building management professionals to deploy sub-metering solutions more efficiently than ever before.

The meters are used in conjunction with patented current voltage transducers (CVT). A Rogowski Coil captures the load's current. Two leads from the CVT terminate in the panel to pick up the voltage. The CVTs digitize the data before sending it to the meter, delivering reliable and consistent output. Other Rogowski Coil-based systems rely on the successful integration of additional hardware and software to calculate electrical power consumption.

EMCOMMS and EMPULSE meters are accurate to 1% for V, A, kilowatt (kW), kilovolt ampere reactive (kVAR), and kilovolt ampere (kVA). This makes them suitable for common building automation systems (BAS) applications. The EMCOMMS and EMPULSE meters are compatible with the following common BAS applications:

- Energy Management Performance Contracting
- Commercial Tenant Monitoring
- Equipment Energy Profiling, for example chillers
- Load Shedding

You can mount the meters inside the panel of the monitored load using magnets. This eliminates the need for a separate enclosure.

The EMCOMMS meter automatically configures the baud rate, serial format, and protocol for both BACnet MS/TP and Modbus® remote terminal unit (RTU). BACnet MS/TP also assigns the address automatically.

Product scope and power requirements

CVTs are available in the following six different current capacities:

- 300 A
- 800 A
- 1500 A
- 2400 A
- 6000 A

The following options are available for the coil circumference of the CVT:

- 9 in.
- 15 in.
- 24 in.
- 36 in.

All CVTs are compatible with system voltages ranging from 90 to 600 VAC.

The meters require an external power supply for operation with the requirements 12 to 30 VDC or 24 VAC, 100 mA maximum.

Figure 1: EMCOMMS and EMPULSE meters



Figure 2: 300 A CVT with a 9 in. coil



Figure 3: Kit for a three-phase system with three CVTs and an EMCOMMS meter

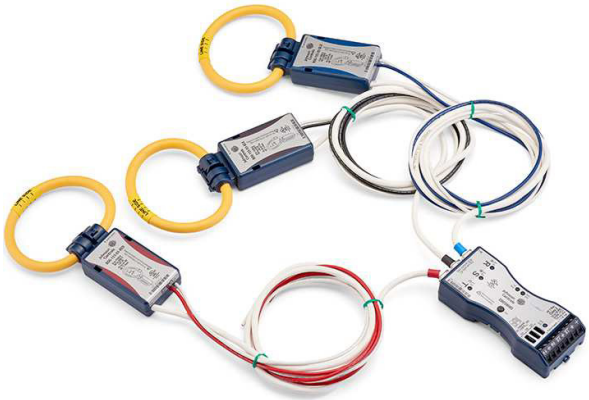

Table 1: EMCOMMS and EMPULSE meters

Features	Benefits
EMCOMMS Includes BACnet MS/TP and Modbus RTU	Allows adaptation to decades of BAS-installed base
EMCOMMS Automatically Configures Baud Rate, Serial Format and Protocol	Allows configuration without set up software
BACnet Assigns an Address to the Connected Meter and Automatically Configures	Provides access to data within minutes of power up
Compact Size with Magnet Mounting Capability	Requires no dedicated enclosure, which saves costs
Horizontal or Vertical DIN Rail Mounting Capability	Add the meters easily to existing building management system (BMS) control panel
High Voltage is External to Meter Connections	Safer commissioning permits division of labor
Both Meter Types Include Two Pulse Inputs	Ability to track positive and negative energy use

Table 2: CVT

Features	Benefits
30 A to 6000 A Capacity	Provide granularity and scalability with the same equipment
Lead Length Choices of 3, 6, and 10 ft	Adapt to installation requirements
Split Core Rogowski Coil is Easy to Install	Install with only a screwdriver for voltage lead
Digital Communication between CVT and Meter	Provides superior noise immunity versus analog coils

Fusing

The voltage lead does not require fusing when the lead length is 10 ft or less. Refer to UL 240.21.

System versatility

The circuit configuration possibilities include single phase, dual circuit (120 V to 208 V), and three phase.

In a typical installation this means a single-phase circuit uses one CVT, a dual-phase circuit two, and a three-phase circuit would use three CVTs.

You can also monitor different loads with a single meter by connecting CVTs of different ampacities to the same meter. See Figure 4 for monitoring a single phase from two or three different load types with a single meter.

Warranty

All products within this bulletin are backed by a 7-year parts warranty.

Figure 4: Three independent loads digitally reporting to a single meter

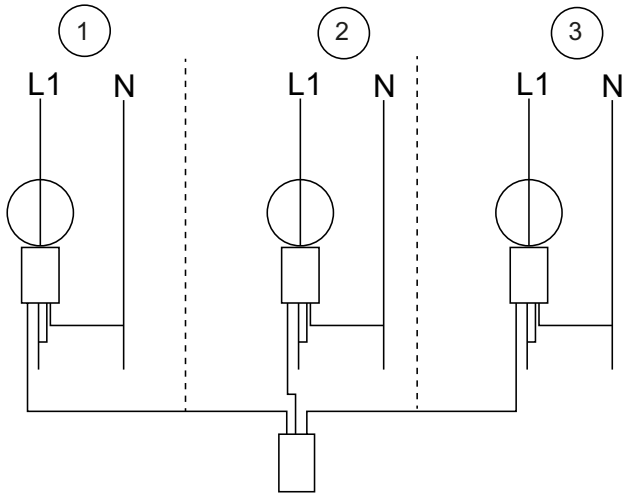

Table 3: Different driven equipment reporting to the same meter

Motor number	Voltage	Ampere
Motor 1	120 V	10 A
Motor 2	208 V	150 A
Motor 3	277 V	310 A

Kit nomenclature and order codes

See Table 4 for product codes for most job requirements when using the EMCOMMS meter. Select one part number to get both meter and CVTs.

Table 4: Meter Kit: BACnet MS/TP or Modbus RTU plus CVTs

		EMC	-	3N	-	03S	-	03
Meter Type	EMCOMMS Meter (BACnet MS/TP or Modbus RTU)							
Phases	3N (3 CVTs) 2N (2 CVTs)[1]							
Amperes and CVT circumference	03S (300 A, 9 in.) 08S (800 A, 9 in.) 08M (800 A, 15 in.) 15S (1500 A, 9 in.) 15M (1500 A, 15 in.) 24M (2400 A, 15 in.) 24L (2400 A, 24 in.) 60G (6000 A, 36 in.)							
CVT lead length	03 (3 ft) 10 (10 ft)							

[1] Valid CVT amp ratings: 03S, 08S, 08M

Select the number of phases, applicable ampacity, and CVT circumference and lead length. Add an external power supply (not shown here), and the bill of material (BOM) is complete. Select the 10 ft option if you are unsure about the lead length. The lead comes with a registered jack (RJ12) connector that plugs into the meter.

Table 5: Order codes for complete meter kit

Order code	Description
EMC-3N-03S-03	Energy meter kit, Comms type, 3 CVT, 300 A, 9 in. circumference, 3 ft lead
EMC-3N-03S-10	Energy meter kit, Comms type, 3 CVT, 300 A, 9 in. circumference, 10 ft lead
EMC-3N-08S-03	Energy meter kit, Comms type, 3 CVT, 800 A, 9 in. circumference, 3 ft lead
EMC-3N-08S-10	Energy meter kit, Comms type, 3 CVT, 800 A, 9 in. circumference, 10 ft lead
EMC-3N-08M-03	Energy meter kit, Comms type, 3 CVT, 800 A, 15 in. circumference, 3 ft lead
EMC-3N-08M-10	Energy meter kit, Comms type, 3 CVT, 800 A, 15 in. circumference, 10 ft lead
EMC-3N-15S-03	Energy meter kit, Comms type, 3 CVT, 1500 A, 9 in. circumference, 3 ft lead
EMC-3N-15S-10	Energy meter kit, Comms type, 3 CVT, 1500 A, 9 in. circumference, 10 ft lead
EMC-3N-15M-03	Energy meter kit, Comms type, 3 CVT, 1500 A, 15 in. circumference, 3 ft lead
EMC-3N-15M-10	Energy meter kit, Comms type, 3 CVT, 1500 A, 15 in. circumference, 10 ft lead
EMC-3N-24M-03	Energy meter kit, Comms type, 3 CVT, 2400 A, 15 in. circumference, 3 ft lead
EMC-3N-24M-10	Energy meter kit, Comms type, 3 CVT, 2400 A, 15 in. circumference, 10 ft lead
EMC-3N-24L-03	Energy meter kit, Comms type, 3 CVT, 2400 A, 24 in. circumference, 3 ft lead
EMC-3N-24L-10	Energy meter kit, Comms type, 3 CVT, 2400 A, 24 in. circumference, 10 ft lead
EMC-3N-60G-03	Energy meter kit, Comms type, 3 CVT, 6000 A, 36 in. circumference, 3 ft lead
EMC-3N-60G-10	Energy meter kit, Comms type, 3 CVT, 6000 A, 36 in. circumference, 10 ft lead
EMC-2N-03S-03	Energy meter kit, Comms type, 2 CVT, 300 A, 9 in. circumference, 3 ft lead
EMC-2N-03S-10	Energy meter kit, Comms type, 2 CVT, 300 A, 9 in. circumference, 10 ft lead
EMC-2N-08S-03	Energy meter kit, Comms type, 2 CVT, 800 A, 9 in. circumference, 3 ft lead
EMC-2N-08S-10	Energy meter kit, Comms type, 2 CVT, 800 A, 9 in. circumference, 10 ft lead
EMC-2N-08M-03	Energy meter kit, Comms type, 2 CVT, 800 A, 15 in. circumference, 3 ft lead
EMC-2N-08M-10	Energy meter kit, Comms type, 2 CVT, 800 A, 15 in. circumference, 10 ft lead

Order codes for individual components

Select a product from Table 6, Table 8, and Table 9 for single CVT applications, or applications where you require the EMPULSE (analog) meter. If you are using the EMPULSE meter, order the required CVT with the meter. See Table 5, Table 6, and Table 8 for more information.

Table 6: Meter order codes

Order code	Description
EMPULSE	Energy meter, Pulse type, includes no CVT
EMCOMMS	Energy meter, Comms type, includes no CVT

Table 7: CVT nomenclature three-phase kit and individual coils

		ROG	-	03S	-	03	-	KIT
Rogwski style coil								
Amperes and CVT	03S (300 A, 9 in.) 08S (800 A, 9 in.) 08M (800 A, 15 in.) 15S (1500 A, 9 in.) 15M (1500 A, 15 in.) 24M (2400 A, 15 in.) 24L (2400 A, 24 in.) 60G (6000 A, 36 in.)							
CVT lead length	03 (3 ft) 06 (6 ft) 10 (10 ft)							
CVT color	KIT (black, red, blue) BLK (black) RED (red) BLU (blue)							

Table 8: Order codes for CVT three-phase kit (Part 1 of 2)

Order code	Description
ROG-03S-03-KIT	CVT kit, 300 A, 9 in. circumference, 3 ft leads, black, red, blue
ROG-03S-06-KIT	CVT kit, 300 A, 9 in. circumference, 6 ft leads, black, red, blue
ROG-03S-10-KIT	CVT kit, 300 A, 9 in. circumference, 10 ft leads, black, red, blue
ROG-08S-03-KIT	CVT kit, 800 A, 9 in. circumference, 3 ft leads, black, red, blue
ROG-08S-06-KIT	CVT kit, 800 A, 9 in. circumference, 6 ft leads, black, red, blue
ROG-08S-10-KIT	CVT kit, 800 A, 9 in. circumference, 10 ft leads, black, red, blue
ROG-08M-03-KIT	CVT kit, 800 A, 15 in. circumference, 3 ft leads, black, red, blue
ROG-08M-06-KIT	CVT kit, 800 A, 15 in. circumference, 6 ft leads, black, red, blue
ROG-08M-10-KIT	CVT kit, 800 A, 15 in. circumference, 10 ft leads, black, red, blue
ROG-15S-03-KIT	CVT kit, 1500 A, 9 in. circumference, 3 ft leads, black, red, blue
ROG-15S-06-KIT	CVT kit, 1500 A, 9 in. circumference, 6 ft leads, black, red, blue
ROG-15S-10-KIT	CVT kit, 1500 A, 9 in. circumference, 10 ft leads, black, red, blue
ROG-15M-03-KIT	CVT kit, 1500 A, 15 in. circumference, 3 ft leads, black, red, blue
ROG-15M-06-KIT	CVT kit, 1500 A, 15 in. circumference, 6 ft leads, black, red, blue
ROG-15M-10-KIT	CVT kit, 1500 A, 15 in. circumference, 10 ft leads, black, red, blue
ROG-24M-03-KIT	CVT kit, 2400 A, 15 in. circumference, 3 ft leads, black, red, blue
ROG-24M-06-KIT	CVT kit, 2400 A, 15 in. circumference, 6 ft leads, black, red, blue
ROG-24M-10-KIT	CVT kit, 2400 A, 15 in. circumference, 10 ft leads, black, red, blue
ROG-24L-03-KIT	CVT kit, 2400 A, 24 in. circumference, 3 ft leads, black, red, blue
ROG-24L-06-KIT	CVT kit, 2400 A, 24 in. circumference, 6 ft leads, black, red, blue

Table 8: Order codes for CVT three-phase kit (Part 2 of 2)

ROG-24L-10-KIT	CVT kit, 2400 A, 24 in. circumference, 10 ft leads, black, red, blue
ROG-60G-03-KIT	CVT kit, 6000 A, 36 in. circumference, 3 ft leads, black, red, blue
ROG-60G-06-KIT	CVT kit, 6000 A, 36 in. circumference, 6 ft leads, black, red, blue
ROG-60G-10-KIT	CVT kit, 6000 A, 36 in. circumference, 10 ft leads, black, red, blue

Table 9: Order codes for single CVT (Part 1 of 2)

Order code	Description
ROG-03S-03-BLK	CVT, 300 A, 9 in. circumference, 3 ft lead, black
ROG-03S-06-BLK	CVT, 300 A, 9 in. circumference, 6 ft lead, black
ROG-03S-10-BLK	CVT, 300 A, 9 in. circumference, 10 ft lead, black
ROG-03S-03-RED	CVT, 300 A, 9 in. circumference, 3 ft lead, red
ROG-03S-06-RED	CVT, 300 A, 9 in. circumference, 6 ft lead, red
ROG-03S-10-RED	CVT, 300 A, 9 in. circumference, 10 ft lead, red
ROG-03S-03-BLU	CVT, 300 A, 9 in. circumference, 3 ft lead, blue
ROG-03S-06-BLU	CVT, 300 A, 9 in. circumference, 6 ft lead, blue
ROG-03S-10-BLU	CVT, 300 A, 9 in. circumference, 10 ft lead, blue
ROG-08S-03-BLK	CVT, 800 A, 9 in. circumference, 3 ft lead, black
ROG-08S-06-BLK	CVT, 800 A, 9 in. circumference, 6 ft lead, black
ROG-08S-10-BLK	CVT, 800 A, 9 in. circumference, 10 ft lead, black
ROG-08S-03-RED	CVT, 800 A, 9 in. circumference, 3 ft lead, red
ROG-08S-06-RED	CVT, 800 A, 9 in. circumference, 6 ft lead, red
ROG-08S-10-RED	CVT, 800 A, 9 in. circumference, 10 ft lead, red
ROG-08S-03-BLU	CVT, 800 A, 9 in. circumference, 3 ft lead, blue
ROG-08S-06-BLU	CVT, 800 A, 9 in. circumference, 6 ft lead, blue
ROG-08S-10-BLU	CVT, 800 A, 9 in. circumference, 10 ft lead, blue
ROG-08M-03-BLK	CVT, 800 A, 15 in. circumference, 3 ft lead, black
ROG-08M-06-BLK	CVT, 800 A, 15 in. circumference, 6 ft lead, black
ROG-08M-10-BLK	CVT, 800 A, 15 in. circumference, 10 ft lead, black
ROG-08M-03-RED	CVT, 800 A, 15 in. circumference, 3 ft lead, red
ROG-08M-06-RED	CVT, 800 A, 15 in. circumference, 6 ft lead, red
ROG-08M-10-RED	CVT, 800 A, 15 in. circumference, 10 ft lead, red
ROG-08M-03-BLU	CVT, 800 A, 15 in. circumference, 3 ft lead, blue
ROG-08M-06-BLU	CVT, 800 A, 15 in. circumference, 6 ft lead, blue
ROG-08M-10-BLU	CVT, 800 A, 15 in. circumference, 10 ft lead, blue
ROG-15S-03-BLK	CVT, 1500 A, 9 in. circumference, 3 ft lead, black
ROG-15S-06-BLK	CVT, 1500 A, 9 in. circumference, 6 ft lead, black
ROG-15S-10-BLK	CVT, 1500 A, 9 in. circumference, 10 ft lead, black
ROG-15S-03-RED	CVT, 1500 A, 9 in. circumference, 3 ft lead, red
ROG-15S-06-RED	CVT, 1500 A, 9 in. circumference, 6 ft lead, red
ROG-15S-10-RED	CVT, 1500 A, 9 in. circumference, 10 ft lead, red
ROG-15S-03-BLU	CVT, 1500 A, 9 in. circumference, 3 ft lead, blue
ROG-15S-06-BLU	CVT, 1500 A, 9 in. circumference, 6 ft lead, blue

Table 9: Order codes for single CVT (Part 2 of 2)

ROG-15S-10-BLU	CVT, 1500 A, 9 in. circumference, 10 ft lead, blue
ROG-15M-03-BLK	CVT, 1500 A, 15 in. circumference, 3 ft lead, black
ROG-15M-06-BLK	CVT, 1500 A, 15 in. circumference, 6 ft lead, black
ROG-15M-10-BLK	CVT, 1500 A, 15 in. circumference, 10 ft lead, black
ROG-15M-03-RED	CVT, 1500 A, 15 in. circumference, 3 ft lead, red
ROG-15M-06-RED	CVT, 1500 A, 15 in. circumference, 6 ft lead, red
ROG-15M-10-RED	CVT, 1500 A, 15 in. circumference, 10 ft lead, red
ROG-15M-03-BLU	CVT, 1500 A, 15 in. circumference, 3 ft lead, blue
ROG-15M-06-BLU	CVT, 1500 A, 15 in. circumference, 6 ft lead, blue
ROG-15M-10-BLU	CVT, 1500 A, 15 in. circumference, 10 ft lead, blue
ROG-24M-03-BLK	CVT, 2400 A, 15 in. circumference, 3 ft lead, black
ROG-24M-06-BLK	CVT, 2400 A, 15 in. circumference, 6 ft lead, black
ROG-24M-10-BLK	CVT, 2400 A, 15 in. circumference, 10 ft lead, black
ROG-24M-03-RED	CVT, 2400 A, 15 in. circumference, 3 ft lead, red
ROG-24M-06-RED	CVT, 2400 A, 15 in. circumference, 6 ft lead, red
ROG-24M-10-RED	CVT, 2400 A, 15 in. circumference, 10 ft lead, red
ROG-24M-03-BLU	CVT, 2400 A, 15 in. circumference, 3 ft lead, blue
ROG-24M-06-BLU	CVT, 2400 A, 15 in. circumference, 6 ft lead, blue
ROG-24M-10-BLU	CVT, 2400 A, 15 in. circumference, 10 ft lead, blue
ROG-24L-03-BLK	CVT, 2400 A, 24 in. circumference, 3 ft lead, black
ROG-24L-06-BLK	CVT, 2400 A, 24 in. circumference, 6 ft lead, black
ROG-24L-10-BLK	CVT, 2400 A, 24 in. circumference, 10 ft lead, black
ROG-24L-03-RED	CVT, 2400 A, 24 in. circumference, 3 ft lead, red
ROG-24L-06-RED	CVT, 2400 A, 24 in. circumference, 6 ft lead, red
ROG-24L-10-RED	CVT, 2400 A, 24 in. circumference, 10 ft lead, red
ROG-24L-03-BLU	CVT, 2400 A, 24 in. circumference, 3 ft lead, blue
ROG-24L-06-BLU	CVT, 2400 A, 24 in. circumference, 6 ft lead, blue
ROG-24L-10-BLU	CVT, 2400 A, 24 in. circumference, 10 ft lead, blue
ROG-60G-03-BLK	CVT, 6000 A, 36 in. circumference, 3 ft lead, black
ROG-60G-06-BLK	CVT, 6000 A, 36 in. circumference, 6 ft lead, black
ROG-60G-10-BLK	CVT, 6000 A, 36 in. circumference, 10 ft lead, black
ROG-60G-03-RED	CVT, 6000 A, 36 in. circumference, 3 ft lead, red
ROG-60G-06-RED	CVT, 6000 A, 36 in. circumference, 6 ft lead, red
ROG-60G-10-RED	CVT, 6000 A, 36 in. circumference, 10 ft lead, red
ROG-60G-03-BLU	CVT, 6000 A, 36 in. circumference, 3 ft lead, blue
ROG-60G-06-BLU	CVT, 6000 A, 36 in. circumference, 6 ft lead, blue
ROG-60G-10-BLU	CVT, 6000 A, 36 in. circumference, 10 ft lead, blue

Fuse option

The voltage lead does not require fusing when the lead length is 10 ft or less. Use the fuse kit only if you need to modify the lead length of the standard product during installation. See Table 10 for order codes for the fuse option. Refer to UL 240.21 for more detail.

Table 10: Order codes for fuse option

Order code	Description
ROGFUSE-KIT	CVT fuse kit, black, red, blue
ROGFUSE-BLK	CVT fuse kit, black
ROGFUSE-RED	CVT fuse kit, red
ROGFUSE-BLU	CVT fuse kit, blue

Technical Specifications

EMCOMMS and EMPULSE Electrical Energy Meters

Power supply input		12 - 30 VDC/24 VAC, 100 mA max
Pulse outputs	Dual outputs	Import and export energy outputs
	Type	Solid state dry contact
	Specifications	N.O., 300 mA max, 40 V max
	Pulse scaling	0.01, 0.1, 1, 10, 100, 1 kWh/Pulse
RS-485 output	RS-485	2-wire, BACnet MS/TP, Modbus RTU
	Baud rates	9600, 19200, 38400, 57600, 76800, 115200
	RS-485 loading	1/4 unit
Pulse inputs	Dual inputs	3.5 +/- 0.5 VDC, short circuit current is 10 mA max
	Pulse rate	50 Hz (default), configurable up to 500 Hz
	Pulse active	<100 ohms
	Pulse undefined	100 - 1000 ohms
	Pulse idle	<1000 ohms
Service Types	Configurations	1 phase, 2 phase, 3-phase wye (4-wire), 3-phase delta (3-wire)
	Voltages	90 V_{L-N} through 600 V_{L-L}
	Frequency	45 - 65 Hz
Performance	Accuracy	1% for V, A, kW, kVAR, kVA
Current or voltage transcducer	Small rope circumference	9 in.
	Medium rope circumference	15 in.
	Large rope circumference	24 in.
	Grande rope circumference	36 in.
	300 A Operating range	+/- 1% 30 - 300 A (+/-3% > 10 A)
	800 A Operating range	+/-1% 30 - 800 A (+/-3%>10 A)
	1500 A Operating range	+/-1% 30 - 1500 A (+/-3%>10 A)
	2400 A Operating range	+/-1% 50 - 2400 A (+/-3%>15 A)
	6000 A Operating range	+/-1% 120 - 6000 A (+/-3%>40 A)
Operating environment	Temperature	-4°F to 140°F (-20°C to 60°C)
	Humidity	0 - 95% non-condensing
Meter enclosure	Material	Polycarbonate/ABS
	Dimensions	4.1 in. height x 1.8 in. width x 0.9 in. depth

EMCOMMS and EMPULSE Electrical Energy Meters

Compliance CE	United States	UL Listed, File E500445
	Canada	cUL Listed, File E500445
	Europe	CE Mark – Johnson Controls declares that this product is in compliance with the essential requirements and other relevant provisions of the EMC Directive.

Building Technologies & Solutions
507 E. Michigan Street, Milwaukee, WI 53202

Metasys® and Johnson Controls® are registered trademarks of Johnson Controls.
All other marks herein are the marks of their respective owners. © 2019 Johnson Controls.