# Product data sheet

Specifications



## Harmony, enclosure, dark grey lid with light grey base, 1 opening, UL/ CSA certified

XALD01H7

**Product availability: Stock - Normally stocked in distribution facility**

## Main

| | |
|---|---|
| **Range of Product** | Harmony XALD |
| **Product or Component Type** | Empty control station |
| **Device short name** | XALD |
| **Product destination** | For XB5 Ø 22 mm control and signalling units |
| **Number of cut-out** | 1 cut-out |
| **Colour of base of enclosure** | Light grey RAL 7035) |
| **Colour of cover** | Dark grey RAL 7016) |
| **Material** | Polycarbonate |
| **Cable entry** | 1 knock-out for cable entry 0.6 in (14 mm)<br>2 knock-outs for Pg 13 cable gland and ISO M20 0.5 in (12 mm) |
| **IP degree of protection** | IP66 IEC 60529<br>IP67<br>IP69<br>IP69K |

## Complementary

| | |
|---|---|
| **Assembly style** | For customer assembly |
| **Number of horizontal rows** | 1 |
| **Number of vertical rows** | 1 |
| **Net Weight** | 0.300 lb(US) (0.136 kg) |
| **Resistance to high pressure washer** | 1015.3 psi (7000000 Pa) 131 °F (55 °C) 0.1 m |
| **Mounting of block** | Rear mounting<br>Front mounting |
| **electrical composition code** | MF2<br>MF1<br>MR1<br>PR1<br>SF1<br>SR2<br>SR1<br>PF1<br>PF2<br>SF2 |
| **Main group** | 1 cut-out |
| **Group of product** | UL-CSA grey |

## Environment

| | |
|---|---|
| **Protective treatment** | TH |

Price is “List Price” and may be subject to a trade discount – check with your local distributor or retailer for actual price.

Disclaimer: This documentation is not intended as a substitute for and is not to be used for determining suitability or reliability of these products for specific user applications

| | |
|---|---|
| **Ambient Air Temperature for Storage** | -40…158 °F (-40…70 °C) |
| **Ambient Air Temperature for Operation** | -40…158 °F (-40…70 °C) |
| **Overvoltage category** | Class II conforming to IEC 60536 |
| **NEMA degree of protection** | NEMA 13<br>NEMA 4X |
| **IK degree of protection** | IK03 conforming to IEC 62262 |
| **Standards** | IEC 60947-5-5<br>IEC 60947-5-1<br>CSA C22.2 No 14<br>JIS C8201-5-1<br>IEC 60947-5-4<br>IEC 60947-1<br>UL 508<br>JIS C8201-1 |
| **Product Certifications** | UL<br>CSA |

## Ordering and shipping details

| | |
|---|---|
| **Category** | US10CS222475 |
| **Discount Schedule** | 0CS2 |
| **GTIN** | 3389110114911 |
| **Returnability** | Yes |
| **Country of origin** | CZ |

## Packing Units

| | |
|---|---|
| **Unit Type of Package 1** | PCE |
| **Nbr. of units in pkg.** | 1 |
| **Package 1 Height** | 2.756 in (7.000 cm) |
| **Package 1 Width** | 2.756 in (7.000 cm) |
| **Package 1 Length** | 3.031 in (7.700 cm) |
| **Package weight(Lbs)** | 4.162 oz (118.000 g) |
| **Unit Type of Package 2** | S03 |
| **Number of Units in Package 2** | 40 |
| **Package 2 Height** | 11.811 in (30.000 cm) |
| **Package 2 Width** | 11.811 in (30.000 cm) |
| **Package 2 Length** | 15.748 in (40.000 cm) |
| **Package 2 Weight** | 11.422 lb(US) (5.181 kg) |
| **Unit Type of Package 3** | P06 |
| **Number of Units in Package 3** | 320 |
| **Package 3 Height** | 29.528 in (75.000 cm) |
| **Package 3 Width** | 23.622 in (60.000 cm) |
| **Package 3 Length** | 31.496 in (80.000 cm) |
| **Package 3 Weight** | 117.383 lb(US) (53.244 kg) |

## Contractual warranty

| | |
|---|---|
| **Warranty (in months)** | 18 |

## Environmental Data

Schneider Electric aims to achieve Net Zero status by 2050 through supply chain partnerships, lower impact materials, and circularity via our ongoing “Use Better, Use Longer, Use Again” campaign to extend product lifetimes and recyclability.

Environmental Data explained >

How we assess product sustainability >

### Environmental footprint

| | |
|---|---|
| Total lifecycle Carbon footprint | **0.9 kg CO2 eq.** |
| Carbon footprint of the manufacturing phase [A1 to A3] | **0.9 kg CO2 eq.** |
| Carbon footprint of the distribution phase [A4] | **0 kg CO2 eq.** |
| Carbon footprint of the installation phase [A5] | **0 kg CO2 eq.** |
| Carbon footprint of the use phase [B2, B3, B4, B6] | **0 kg CO2 eq.** |
| Carbon footprint of the end-of-life phase [C1 to C4] | **0 kg CO2 eq.** |
| Environmental Disclosure | Product Environmental Profile |

## Use Better

### Materials and Substances

| | |
|---|---|
| Packaging made with recycled cardboard | **Yes** |
| Packaging without single use plastic | **Yes** |
| EU RoHS Directive | Compliant |
| REACh Regulation | Free of Substances of Very High Concern above the threshold |
| California proposition 65 | **WARNING: This product can expose you to chemicals including: Lead and lead compounds, which is known to the State of California to cause cancer and birth defects or other reproductive harm. For more information go to www.P65Warnings.ca.gov** |

## Use Again

### Repack and remanufacture

| | |
|---|---|
| Recyclability potential, in % | **18** |
| Circularity Profile | End of Life Information |
| Take-back | **No** |

## Dimensions Drawings

### Dimensions

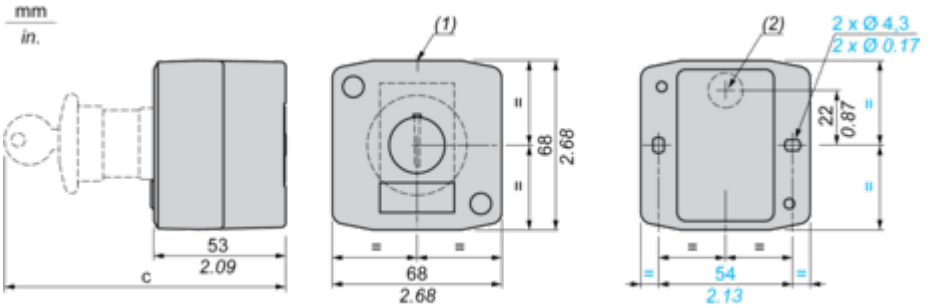


**(1)** 2 knock-outs for Pg 13.5 cable gland, maximum capacity 12 mm/0.47 in.
**(2)** Knock-out for cable entry, maximum capacity 14 mm/0.55 in.

| Control station fitted with: | c in mm | c in in. |
|---|---|---|
| Flush pushbutton | 62 | 2.44 |
| Pilot light | 64 | 2.52 |
| Illuminated pushbutton | 65.5 | 2.58 |
| Projecting pushbutton | 66 | 2.60 |
| Selector switch | 80 | 3.15 |
| Mushroom head pushbutton | 91.5 | 3.58 |
| Latching mushroom head Emergency stop pushbutton with key | 115 | 4.53 |
| Key switch | 105.5 | 4.15 |

Image of product / Alternate images

**Alternative**








