Product data sheet

Specifications



Empty control station, Harmony XALD, XALK, plastic, dark grey lid, light grey base, 3 cut out, UL CSA certified

XALD03H7

Product availability: Stock - Normally stocked in distribution facility

Main

Range of Product	Harmony XALD
Product or Component Type	Empty control station
Device short name	XALD
Product destination	For XB5 Ø 22 mm control and signalling units
Number of cut-out	3 cut-outs
Colour of base of enclosure	Light grey RAL 7035)
Colour of cover	Dark grey RAL 7016)
Material	Polycarbonate
Cable entry	2 knock-outs for cable entry 0.6 in (14 mm) 2 knock-outs for Pg 13 cable gland and ISO M20 0.5 in (12 mm)
IP degree of protection	IP66 IEC 60529 IP67 IP69 IP69K

Complementary

Assembly style	For customer assembly
Number of horizontal rows	1
Number of vertical rows	3
Net Weight	0.525 lb(US) (0.238 kg)
Resistance to high pressure washer	1015.3 psi (7000000 Pa) 131 °F (55 °C) 0.1 m
Mounting of block	Rear mounting Front mounting
electrical composition code	PF2 MR1 SF1 MF2 SF2 SR2 SR1 PR1 PF1 MF1
Main group	3 cut-outs
Group of product	UL-CSA grey

Environment

Protective treatment	TH

Price is “List Price” and may be subject to a trade discount – check with your local distributor or retailer for actual price.

Disclaimer: This documentation is not intended as a substitute for and is not to be used for determining suitability or reliability of these products for specific user applications

Ambient Air Temperature for Storage	-40…158 °F (-40…70 °C)
Ambient Air Temperature for Operation	-40…158 °F (-40…70 °C)
Overvoltage category	Class II conforming to IEC 60536
NEMA degree of protection	NEMA 13 NEMA 4X
IK degree of protection	IK03 conforming to IEC 62262
Standards	IEC 60947-5-4 CSA C22.2 No 14 IEC 60947-5-1 JIS C8201-5-1 IEC 60947-1 IEC 60947-5-5 UL 508 JIS C8201-1
Product Certifications	UL CSA

Ordering and shipping details

Category	US10CS222475
Discount Schedule	0CS2
GTIN	3389110114942
Returnability	Yes
Country of origin	CZ

Packing Units

Unit Type of Package 1	PCE
Nbr. of units in pkg.	1
Package 1 Height	3.031 in (7.700 cm)
Package 1 Width	2.756 in (7.000 cm)
Package 1 Length	5.354 in (13.600 cm)
Package weight(Lbs)	7.937 oz (225.000 g)
Unit Type of Package 2	S03
Number of Units in Package 2	30
Package 2 Height	11.811 in (30.000 cm)
Package 2 Width	11.811 in (30.000 cm)
Package 2 Length	15.748 in (40.000 cm)
Package 2 Weight	15.944 lb(US) (7.232 kg)
Unit Type of Package 3	P06
Number of Units in Package 3	240
Package 3 Height	30.315 in (77.000 cm)
Package 3 Width	23.622 in (60.000 cm)
Package 3 Length	31.496 in (80.000 cm)
Package 3 Weight	148.691 lb(US) (67.445 kg)

Contractual warranty

Warranty (in months)	18

Environmental Data

Schneider Electric aims to achieve Net Zero status by 2050 through supply chain partnerships, lower impact materials, and circularity via our ongoing “Use Better, Use Longer, Use Again” campaign to extend product lifetimes and recyclability.

Environmental Data explained >

How we assess product sustainability >

Environmental footprint

Total lifecycle Carbon footprint	**2 kg CO2 eq.**
Carbon footprint of the manufacturing phase [A1 to A3]	**1 kg CO2 eq.**
Carbon footprint of the distribution phase [A4]	**0.2 kg CO2 eq.**
Carbon footprint of the installation phase [A5]	**0 kg CO2 eq.**
Carbon footprint of the use phase [B2, B3, B4, B6]	**0 kg CO2 eq.**
Carbon footprint of the end-of-life phase [C1 to C4]	**0.5 kg CO2 eq.**
Environmental Disclosure	**Product Environmental Profile**

Use Better

Materials and Substances

Packaging made with recycled cardboard	**Yes**
Packaging without single use plastic	**Yes**
EU RoHS Directive	**Compliant**
REACh Regulation	**Free of Substances of Very High Concern above the threshold**
California proposition 65	**WARNING: This product can expose you to chemicals including: Lead and lead compounds, which is known to the State of California to cause cancer and birth defects or other reproductive harm. For more information go to www.P65Warnings.ca.gov**

Use Again

Repack and remanufacture

Recyclability potential, in %	**18**
Circularity Profile	**End of Life Information**
Take-back	**No**

Dimensions Drawings

Dimensions

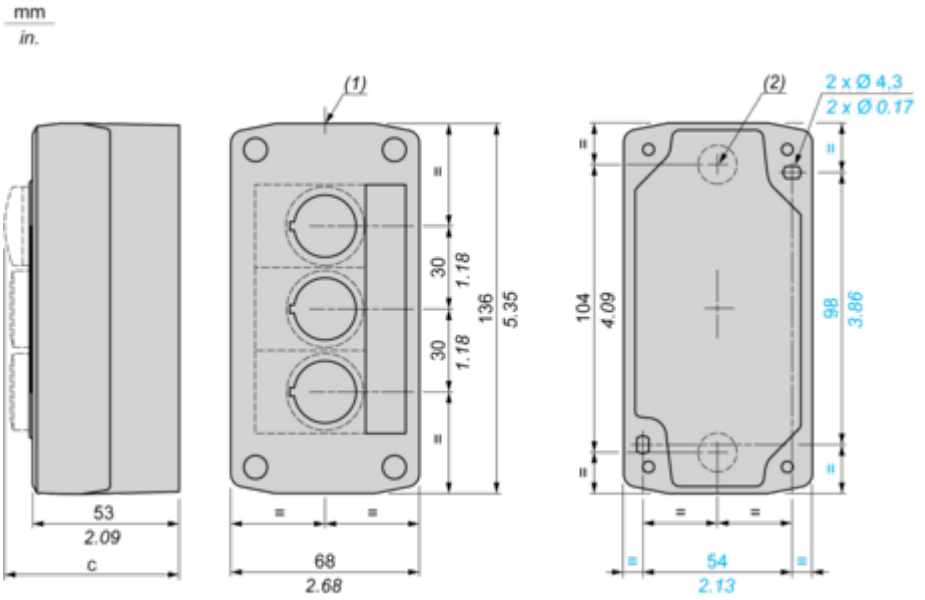

(1) 2 knock-outs for Pg 13.5 cable gland, maximum capacity 12 mm/0.47 in.
(2) Knock-out for cable entry, maximum capacity 14 mm/0.55 in.

Control station fitted with:	c in mm	c in in.
Flush pushbutton	62	2.44
Illuminated pushbutton	64	2.52
Pilot light	65.5	2.58
Projecting pushbutton	66	2.60
Selector switch	80	3.15
Key switch	105.5	4.15

Image of product / Alternate images

Alternative








CM 12
PG 13,5
ISO 20


CM 12
PG 13,5
150 20


XAL