Product data sheet

Specifications



Complete control station, Harmony XALD, dark grey, 1 red mushroom head pushbutton, 40mm, spring return, 1NC, marked STOP

XALD164H29H7

Product availability: Stock - Normally stocked in distribution facility

Main

Range of Product	Harmony XALD
Product or Component Type	Complete control station
Device short name	XALD
Product destination	For XB5 Ø 22 mm control and signalling units
Control station application	Stop function
Colour of base of enclosure	Light grey RAL 7035)
Colour of cover	Dark grey RAL 7016)
Material	Polycarbonate
Operator profile	1 mushroom head push-button
Operators description	Red "STOP" 1 NC
Control station composition	1 mushroom head Ø 40 mm push-button, red 1 NC STOP
Marking location	Marking on legend holder
Contact operation	Slow-break

Complementary

AC control voltage 50 HZ	110…230 V
Cable entry	1 knock-out for cable entry 0.6 in (14 mm) 2 knock-outs for Pg 13 cable gland and ISO M20 0.5 in (12 mm)
AC control voltage 60 HZ	110…230 V
Net Weight	0.401 lb(US) (0.182 kg)
DC control voltage	24 V
Resistance to high pressure washer	1015.3 psi (7000000 Pa) 131 °F (55 °C) 0.1 m
Number of command positions	1
Number of indicator lights	0
Number of push buttons	0
Positive opening	With IEC 60947-5-1 appendix K
Operating travel	0.06 in (1.5 mm) NC changing electrical state) 0.2 in (4.3 mm) total travel)
Operating force	3.5 N NC changing electrical state
Mechanical durability	5000000 cycles
Number of selector switches	0

Price is “List Price” and may be subject to a trade discount – check with your local distributor or retailer for actual price.

Disclaimer: This documentation is not intended as a substitute for and is not to be used for determining suitability or reliability of these products for specific user applications

Connections - terminals	Screw clamp terminals, <= 2 x 1.5 mm² with cable end IEC 60947-1 Screw clamp terminals, >= 1 x 0.22 mm² without cable end IEC 60947-1
Tightening torque	7.08…10.6 lbf.in (0.8…1.2 N.m) IEC 60947-1
Number of key switches	0
Shape of screw head	Cross Philips no 1 Cross pozidriv No 1 Slotted flat Ø 4 mm Slotted flat Ø 5.5 mm
Contacts material	Silver alloy (Ag/Ni)
Short-circuit protection	10 A cartridge fuse gG IEC 60947-5-1
[Ith] conventional free air thermal current	10 A IEC 60947-5-1
[Ui] rated insulation voltage	600 V 3)IEC 60947-1
Number of mushroom-shaped push-buttons	1
[Uimp] rated impulse withstand voltage	6 kV IEC 60947-1
[Ie] rated operational current	6 A 120 V, AC-15, A600 IEC 60947-5-1 3 A 240 V, AC-15, A600 IEC 60947-5-1 1.2 A 600 V, AC-15, A600 IEC 60947-5-1 0.55 A 125 V, DC-13, Q600 IEC 60947-5-1 0.27 A 250 V, DC-13, Q600 IEC 60947-5-1 0.1 A 600 V, DC-13, Q600 IEC 60947-5-1
Electrical durability	1000000 cycles, AC-15, 2 A 230 V 3600 cyc/h 0.5 IEC 60947-5-1 appendix C 1000000 cycles, AC-15, 3 A 120 V 3600 cyc/h 0.5 IEC 60947-5-1 appendix C 1000000 cycles, AC-15, 4 A 24 V 3600 cyc/h 0.5 IEC 60947-5-1 appendix C 1000000 cycles, DC-13, 0.2 A 110 V 3600 cyc/h 0.5 IEC 60947-5-1 appendix C 1000000 cycles, DC-13, 0.5 A 24 V 3600 cyc/h 0.5 IEC 60947-5-1 appendix C
Electrical reliability	Λ < 10exp(-6) 5 V 1 mA IEC 60947-5-4 Λ < 10exp(-8) 17 V 5 mA IEC 60947-5-4
Emergency Power Off (EPO)	No
Number of contacts as normally closed contact	1
Number of contacts as normally open contact	0
Number of contacts as change-over contact	0
Housing material	Plastic
Housing Colour	Grey
colour of cover	Dark grey

Environment

Protective treatment	TH
Ambient Air Temperature for Storage	-40…158 °F (-40…70 °C)
Ambient Air Temperature for Operation	-40…158 °F (-40…70 °C)
Overvoltage category	Class II conforming to IEC 60536
IP degree of protection	IP66 IEC 60529 IP69 IP69K
NEMA degree of protection	NEMA 13 NEMA 4X
IK degree of protection	IK03 conforming to IEC 62262

Standards	JIS C8201-5-1 IEC 60947-5-5 UL 508 CSA C22.2 No 14 IEC 60947-5-4 IEC 60947-5-1 IEC 60947-1 JIS C8201-1
Product Certifications	CSA UL Listed
Vibration resistance	5 gn (f= 12…500 Hz) conforming to IEC 60068-2-6
Shock resistance	10 gn 11 ms) half sine wave acceleration IEC 60068-2-27
IP Degree of Protection	IP66/IP69/IP69K
NEMA Degree of Protection	NEMA 4X/13

Ordering and shipping details

Category	US10CS222475
Discount Schedule	0CS2
GTIN	3389119413831
Returnability	Yes
Country of origin	CZ

Packing Units

Unit Type of Package 1	PCE
Nbr. of units in pkg.	1
Package 1 Height	2.8 in (7.0 cm)
Package 1 Width	2.8 in (7.0 cm)
Package 1 Length	3.8 in (9.7 cm)
Package weight(Lbs)	6.0 oz (169.0 g)

Contractual warranty

Warranty (in months)	18

Environmental Data

Schneider Electric aims to achieve Net Zero status by 2050 through supply chain partnerships, lower impact materials, and circularity via our ongoing “Use Better, Use Longer, Use Again” campaign to extend product lifetimes and recyclability.

Environmental Data explained >

How we assess product sustainability >

Environmental footprint

Total lifecycle Carbon footprint	**1 kg CO2 eq.**
Carbon footprint of the manufacturing phase [A1 to A3]	**0.9 kg CO2 eq.**
Carbon footprint of the distribution phase [A4]	**0.1 kg CO2 eq.**
Carbon footprint of the installation phase [A5]	**0 kg CO2 eq.**
Carbon footprint of the use phase [B2, B3, B4, B6]	**0 kg CO2 eq.**
Carbon footprint of the end-of-life phase [C1 to C4]	**0.3 kg CO2 eq.**
Environmental Disclosure	Product Environmental Profile

Use Better

Materials and Substances

Packaging made with recycled cardboard	**Yes**
Packaging without single use plastic	**Yes**
EU RoHS Directive	Compliant
REACh Regulation	Free of Substances of Very High Concern above the threshold

Use Again

Repack and remanufacture

Recyclability potential, in %	**18**
Circularity Profile	End of Life Information
Take-back	**No**
WEEE Label	**The product must be disposed on European Union markets following specific waste collection and never end up in rubbish bins.**

Dimensions Drawings

Dimensions

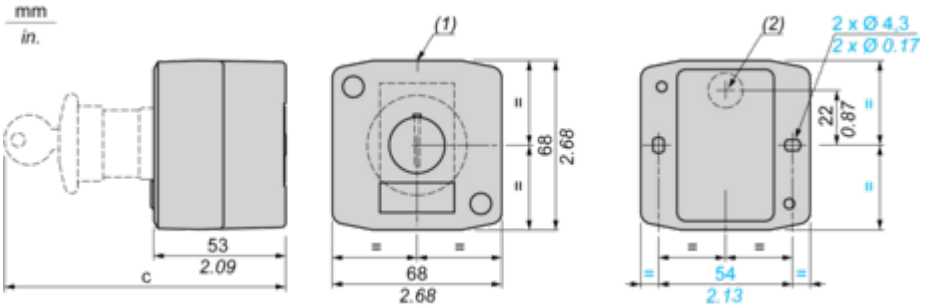

(1) 2 knock-outs for Pg 13.5 cable gland, maximum capacity 12 mm/0.47 in.
(2) Knock-out for cable entry, maximum capacity 14 mm/0.55 in.

Control station fitted with:	c in mm	c in in.
Flush pushbutton	62	2.44
Pilot light	64	2.52
Illuminated pushbutton	65.5	2.58
Projecting pushbutton	66	2.60
Selector switch	80	3.15
Mushroom head pushbutton	91.5	3.58
Latching mushroom head Emergency stop pushbutton with key	115	4.53
Key switch	105.5	4.15

Image of product / Alternate images

Alternative



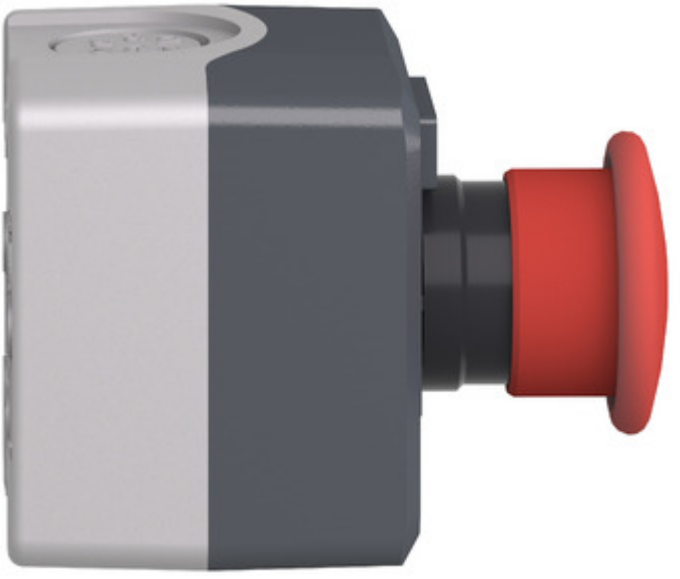


STOP



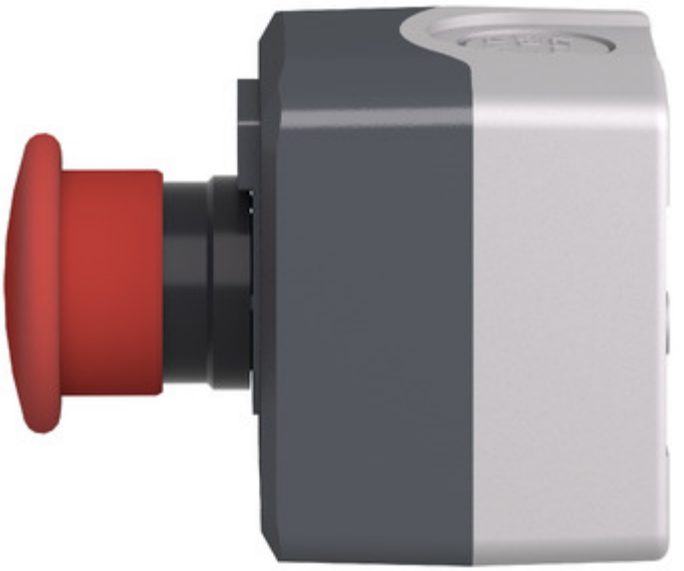


XAL
>PC<
2 Ø4.3
(2) DIA
54
(2 1/8")

Image of product in real life situation

