Product data sheet

Specifications

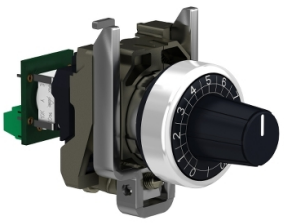

Complete potentiometer, Harmony XB4, metal, 22mm, 10K

XB4BD912R10K

Product availability: Stock - Normally stocked in distribution facility

Main

Range of Product	Harmony XB4
Product or Component Type	Potentiometer
Device short name	XB4
Head type	Standard
Device presentation	Complete product

Complementary

Bezel material	Chromium plated metal
Mounting diameter	0.9 in (22.5 mm)
Product Compatibility	Ø 6 mm shaft
Sale per indivisible quantity	1
CAD overall width	1.2 in (30 mm)
CAD overall height	1.9 in (47 mm)
CAD overall depth	3.2 in (82 mm)
Net Weight	0.209 lb(US) (0.095 kg)
Protective treatment	TH
Ambient Air Temperature for Storage	-40…158 °F (-40…70 °C)
Ambient Air Temperature for Operation	-40…158 °F (-40…70 °C)
Electrical shock protection class	Class II conforming to IEC 60536
IP degree of protection	IP66 IEC 60529 IP69 IEC 60529 IP69K IEC 60529
Resistance to high pressure washer	1015.3 psi (7000000 Pa) 131 °F (55 °C) 0.1 m
IK degree of protection	IK06 conforming to IEC 50102
Standards	UL 508 IEC 60947-1 CSA C22.2 No 14
Product Certifications	CSA BV UL Listed
Shape of signaling unit head	Round
Operator profile	knurled knob, with white)
[Us] rated supply voltage	<= 30 V AC <= 42 V DC
Rated power in W	1 W 158 °F (70 °C)

Price is “List Price” and may be subject to a trade discount – check with your local distributor or retailer for actual price.

Disclaimer: This documentation is not intended as a substitute for and is not to be used for determining suitability or reliability of these products for specific user applications

Precision of internal conversion resistor	+-10%
Potentiometer characteristic	Linear
Mechanical durability	50000 cycles
Ohmic value	10000 Ohm
Material	Cermet
Vibration resistance	5 gn (f= 2…500 Hz) conforming to IEC 60068-2-6
Shock resistance	30 gn 18 ms) half sine wave acceleration IEC 60068-2-27 50 gn 11 ms) half sine wave acceleration IEC 60068-2-27
Main group	Potentiometer
Group of product	Potentiometer knurled knob
Colour of marking	White

Environment

Enclosure Type	UL type 4X/13

Ordering and shipping details

Category	US10CS222468
Discount Schedule	0CS2
GTIN	3606480985010
Returnability	Yes
Country of origin	FR

Packing Units

Unit Type of Package 1	PCE
Nbr. of units in pkg.	1
Package 1 Height	2.087 in (5.300 cm)
Package 1 Width	1.693 in (4.300 cm)
Package 1 Length	3.465 in (8.800 cm)
Package weight(Lbs)	3.704 oz (105.000 g)
Unit Type of Package 2	S02
Number of Units in Package 2	40
Package 2 Height	5.9 in (15 cm)
Package 2 Width	11.8 in (30 cm)
Package 2 Length	15.7 in (40 cm)
Package 2 Weight	9.921 lb(US) (4.500 kg)

Contractual warranty

Warranty (in months)	18

Environmental Data

Schneider Electric aims to achieve Net Zero status by 2050 through supply chain partnerships, lower impact materials, and circularity via our ongoing “Use Better, Use Longer, Use Again” campaign to extend product lifetimes and recyclability.

Environmental Data explained >

How we assess product sustainability >

Environmental footprint

Total lifecycle Carbon footprint	**2 kg CO2 eq.**
Carbon footprint of the manufacturing phase [A1 to A3]	**1 kg CO2 eq.**
Carbon footprint of the distribution phase [A4]	**0 kg CO2 eq.**
Carbon footprint of the installation phase [A5]	**0 kg CO2 eq.**
Carbon footprint of the use phase [B2, B3, B4, B6]	**0.5 kg CO2 eq.**
Carbon footprint of the end-of-life phase [C1 to C4]	**0.2 kg CO2 eq.**
Environmental Disclosure	**Product Environmental Profile**

Use Better

Materials and Substances

Average percentage of recycled plastic content	**49 %**
Average percentage of recycled metal content	**19 %**
Packaging made with recycled cardboard	**Yes**
Packaging without single use plastic	**No**
SCIP Number	**Cdd05395-84df-4020-b628-2e5a7bfcca00**
EU RoHS Directive	**Compliant By Exemption**
REACh Regulation	**Reference contains Substances of Very High Concern above the threshold**
California proposition 65	**WARNING: This product can expose you to chemicals including: Nickel compounds, which is known to the State of California to cause cancer, and Di-isodecyl phthalate (DIDP), which is known to the State of California to cause birth defects or other reproductive harm. For more information go to www.P65Warnings.ca.gov**

Use Longer

Lifetime extension

Product repairability index	**A**

Use Again

Repack and remanufacture

Recyclability potential, in %	**86**
Circularity Profile	**End of Life Information**
Take-back	**No**

WEEE Label	The product must be disposed on European Union markets following specific waste collection and never end up in rubbish bins.

Dimensions Drawings

Dimensions

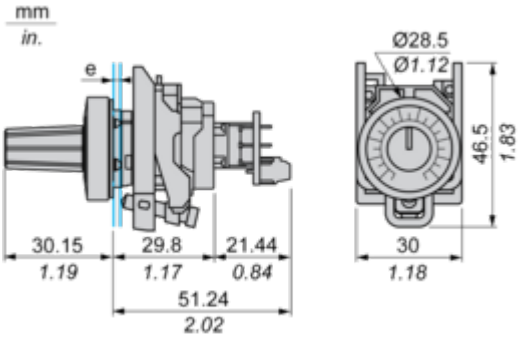

e: Panel thickness: 1 mm to 6 mm / 0.03 in. to 0.24 in

Mounting and Clearance

Panel Cut-out for Pushbuttons, Switches and Pilot Lights (Finished Holes, Ready for Installation)

Connection by Screw Terminals or Plug-in Connectors

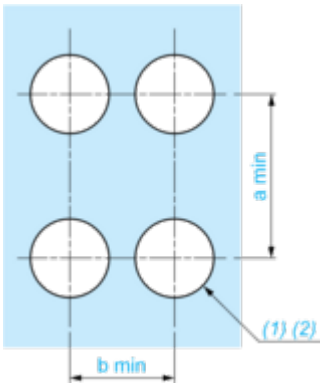

Connection by Faston Connectors

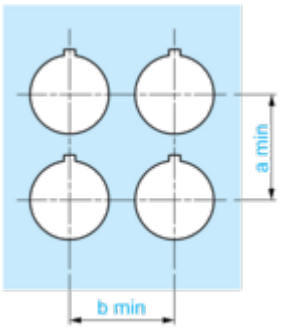

Connections	a in mm	a in in.	b in mm	b in in.
By screw clamp terminals or plug-in connector	40	1.57	30	1.18
By Faston connectors	45	1.77	32	1.26

Detail of Lug Recess

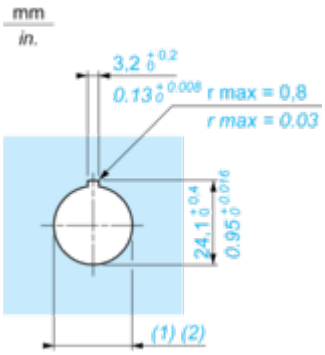

(1) Diameter on finished panel or support

(2) Ø22.5 mm recommended (Ø22.3 $_{0}^{+0.4}$) / Ø0.89 in. recommended (Ø0.88 in. $_{0}^{+0.016}$)

Image of product / Alternate images

Alternative



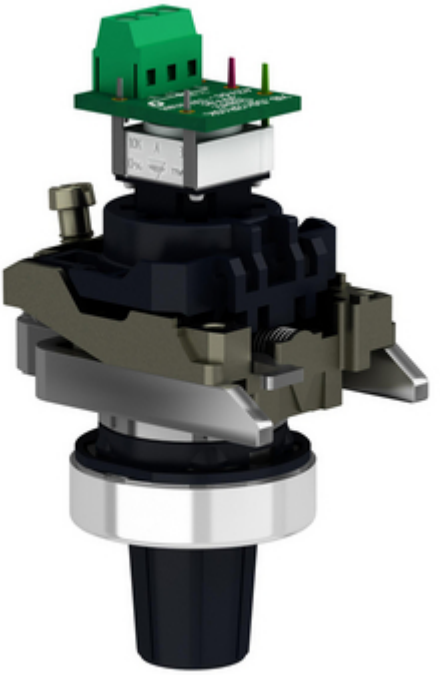

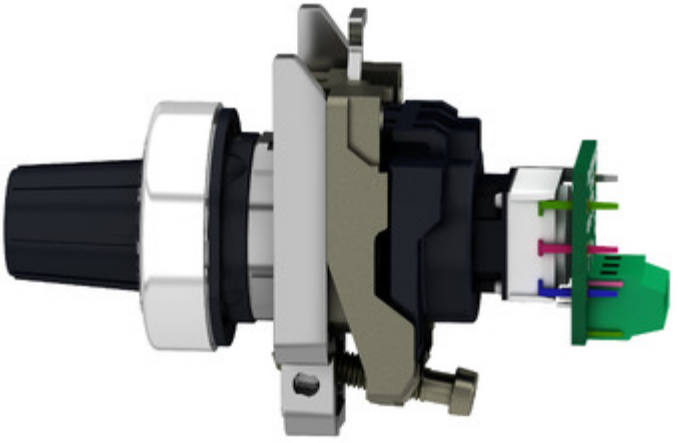


1
2
3
4
5
6
7
8
9
10

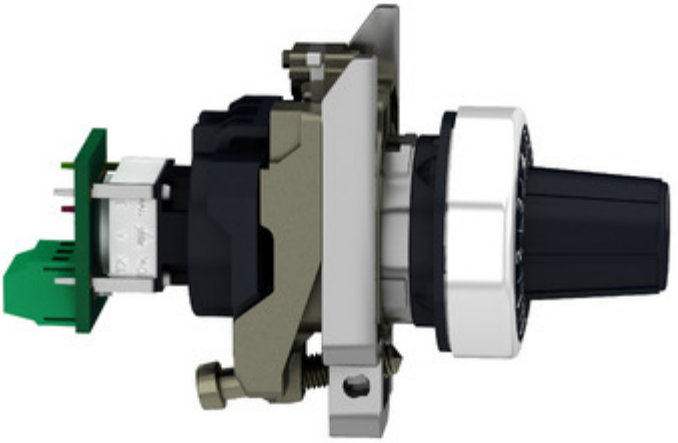


XB..D912R10K
Class2
30Vac
42Vdc - 1W max
CW
A
B
C
1
2
5
6