# Product data sheet

Specifications

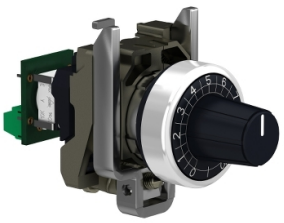

## Complete potentiometer, Harmony XB4, metal, 22mm, 4K7

XB4BD912R4K7

**Product availability: Stock - Normally stocked in distribution facility**

## Main

| | |
|---|---|
| **Range of Product** | Harmony XB4 |
| **Product or Component Type** | Potentiometer |
| **Device short name** | XB4 |
| **Head type** | Standard |
| **Device presentation** | Complete product |

## Complementary

| | |
|---|---|
| **Bezel material** | Chromium plated metal |
| **Mounting diameter** | 0.9 in (22.5 mm) |
| **Product Compatibility** | Ø 6 mm shaft |
| **Sale per indivisible quantity** | 1 |
| **CAD overall width** | 1.2 in (30 mm) |
| **CAD overall height** | 1.9 in (47 mm) |
| **CAD overall depth** | 3.2 in (82 mm) |
| **Net Weight** | 0.209 lb(US) (0.095 kg) |
| **Protective treatment** | TH |
| **Ambient Air Temperature for Storage** | -40…158 °F (-40…70 °C) |
| **Ambient Air Temperature for Operation** | -40…158 °F (-40…70 °C) |
| **Electrical shock protection class** | Class II conforming to IEC 60536 |
| **IP degree of protection** | IP66 IEC 60529<br>IP69 IEC 60529<br>IP69K IEC 60529 |
| **Resistance to high pressure washer** | 1015.3 psi (7000000 Pa) 131 °F (55 °C) 0.1 m |
| **IK degree of protection** | IK06 conforming to IEC 50102 |
| **Standards** | CSA C22.2 No 14<br>IEC 60947-1<br>UL 508 |
| **Product Certifications** | CSA<br>UL Listed<br>BV |
| **Shape of signaling unit head** | Round |
| **Operator profile** | knurled knob, with white) |
| **[Us] rated supply voltage** | <= 30 V AC<br><= 42 V DC |
| **Rated power in W** | 1 W 158 °F (70 °C) |

Price is “List Price” and may be subject to a trade discount – check with your local distributor or retailer for actual price.

Disclaimer: This documentation is not intended as a substitute for and is not to be used for determining suitability or reliability of these products for specific user applications

| | |
|---|---|
| **Precision of internal conversion resistor** | +-10% |
| **Potentiometer characteristic** | Linear |
| **Mechanical durability** | 50000 cycles |
| **Ohmic value** | 4700 Ohm |
| **Material** | Cermet |
| **Vibration resistance** | 5 gn (f= 2…500 Hz) conforming to IEC 60068-2-6 |
| **Shock resistance** | 30 gn 18 ms) half sine wave acceleration IEC 60068-2-27<br>50 gn 11 ms) half sine wave acceleration IEC 60068-2-27 |
| **Main group** | Potentiometer |
| **Group of product** | Potentiometer knurled knob |
| **Colour of marking** | White |

## Environment

| | |
|---|---|
| **Enclosure Type** | UL type 4X/13 |

## Ordering and shipping details

| | |
|---|---|
| **Category** | US10CS222468 |
| **Discount Schedule** | 0CS2 |
| **GTIN** | 3606480985003 |
| **Returnability** | Yes |
| **Country of origin** | FR |

## Packing Units

| | |
|---|---|
| **Unit Type of Package 1** | PCE |
| **Nbr. of units in pkg.** | 1 |
| **Package 1 Height** | 2.09 in (5.3 cm) |
| **Package 1 Width** | 1.7 in (4.4 cm) |
| **Package 1 Length** | 3.4 in (8.7 cm) |
| **Package weight(Lbs)** | 3.7 oz (104 g) |
| **Unit Type of Package 2** | S02 |
| **Number of Units in Package 2** | 40 |
| **Package 2 Height** | 5.9 in (15 cm) |
| **Package 2 Width** | 11.8 in (30 cm) |
| **Package 2 Length** | 15.7 in (40 cm) |
| **Package 2 Weight** | 9.872 lb(US) (4.478 kg) |
| **Unit Type of Package 3** | P06 |
| **Number of Units in Package 3** | 320 |
| **Package 3 Height** | 17.7 in (45 cm) |
| **Package 3 Width** | 31.5 in (80 cm) |
| **Package 3 Length** | 23.6 in (60 cm) |
| **Package 3 Weight** | 98.847 lb(US) (44.836 kg) |

## Contractual warranty

| | |
|---|---|
| **Warranty (in months)** | 18 |

## Environmental Data

Schneider Electric aims to achieve Net Zero status by 2050 through supply chain partnerships, lower impact materials, and circularity via our ongoing “Use Better, Use Longer, Use Again” campaign to extend product lifetimes and recyclability.

Environmental Data explained >

How we assess product sustainability >

### Environmental footprint

| | |
|---|---|
| Total lifecycle Carbon footprint | **2 kg CO2 eq.** |
| Carbon footprint of the manufacturing phase [A1 to A3] | **1 kg CO2 eq.** |
| Carbon footprint of the distribution phase [A4] | **0 kg CO2 eq.** |
| Carbon footprint of the installation phase [A5] | **0 kg CO2 eq.** |
| Carbon footprint of the use phase [B2, B3, B4, B6] | **0.5 kg CO2 eq.** |
| Carbon footprint of the end-of-life phase [C1 to C4] | **0.2 kg CO2 eq.** |
| Environmental Disclosure | Product Environmental Profile |

## Use Better

### Materials and Substances

| | |
|---|---|
| Average percentage of recycled plastic content | **49 %** |
| Average percentage of recycled metal content | **19 %** |
| Packaging made with recycled cardboard | **Yes** |
| Packaging without single use plastic | **No** |
| SCIP Number | **13916f2d-387f-438e-8539-c58c2239cc27** |
| EU RoHS Directive | Compliant By Exemption |
| REACh Regulation | Reference contains Substances of Very High Concern above the threshold |
| California proposition 65 | **WARNING: This product can expose you to chemicals including: Nickel compounds, which is known to the State of California to cause cancer, and Di-isodecyl phthalate (DIDP), which is known to the State of California to cause birth defects or other reproductive harm. For more information go to www.P65Warnings.ca.gov** |

## Use Longer

### Lifetime extension

| | |
|---|---|
| Product repairability index | **A** |

## Use Again

### Repack and remanufacture

| | |
|---|---|
| Recyclability potential, in % | **86** |
| Circularity Profile | End of Life Information |
| Take-back | **No** |

| | |
|---|---|
| WEEE Label | The product must be disposed on European Union markets following specific waste collection and never end up in rubbish bins. |

Dimensions Drawings

## Dimensions

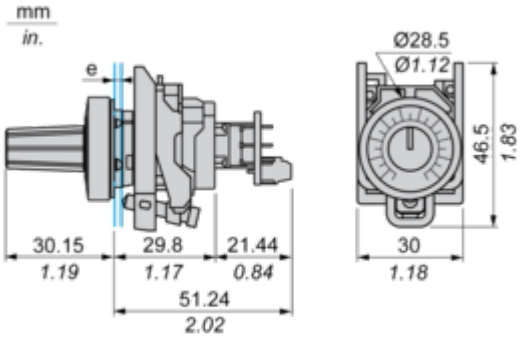


**e:** Panel thickness: 1 mm to 6 mm / 0.03 in. to 0.24 in

## Mounting and Clearance

### Panel Cut-out for Pushbuttons, Switches and Pilot Lights (Finished Holes, Ready for Installation)

#### Connection by Screw Terminals or Plug-in Connectors

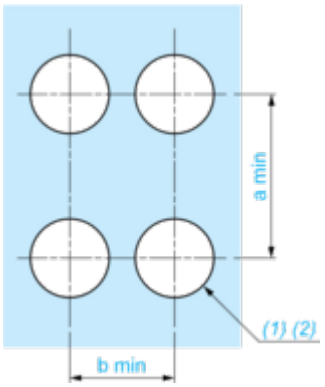


#### Connection by Faston Connectors

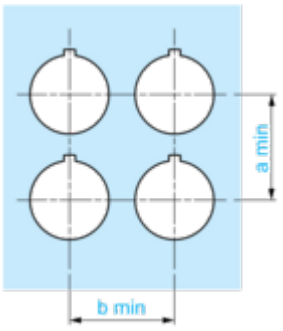


| Connections | a in mm | a in in. | b in mm | b in in. |
|---|---|---|---|---|
| By screw clamp terminals or plug-in connector | 40 | 1.57 | 30 | 1.18 |
| By Faston connectors | 45 | 1.77 | 32 | 1.26 |

#### Detail of Lug Recess

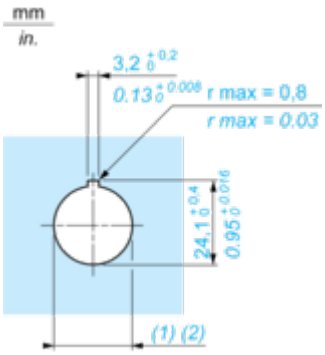


**(1)** Diameter on finished panel or support

**(2)** Ø22.5 mm recommended (Ø22.3 $^{+0.4}_{0}$) / Ø0.89 in. recommended (Ø0.88 in. $^{+0.016}_{0}$)

Image of product / Alternate images

**Alternative**

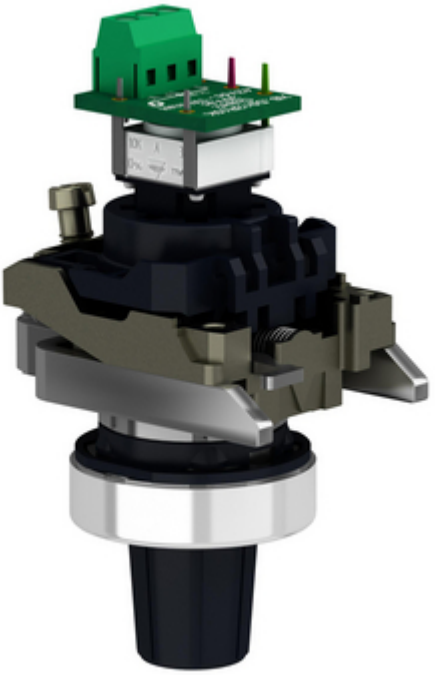



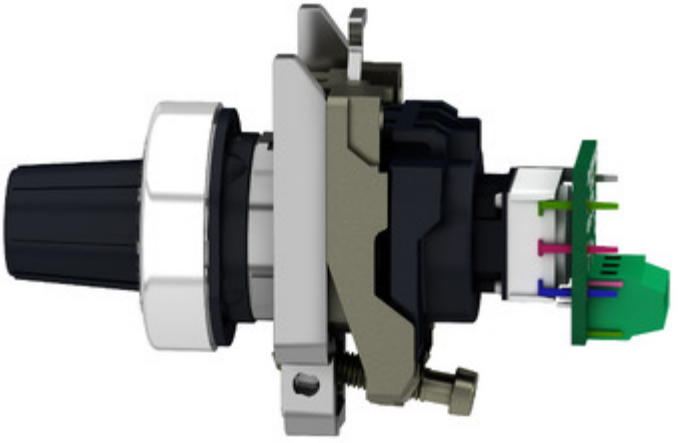


1
2
3
4
5
6
7
8
9
10

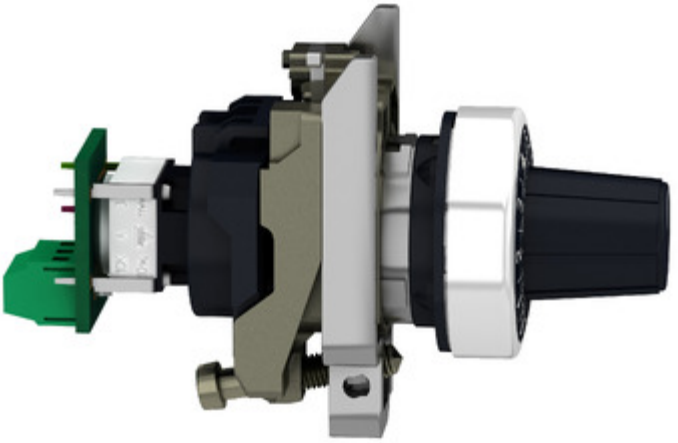


XB..D912R10K
Class2
30Vac
42Vdc - 1W max
CW
A
B
C
1
2
5
6