Product data sheet

Specifications



Illuminated selector switch, Harmony XB4, metal, green handle, 22mm, universal LED, 2 positions, 1NO + 1NC, 24V AC DC

XB4BK123B5

Product availability: Stock - Normally stocked in distribution facility
Important message: A change in appearance may be noted on the product but does not affect its use in terms of function and safety. This makes it compatible with our Universal LED blocks

Main

Range of Product	Harmony XB4
Product or Component Type	Illuminated selector switch
Device short name	XB4
Bezel material	Chromium plated metal
Fixing collar material	Zamak
Head type	Standard
Mounting diameter	0.9 in (22.5 mm)
Sale per indivisible quantity	1
Shape of signaling unit head	Round
Type of operator	stay put
Operator profile	Green standard handle
Operator position information	2 positions 90°
Contacts type and composition	1 NO + 1 NC
Contact operation	Slow-break
Connections - terminals	Screw clamp terminals, <= 2 x 1.5 mm² with cable end IEC 60947-1 Screw clamp terminals, >= 1 x 0.22 mm² without cable end IEC 60947-1
Light source	Universal LED
Bulb base	Integral LED
[Us] rated supply voltage	24 V AC/DC 50/60 Hz

Complementary

Height	1.9 in (47 mm)
Width	1.2 in (30 mm)
Depth	2.7 in (68 mm)
Terminals description ISO n°1	(13-14)NO (21-22)NC
Net Weight	0.245 lb(US) (0.111 kg)
Resistance to high pressure washer	1015.3 psi (7000000 Pa) 131 °F (55 °C) 0.1 m
Contacts usage	Standard contacts

Price is “List Price” and may be subject to a trade discount – check with your local distributor or retailer for actual price.

Disclaimer: This documentation is not intended as a substitute for and is not to be used for determining suitability or reliability of these products for specific user applications

Positive opening	With IEC 60947-5-1 appendix K
Operating torque	1.24 lbf.in (0.14 N.m) NO changing electrical state
Mechanical durability	1000000 cycles
Tightening torque	7.08…10.6 lbf.in (0.8…1.2 N.m) IEC 60947-1
Shape of screw head	Cross Philips no 1 Cross pozidriv No 1 Slotted flat Ø 4 mm Slotted flat Ø 5.5 mm
Contacts material	Silver alloy (Ag/Ni)
Short-circuit protection	10 A cartridge fuse gG IEC 60947-5-1
[Ith] conventional free air thermal current	10 A IEC 60947-5-1
[Ui] rated insulation voltage	600 V 3)IEC 60947-1
[Uimp] rated impulse withstand voltage	6 kV IEC 60947-1
[Ie] rated operational current	3 A 240 V, AC-15, A600 IEC 60947-5-1 6 A 120 V, AC-15, A600 IEC 60947-5-1 0.1 A 600 V, DC-13, Q600 IEC 60947-5-1 0.27 A 250 V, DC-13, Q600 IEC 60947-5-1 0.55 A 125 V, DC-13, Q600 IEC 60947-5-1 1.2 A 600 V, AC-15, A600 IEC 60947-5-1
Electrical durability	1000000 cycles, AC-15, 2 A 230 V 3600 cyc/h 0.5 EN 60947-5-1 appendix C 1000000 cycles, AC-15, 3 A 120 V 3600 cyc/h 0.5 EN 60947-5-1 appendix C 1000000 cycles, AC-15, 4 A 24 V 3600 cyc/h 0.5 EN 60947-5-1 appendix C 1000000 cycles, DC-13, 0.2 A 110 V 3600 cyc/h 0.5 EN 60947-5-1 appendix C 1000000 cycles, DC-13, 0.5 A 24 V 3600 cyc/h 0.5 EN 60947-5-1 appendix C
Electrical reliability	Λ < 10exp(-6) 5 V 1 mA in clean environment IEC 60947-5-4 Λ < 10exp(-8) 17 V 5 mA in clean environment IEC 60947-5-4
Signalling type	Steady
Supply voltage limits	19.2…30 V DC 21.6…26.4 V AC
Current Consumption	18 mA
Service life	100000 h at rated voltage and 25 °C
Surge withstand	1 kV IEC 61000-4-5
Device presentation	Complete product

Environment

Protective treatment	TH
Ambient Air Temperature for Storage	-40…158 °F (-40…70 °C)
Ambient Air Temperature for Operation	-40…158 °F (-40…70 °C)
Electrical shock protection class	Class I conforming to IEC 60536
IP degree of protection	IP66 IEC 60529 IP67 IP69 IP69K
Enclosure Type	UL type 4X/13
IK degree of protection	IK04 conforming to IEC 50102

Standards	IEC 60947-5-4 IEC 60947-1 UL 508 IEC 60947-5-1 CSA C22.2 No 14 IEC 60947-5-5 JIS C8201-5-1 JIS C8201-1
Product Certifications	DNV LROS (Lloyds register of shipping) BV CSA UL
Vibration resistance	5 gn (f= 2…500 Hz) conforming to IEC 60068-2-6
Shock resistance	30 gn 18 ms) half sine wave acceleration IEC 60068-2-27 50 gn 11 ms) half sine wave acceleration IEC 60068-2-27
Resistance to fast transients	2 kV IEC 61000-4-4
Resistance to electromagnetic fields	9.1 V/m (10 V/m) IEC 61000-4-3
Resistance to electrostatic discharge	6 kV on contact (on metal parts) IEC 61000-4-2 8 kV in free air (in insulating parts) IEC 61000-4-2
Electromagnetic emission	Class B IEC 55011

Ordering and shipping details

Category	US10CS222468
Discount Schedule	0CS2
GTIN	3389110892192
Returnability	Yes
Country of origin	FR

Packing Units

Unit Type of Package 1	PCE
Nbr. of units in pkg.	1
Package 1 Height	3.425 in (8.700 cm)
Package 1 Width	2.047 in (5.200 cm)
Package 1 Length	1.299 in (3.300 cm)
Package weight(Lbs)	3.845 oz (109.000 g)
Unit Type of Package 2	S03
Number of Units in Package 2	100
Package 2 Height	11.811 in (30.000 cm)
Package 2 Width	11.811 in (30.000 cm)
Package 2 Length	15.748 in (40.000 cm)
Package 2 Weight	25.325 lb(US) (11.487 kg)
Unit Type of Package 3	P06
Number of Units in Package 3	800
Package 3 Height	29.528 in (75.000 cm)
Package 3 Width	23.622 in (60.000 cm)
Package 3 Length	31.496 in (80.000 cm)

Package 3 Weight	227.085 lb(US) (103.004 kg)

Contractual warranty

Warranty (in months)	18

Environmental Data

Schneider Electric aims to achieve Net Zero status by 2050 through supply chain partnerships, lower impact materials, and circularity via our ongoing “Use Better, Use Longer, Use Again” campaign to extend product lifetimes and recyclability.

Environmental Data explained >

How we assess product sustainability >

Environmental footprint

Total lifecycle Carbon footprint	**13 kg CO2 eq.**
Carbon footprint of the manufacturing phase [A1 to A3]	**0.8 kg CO2 eq.**
Carbon footprint of the distribution phase [A4]	**0 kg CO2 eq.**
Carbon footprint of the installation phase [A5]	**0 kg CO2 eq.**
Carbon footprint of the use phase [B2, B3, B4, B6]	**12 kg CO2 eq.**
Carbon footprint of the end-of-life phase [C1 to C4]	**0.3 kg CO2 eq.**
Environmental Disclosure	Product Environmental Profile

Use Better

Materials and Substances

Packaging made with recycled cardboard	**No**
Packaging without single use plastic	**No**
SCIP Number	**51477834-6557-463b-9186-97e1bf9e303d**
EU RoHS Directive	Compliant By Exemption
REACh Regulation	Reference contains Substances of Very High Concern above the threshold
California proposition 65	**WARNING: This product can expose you to chemicals including: Lead and lead compounds, which is known to the State of California to cause cancer and birth defects or other reproductive harm. For more information go to www.P65Warnings.ca.gov**

Use Longer

Lifetime extension

Product repairability index	**A**

Use Again

Repack and remanufacture

Recyclability potential, in %	**75**
Circularity Profile	End of Life Information
Take-back	**No**
WEEE Label	**The product must be disposed on European Union markets following specific waste collection and never end up in rubbish bins.**

Dimensions Drawings

Dimensions

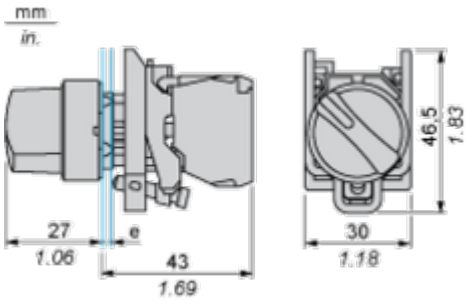

e : clamping thickness: 1 to 6 mm / 0.04 to 0.24 in.

Mounting and Clearance

Panel Cut-out for Pushbuttons, Switches and Pilot Lights (Finished Holes, Ready for Installation)

Connection by Screw Clamp Terminals or Plug-in Connectors or on Printed Circuit Board	Connection by Faston Connectors
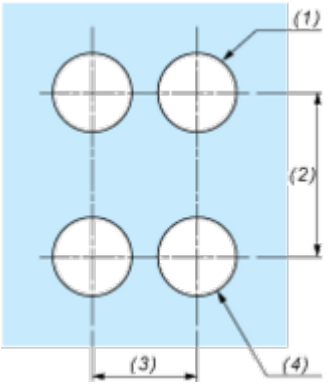	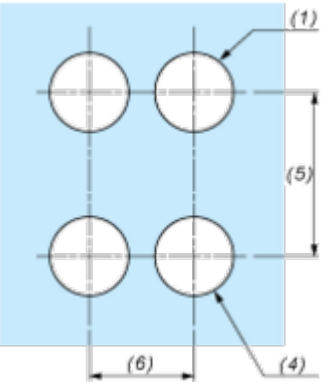
(1) Diameter on finished panel or support **(2)** 40 mm min. / 1.57 in. min. **(3)** 30 mm min. / 1.18 in. min. **(4)** Ø 22.5 mm / 0.89 in. recommended (Ø 22.3 mm $_{0}^{+0.4}$ / 0.88 in. $_{0}^{+0.016}$) **(5)** 45 mm min. / 1.78 in. min. **(6)** 32 mm min. / 1.26 in. min.	

Image of product / Alternate images

Alternative

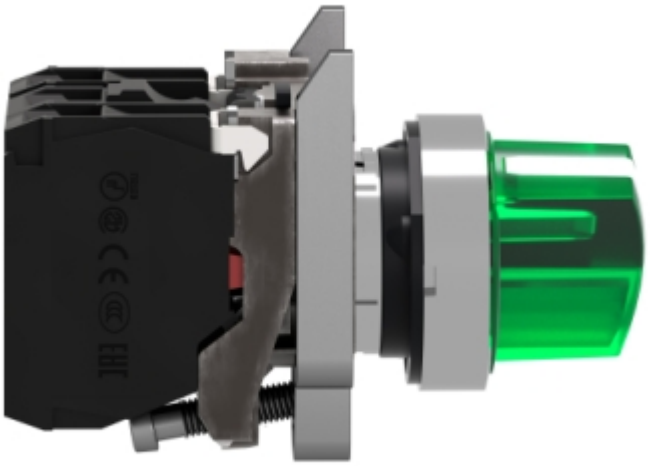





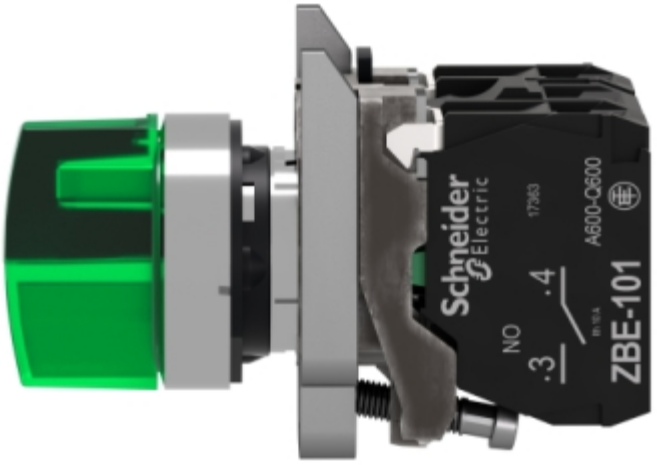
Schneider Electric
17263
A600-Q600
NO
.3
.4
ZBE-101




NO 3
4
X1
U N
X2
NC 1
2