Product data sheet

Specifications



Push button, Harmony XB4, metal, projecting, yellow, 22mm, spring return, booted, unmarked, 1NO

XB4BP51

Product availability: Stock - Normally stocked in distribution facility

Main

Range of Product	Harmony XB4
Device short name	XB4
Product or Component Type	Push-button
Product Compatibility	Not compatible with legend holder
Bezel material	Chromium plated metal
Fixing collar material	Zamak
Mounting diameter	0.9 in (22.5 mm)
Sale per indivisible quantity	1
Shape of signaling unit head	Round
Type of operator	spring return
Operator profile	Yellow projecting, unmarked
Head type	Standard
Operator additional information	Clear boot
Contacts type and composition	1 NO
Contact operation	Slow-break
Connections - terminals	Screw clamp terminals, <= 2 x 1.5 mm² with cable end IEC 60947-1 Screw clamp terminals, 1 x 0.22...2 x 2.5 mm² without cable end IEC 60947-1

Complementary

Height	1.9 in (47 mm)
Width	1.2 in (30 mm)
Depth	2.4 in (61 mm)
Terminals description ISO n°1	(13-14)NO
Net Weight	0.181 lb(US) (0.082 kg)
Resistance to high pressure washer	1015.3 psi (7000000 Pa) 131 °F (55 °C) 0.1 m
Contacts usage	Standard contacts
Positive opening	Without
Operating travel	0.1 in (2.6 mm) NO changing electrical state) 0.2 in (4.3 mm) total travel)
Operating force	3.8 N NO changing electrical state
Mechanical durability	10000000 cycles
Tightening torque	7.08…10.6 lbf.in (0.8…1.2 N.m) IEC 60947-1

Price is “List Price” and may be subject to a trade discount – check with your local distributor or retailer for actual price.

Disclaimer: This documentation is not intended as a substitute for and is not to be used for determining suitability or reliability of these products for specific user applications

Shape of screw head	Cross Philips no 1 Cross pozidriv No 1 Slotted flat Ø 4 mm Slotted flat Ø 5.5 mm
Contacts material	Silver alloy (Ag/Ni)
Short-circuit protection	10 A cartridge fuse gG IEC 60947-5-1
[Ith] conventional free air thermal current	10 A IEC 60947-5-1
[Ui] rated insulation voltage	600 V 3)IEC 60947-1
[Uimp] rated impulse withstand voltage	6 kV IEC 60947-1
[Ie] rated operational current	3 A 240 V, AC-15, A600 IEC 60947-5-1 6 A 120 V, AC-15, A600 IEC 60947-5-1 0.1 A 600 V, DC-13, Q600 IEC 60947-5-1 0.27 A 250 V, DC-13, Q600 IEC 60947-5-1 0.55 A 125 V, DC-13, Q600 IEC 60947-5-1 1.2 A 600 V, AC-15, A600 IEC 60947-5-1
Electrical durability	1000000 cycles, AC-15, 2 A 230 V 3600 cyc/h 0.5 IEC 60947-5-1 appendix C 1000000 cycles, AC-15, 3 A 120 V 3600 cyc/h 0.5 IEC 60947-5-1 appendix C 1000000 cycles, AC-15, 4 A 24 V 3600 cyc/h 0.5 IEC 60947-5-1 appendix C 1000000 cycles, DC-13, 0.2 A 110 V 3600 cyc/h 0.5 IEC 60947-5-1 appendix C 1000000 cycles, DC-13, 0.5 A 24 V 3600 cyc/h 0.5 IEC 60947-5-1 appendix C
Electrical reliability	Λ < 10exp(-6) 5 V 1 mA in clean environment IEC 60947-5-4 Λ < 10exp(-8) 17 V 5 mA in clean environment IEC 60947-5-4
Device presentation	Complete product

Environment

Protective treatment	TH
Ambient Air Temperature for Storage	-40…158 °F (-40…70 °C)
Ambient Air Temperature for Operation	-40…158 °F (-40…70 °C)
Overvoltage category	Class I conforming to IEC 60536
IP degree of protection	IP66 IEC 60529 IP67
Enclosure Type	UL type 4X/13
IK degree of protection	IK06 conforming to IEC 50102
Standards	CSA C22.2 No 14 IEC 60947-1 UL 508 IEC 60947-5-5 IEC 60947-5-4 JIS C8201-5-1 IEC 60947-5-1 JIS C8201-1
Product Certifications	CSA LROS (Lloyds register of shipping) BV UL Listed DNV
Vibration resistance	5 gn (f= 2…500 Hz) conforming to IEC 60068-2-6
Shock resistance	30 gn 18 ms) half sine wave acceleration IEC 60068-2-27 50 gn 11 ms) half sine wave acceleration IEC 60068-2-27

Ordering and shipping details

Category	US10CS222468
Discount Schedule	0CS2

GTIN	3389110118889
Returnability	Yes
Country of origin	FR

Packing Units

Unit Type of Package 1	PCE
Nbr. of units in pkg.	1
Package 1 Height	3.465 in (8.800 cm)
Package 1 Width	1.339 in (3.400 cm)
Package 1 Length	2.126 in (5.400 cm)
Package weight(Lbs)	2.892 oz (82.000 g)
Unit Type of Package 2	BB1
Number of Units in Package 2	5
Package 2 Height	3.465 in (8.800 cm)
Package 2 Width	1.339 in (3.400 cm)
Package 2 Length	10.433 in (26.500 cm)
Package 2 Weight	14.638 oz (415.000 g)
Unit Type of Package 3	S03
Number of Units in Package 3	150
Package 3 Height	11.8 in (30 cm)
Package 3 Width	11.8 in (30 cm)
Package 3 Length	15.7 in (40 cm)
Package 3 Weight	28.709 lb(US) (13.022 kg)

Contractual warranty

Warranty (in months)	18

Environmental Data

Schneider Electric aims to achieve Net Zero status by 2050 through supply chain partnerships, lower impact materials, and circularity via our ongoing “Use Better, Use Longer, Use Again” campaign to extend product lifetimes and recyclability.

Environmental Data explained >

How we assess product sustainability >

Environmental footprint

Total lifecycle Carbon footprint	**0.7 kg CO2 eq.**
Carbon footprint of the manufacturing phase [A1 to A3]	**0.6 kg CO2 eq.**
Carbon footprint of the distribution phase [A4]	**0 kg CO2 eq.**
Carbon footprint of the installation phase [A5]	**0 kg CO2 eq.**
Carbon footprint of the use phase [B2, B3, B4, B6]	**0 kg CO2 eq.**
Carbon footprint of the end-of-life phase [C1 to C4]	**0.1 kg CO2 eq.**
Environmental Disclosure	Product Environmental Profile

Use Better

Materials and Substances

Average percentage of recycled plastic content	**19 %**
Average percentage of recycled metal content	**18 %**
Packaging made with recycled cardboard	**Yes**
Packaging without single use plastic	**Yes**
EU RoHS Directive	Compliant
REACh Regulation	Reference contains Substances of Very High Concern above the threshold
California proposition 65	**WARNING: This product can expose you to chemicals including: Lead and lead compounds, which is known to the State of California to cause cancer and birth defects or other reproductive harm. For more information go to www.P65Warnings.ca.gov**

Use Longer

Lifetime extension

Product repairability index	**A**

Use Again

Repack and remanufacture

Recyclability potential, in %	**84**
Circularity Profile	End of Life Information
Take-back	**No**
WEEE Label	**The product must be disposed on European Union markets following specific waste collection and never end up in rubbish bins.**

Dimensions Drawings

Dimensions

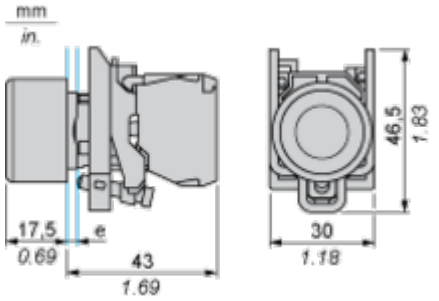

e : clamping thickness: 1 to 6 mm / 0.04 to 0.24 in.

Mounting and Clearance

Panel Cut-out for Pushbuttons, Switches and Pilot Lights (Finished Holes, Ready for Installation)

Connection by Screw Clamp Terminals or Plug-in Connectors or on Printed Circuit Board	Connection by Faston Connectors
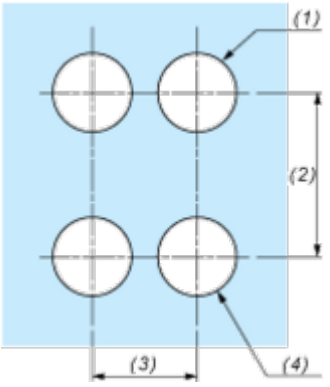	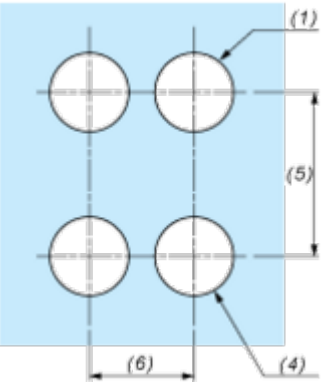
(1) Diameter on finished panel or support **(2)** 40 mm min. / 1.57 in. min. **(3)** 30 mm min. / 1.18 in. min. **(4)** Ø 22.5 mm / 0.89 in. recommended (Ø 22.3 mm $_{0}^{+0.4}$ / 0.88 in. $_{0}^{+0.016}$) **(5)** 45 mm min. / 1.78 in. min. **(6)** 32 mm min. / 1.26 in. min.	

Image of product / Alternate images

Alternative



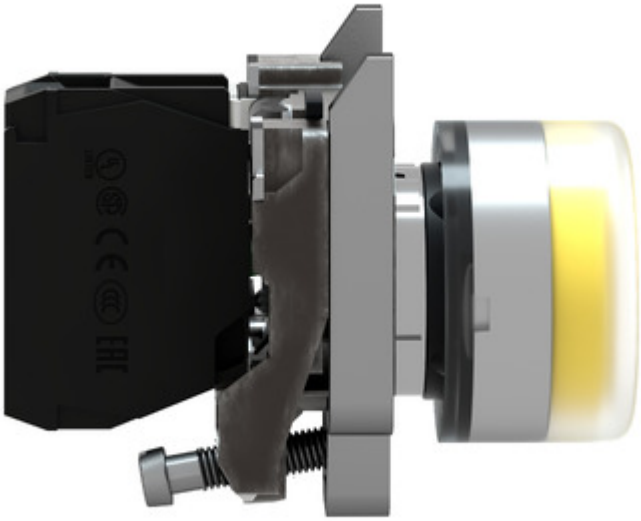



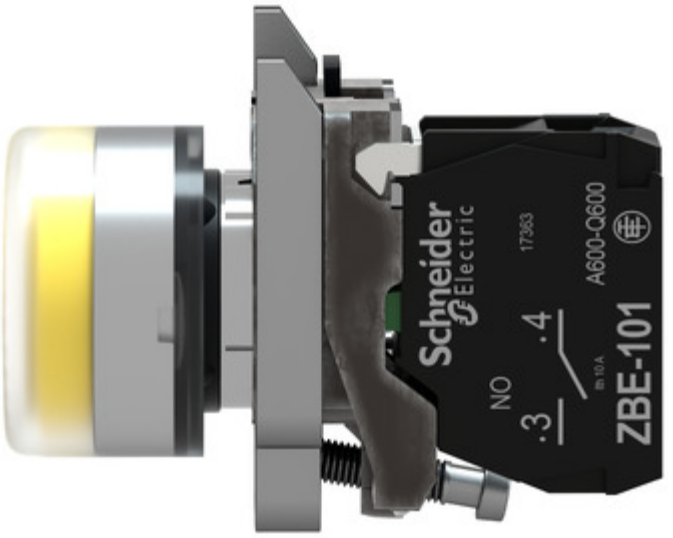
Schneider Electric
17363
A600-Q600
NO
.3
.4
ZBE-101




NO 3
4
2 5
3 6