Product data sheet

Specifications

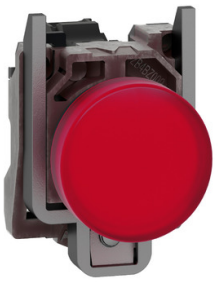

Pilot light, Harmony XB4,metal, red, 22mm, universal LED, plain lens, 110…120V AC

XB4BVG4

Product availability: Stock - Normally stocked in distribution facility
Important message: A change in appearance may be noted on the product but does not affect its use in terms of function and safety. This makes it compatible with our Universal LED blocks

Main

Range of Product	Harmony XB4
Product or Component Type	Pilot light
Device short name	XB4
Bezel material	Chromium plated metal
Fixing collar material	Zamak
Mounting diameter	0.9 in (22.5 mm)
Head type	Standard
Sale per indivisible quantity	1
Shape of signaling unit head	Round
Cap/operator or lens colour	Red
Operator additional information	With plain lens
Light source	Universal LED
Bulb base	Integral LED
Light source colour	Red
[Us] rated supply voltage	110...120 V AC 50/60 Hz

Complementary

Height	1.9 in (47 mm)
Width	1.2 in (30 mm)
Depth	2.1 in (54 mm)
Terminals description ISO n°1	(X1-X2)PL
Net Weight	0.18 lb(US) (0.08 kg)
Resistance to high pressure washer	1015.3 psi (7000000 Pa) 131 °F (55 °C) 0.1 m
Connections - terminals	Screw clamp terminals, <= 2 x 1.5 mm² with cable end IEC 60947-1 Screw clamp terminals, 1 x 0.22...2 x 2.5 mm² without cable end IEC 60947-1
[Ui] rated insulation voltage	250 V 3)IEC 60947-1
[Uimp] rated impulse withstand voltage	4 kV IEC 60947-1
Signalling type	Steady
Current Consumption	14 mA
Service life	100000 h at rated voltage and 25 °C

Price is “List Price” and may be subject to a trade discount – check with your local distributor or retailer for actual price.

Disclaimer: This documentation is not intended as a substitute for and is not to be used for determining suitability or reliability of these products for specific user applications

Surge withstand	1 kV IEC 61000-4-5
Device presentation	Complete product
Supply voltage limits	100…132 V AC

Environment

Protective treatment	TH
Ambient Air Temperature for Storage	-40…158 °F (-40…70 °C)
Ambient Air Temperature for Operation	-40…158 °F (-40…70 °C)
Electrical shock protection class	Class I conforming to IEC 60536
IP degree of protection	IP66 IEC 60529 IP67 IP69 IP69K
Enclosure Type	UL type 4X/13
IK degree of protection	IK06 conforming to IEC 50102
Standards	IEC 60947-5-5 JIS C8201-5-1 IEC 60947-5-1 CSA C22.2 No 14 IEC 60947-5-4 UL 508 IEC 60947-1 JIS C8201-1
Product Certifications	UL Listed CSA
Vibration resistance	5 gn (f= 12…500 Hz) conforming to IEC 60068-2-6
Shock resistance	30 gn 18 ms) half sine wave acceleration IEC 60068-2-27 50 gn 11 ms) half sine wave acceleration IEC 60068-2-27
Resistance to fast transients	2 kV IEC 61000-4-4
Resistance to electromagnetic fields	9.1 V/m (10 V/m) IEC 61000-4-3
Resistance to electrostatic discharge	6 kV on contact (on metal parts) IEC 61000-4-2 8 kV in free air (in insulating parts) IEC 61000-4-2
Electromagnetic emission	Class B IEC 55011

Ordering and shipping details

Category	US10CS222468
Discount Schedule	0CS2
GTIN	3389110891973
Returnability	Yes
Country of origin	FR

Packing Units

Unit Type of Package 1	PCE
Nbr. of units in pkg.	1
Package 1 Height	3.465 in (8.800 cm)
Package 1 Width	1.339 in (3.400 cm)
Package 1 Length	2.126 in (5.400 cm)

Package weight(Lbs)	2.787 oz (79.000 g)
Unit Type of Package 2	BB1
Number of Units in Package 2	5
Package 2 Height	3.465 in (8.800 cm)
Package 2 Width	1.339 in (3.400 cm)
Package 2 Length	10.433 in (26.500 cm)
Package 2 Weight	13.933 oz (395.000 g)
Unit Type of Package 3	S03
Number of Units in Package 3	150
Package 3 Height	11.811 in (30.000 cm)
Package 3 Width	11.811 in (30.000 cm)
Package 3 Length	15.748 in (40.000 cm)
Package 3 Weight	26.954 lb(US) (12.226 kg)

Contractual warranty

Warranty (in months)	18

Environmental Data

Schneider Electric aims to achieve Net Zero status by 2050 through supply chain partnerships, lower impact materials, and circularity via our ongoing “Use Better, Use Longer, Use Again” campaign to extend product lifetimes and recyclability.

Environmental Data explained >

How we assess product sustainability >

Environmental footprint

Total lifecycle Carbon footprint	**2 kg CO2 eq.**
Carbon footprint of the manufacturing phase [A1 to A3]	**0.6 kg CO2 eq.**
Carbon footprint of the distribution phase [A4]	**0 kg CO2 eq.**
Carbon footprint of the installation phase [A5]	**0 kg CO2 eq.**
Carbon footprint of the use phase [B2, B3, B4, B6]	**0.7 kg CO2 eq.**
Carbon footprint of the end-of-life phase [C1 to C4]	**0.2 kg CO2 eq.**
Environmental Disclosure	Product Environmental Profile

Use Better

Materials and Substances

Average percentage of recycled plastic content	**36 %**
Average percentage of recycled metal content	**17 %**
Packaging made with recycled cardboard	**Yes**
Packaging without single use plastic	**Yes**
SCIP Number	**3d14fd98-3859-4733-a5ee-a3016769973c**
EU RoHS Directive	Compliant By Exemption
REACh Regulation	Reference contains Substances of Very High Concern above the threshold
California proposition 65	**WARNING: This product can expose you to chemicals including: Lead and lead compounds, which is known to the State of California to cause cancer and birth defects or other reproductive harm. For more information go to www.P65Warnings.ca.gov**

Use Longer

Lifetime extension

Product repairability index	**A**

Use Again

Repack and remanufacture

Recyclability potential, in %	**85**
Circularity Profile	End of Life Information
Take-back	**No**

WEEE Label	The product must be disposed on European Union markets following specific waste collection and never end up in rubbish bins.

Dimensions Drawings

Dimensions

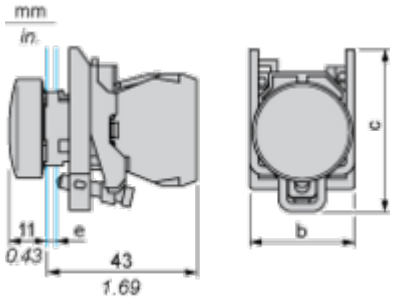

e : clamping thickness: 1 to 6 mm / 0.04 to 0.24 in.
b : 30 mm / 1.18 in.
c : 46.5 mm / 1.83 in.

Mounting and Clearance

Panel Cut-out for Pushbuttons, Switches and Pilot Lights (Finished Holes, Ready for Installation)

Connection by Screw Clamp Terminals or Plug-in Connectors or on Printed Circuit Board	Connection by Faston Connectors
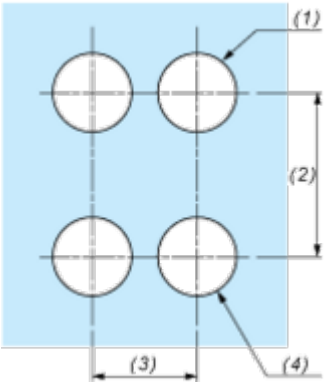	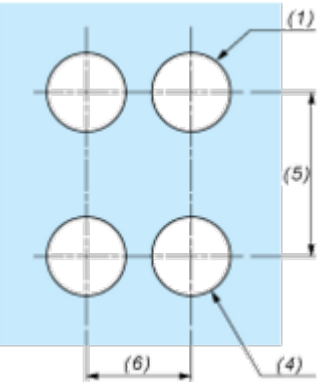

(1) Diameter on finished panel or support
(2) 40 mm min. / 1.57 in. min.
(3) 30 mm min. / 1.18 in. min.
(4) Ø 22.5 mm / 0.89 in. recommended (Ø 22.3 mm $_{0}^{+0.4}$ / 0.88 in. $_{0}^{+0.016}$)
(5) 45 mm min. / 1.78 in. min.
(6) 32 mm min. / 1.26 in. min.

Image of product / Alternate images

Alternative






ZBV-XX




Schneider Electric
ZBV-XX
X1
XX V
DEL
XX mA
X2



