# Product data sheet

Specifications



## Illuminated double headed push button, Harmony XB4, metal, 22mm, 1 green flush I + 1 pilot light + 1 red projecting O, 1 NO + 1 NC

XB4BW73731B5

**Product availability: Stock - Normally stocked in distribution facility**
**Important message: A change in appearance may be noted on the product but does not affect its use in terms of function and safety. This makes it compatible with our Universal LED blocks**

## Main

| | |
|---|---|
| **Range of Product** | Harmony XB4 |
| **Product or Component Type** | Illuminated double-headed push-button |
| **Device short name** | XB4 |
| **Bezel material** | Chromium plated metal |
| **Head type** | Standard |
| **Mounting diameter** | 0.9 in (22.5 mm) |
| **Colour of marking** | White marking when green, red or black caps<br>Black marking when white caps |
| **Light source** | Protected LED |
| **Light source colour** | White |
| **Device presentation** | Complete product |

## Complementary

| | |
|---|---|
| **Fixing collar material** | Zamak |
| **Height** | 2.0 in (50 mm) |
| **Width** | 1.2 in (30 mm) |
| **Depth** | 2.3 in (59 mm) |
| **Net Weight** | 0.29 lb(US) (0.13 kg) |
| **Resistance to high pressure washer** | 1015.3 psi (7000000 Pa) 131 °F (55 °C) 0.1 m |
| **Shape of signaling unit head** | Rectangular |
| **Type of operator** | spring return |
| **Operator profile** | 1 flush - 1 projecting push-buttons - 1 central pilot light |
| **Operators description** | Green "I" - red "O" |
| **Operator profile** | Green flush, I white)<br>Red projecting, O white) |
| **Contacts type and composition** | 1 NO + 1 NC |
| **Contact operation** | Slow-break |
| **Contacts usage** | Standard contacts |
| **Positive opening** | With IEC 60947-5-1 appendix K |

Price is “List Price” and may be subject to a trade discount – check with your local distributor or retailer for actual price.

Disclaimer: This documentation is not intended as a substitute for and is not to be used for determining suitability or reliability of these products for specific user applications

| | |
|---|---|
| **Operating travel** | 0.06 in (1.5 mm) NC changing electrical state)<br>0.1 in (2.6 mm) NO changing electrical state)<br>0.2 in (4.3 mm) total travel) |
| **Operating force** | 3.5 N NC changing electrical state<br>3.8 N NO changing electrical state |
| **Mechanical durability** | 1000000 cycles |
| **Connections - terminals** | Screw clamp terminals, <= 2 x 1.5 mm² with cable end IEC 60947-1<br>Screw clamp terminals, >= 1 x 0.22 mm² without cable end IEC 60947-1 |
| **Tightening torque** | 7.08…10.6 lbf.in (0.8…1.2 N.m) IEC 60947-1 |
| **Shape of screw head** | Cross JIS No 1<br>Cross Philips no 1<br>Cross pozidriv No 1<br>Slotted flat Ø 4 mm<br>Slotted flat Ø 5.5 mm |
| **Contacts material** | Silver alloy (Ag/Ni) |
| **Short-circuit protection** | 10 A cartridge fuse gG IEC 60947-5-1 |
| **[Ith] conventional free air thermal current** | 10 A IEC 60947-5-1 |
| **[Ui] rated insulation voltage** | 600 V 3)IEC 60947-1 |
| **[Uimp] rated impulse withstand voltage** | 6 kV IEC 60947-1 |
| **[Ie] rated operational current** | 3 A 240 V, AC-15, A600 IEC 60947-5-1<br>6 A 120 V, AC-15, A600 IEC 60947-5-1<br>0.1 A 600 V, DC-13, Q600 IEC 60947-5-1<br>0.27 A 250 V, DC-13, Q600 IEC 60947-5-1<br>0.55 A 125 V, DC-13, Q600 IEC 60947-5-1<br>1.2 A 600 V, AC-15, A600 IEC 60947-5-1 |
| **Electrical durability** | 1000000 cycles, AC-15, 2 A 230 V 3600 cyc/h 0.5 IEC 60947-5-1 appendix C<br>1000000 cycles, AC-15, 3 A 120 V 3600 cyc/h 0.5 IEC 60947-5-1 appendix C<br>1000000 cycles, AC-15, 4 A 24 V 3600 cyc/h 0.5 IEC 60947-5-1 appendix C<br>1000000 cycles, DC-13, 0.2 A 110 V 3600 cyc/h 0.5 IEC 60947-5-1 appendix C<br>1000000 cycles, DC-13, 0.5 A 24 V 3600 cyc/h 0.5 IEC 60947-5-1 appendix C |
| **Electrical reliability** | Λ < 10exp(-6) 5 V 1 mA in clean environment IEC 60947-5-4<br>Λ < 10exp(-8) 17 V 5 mA in clean environment IEC 60947-5-4 |
| **Signalling type** | Steady |
| **Bulb base** | Integral LED |
| **[Us] rated supply voltage** | 24 V AC/DC 50/60 Hz |
| **Supply voltage limits** | 19.2…30 V DC<br>21.6…26.4 V AC |
| **Current Consumption** | 18 mA |
| **Service life** | 100000 h at rated voltage and 25 °C |
| **Surge withstand** | 1 kV IEC 61000-4-5 |
| **Compatibility code** | XB4 |

# Environment

| | |
|---|---|
| **Protective treatment** | TH |
| **Ambient Air Temperature for Storage** | -40…158 °F (-40…70 °C) |
| **Ambient Air Temperature for Operation** | -40…158 °F (-40…70 °C) |
| **Electrical shock protection class** | Class I conforming to IEC 60536 |
| **IP degree of protection** | IP66 IEC 60529<br>IP69K IEC 60529<br>IP69 IEC 60529 |
| **Enclosure Type** | UL type 4X/13 |

| | |
|---|---|
| **IK degree of protection** | IK06 conforming to IEC 50102 |
| **Standards** | IEC 60947-1<br>IEC 60947-5-1<br>CSA C22.2 No 14<br>JIS C8201-5-1<br>IEC 60947-5-5<br>IEC 60947-5-4<br>UL 508<br>JIS C8201-1 |
| **Product Certifications** | CSA<br>LROS (Lloyds register of shipping)<br>BV<br>UL Listed<br>DNV |
| **Vibration resistance** | 5 gn (f= 2…500 Hz) conforming to IEC 60068-2-6 |
| **Shock resistance** | 30 gn 18 ms) half sine wave acceleration IEC 60068-2-27<br>50 gn 11 ms) half sine wave acceleration IEC 60068-2-27 |
| **Resistance to fast transients** | 2 kV IEC 61000-4-4 |
| **Resistance to electromagnetic fields** | 9.1 V/m (10 V/m) IEC 61000-4-3 |
| **Resistance to electrostatic discharge** | 6 kV on contact (on metal parts) IEC 61000-4-2<br>8 kV in free air (in insulating parts) IEC 61000-4-2 |
| **Electromagnetic emission** | Class B IEC 55011 |

## Ordering and shipping details

| | |
|---|---|
| **Category** | US10CS222468 |
| **Discount Schedule** | 0CS2 |
| **GTIN** | 3389119043601 |
| **Returnability** | Yes |
| **Country of origin** | FR |

## Packing Units

| | |
|---|---|
| **Unit Type of Package 1** | PCE |
| **Nbr. of units in pkg.** | 1 |
| **Package 1 Height** | 1.378 in (3.500 cm) |
| **Package 1 Width** | 2.165 in (5.500 cm) |
| **Package 1 Length** | 3.543 in (9.000 cm) |
| **Package weight(Lbs)** | 4.402 oz (124.800 g) |
| **Unit Type of Package 2** | S03 |
| **Number of Units in Package 2** | 100 |
| **Package 2 Height** | 11.8 in (30 cm) |
| **Package 2 Width** | 11.8 in (30 cm) |
| **Package 2 Length** | 15.7 in (40 cm) |
| **Package 2 Weight** | 28.451 lb(US) (12.905 kg) |
| **Unit Type of Package 3** | P06 |
| **Number of Units in Package 3** | 800 |
| **Package 3 Height** | 29.528 in (75.000 cm) |
| **Package 3 Width** | 31.496 in (80.000 cm) |

| | |
|---|---|
| **Package 3 Length** | 23.622 in (60.000 cm) |
| **Package 3 Weight** | 245.242 lb(US) (111.240 kg) |

## Contractual warranty

| | |
|---|---|
| **Warranty (in months)** | 18 |

## Environmental Data

Schneider Electric aims to achieve Net Zero status by 2050 through supply chain partnerships, lower impact materials, and circularity via our ongoing “Use Better, Use Longer, Use Again” campaign to extend product lifetimes and recyclability.

Environmental Data explained >

How we assess product sustainability >

### Environmental footprint

| | |
|---|---|
| Total lifecycle Carbon footprint | **14 kg CO2 eq.** |
| Carbon footprint of the manufacturing phase [A1 to A3] | **1 kg CO2 eq.** |
| Carbon footprint of the distribution phase [A4] | **0 kg CO2 eq.** |
| Carbon footprint of the installation phase [A5] | **0 kg CO2 eq.** |
| Carbon footprint of the use phase [B2, B3, B4, B6] | **13 kg CO2 eq.** |
| Carbon footprint of the end-of-life phase [C1 to C4] | **0.2 kg CO2 eq.** |
| Environmental Disclosure | Product Environmental Profile |

## Use Better

### Materials and Substances

| | |
|---|---|
| Average percentage of recycled plastic content | **28 %** |
| Average percentage of recycled metal content | **17 %** |
| Packaging made with recycled cardboard | **Yes** |
| Packaging without single use plastic | **Yes** |
| SCIP Number | **2c36ce9a-adfd-4e17-bb1b-b76b7fc6aefe** |
| EU RoHS Directive | Compliant By Exemption |
| REACh Regulation | Reference contains Substances of Very High Concern above the threshold |
| California proposition 65 | **WARNING: This product can expose you to chemicals including: Lead and lead compounds, which is known to the State of California to cause cancer and birth defects or other reproductive harm. For more information go to www.P65Warnings.ca.gov** |

## Use Longer

### Lifetime extension

| | |
|---|---|
| Product repairability index | **A** |

## Use Again

### Repack and remanufacture

| | |
|---|---|
| Recyclability potential, in % | **75** |
| Circularity Profile | End of Life Information |
| Take-back | **No** |

| | |
|---|---|
| WEEE Label | The product must be disposed on European Union markets following specific waste collection and never end up in rubbish bins. |

Dimensions Drawings

**Dimensions**

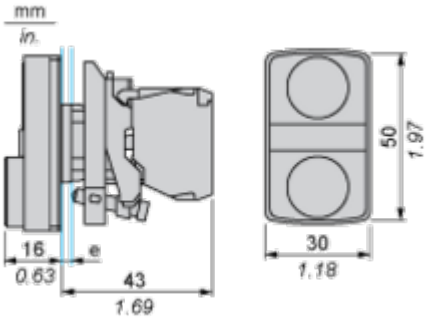

## Mounting and Clearance

### Panel Cut-out for Pushbuttons, Switches and Pilot Lights (Finished Holes, Ready for Installation)

| Connection by Screw Clamp Terminals or Plug-in Connectors or on Printed Circuit Board | Connection by Faston Connectors |
|---|---|
| 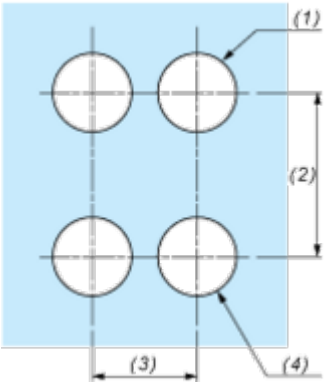 | 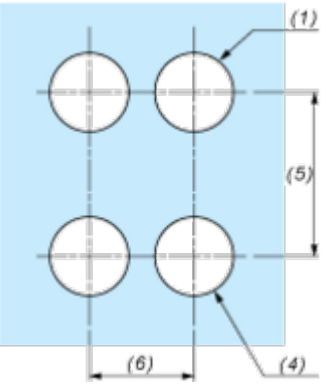 |
| **(1)** Diameter on finished panel or support<br>**(2)** 40 mm min. / 1.57 in. min.<br>**(3)** 30 mm min. / 1.18 in. min.<br>**(4)** Ø 22.5 mm / 0.89 in. recommended (Ø 22.3 mm $_{0}^{+0.4}$ / 0.88 in. $_{0}^{+0.016}$)<br>**(5)** 45 mm min. / 1.78 in. min.<br>**(6)** 32 mm min. / 1.26 in. min. | |

## Pushbuttons, Switches and Pilot Lights for Printed Circuit Board Connection

### Panel Cut-outs (Viewed from Installer's Side)

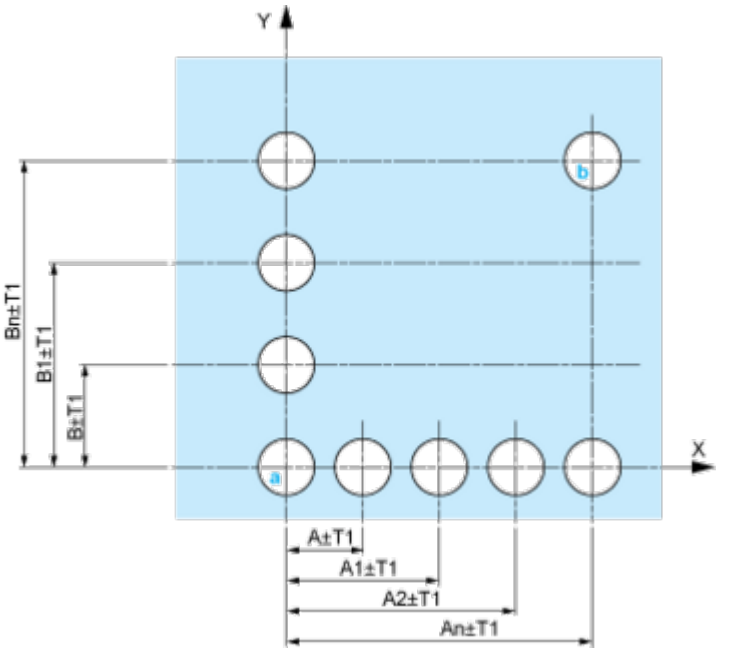


**A:** 30 mm min. / 1.18 in. min.
**B:** 40 mm min. / 1.57 in. min.

### Printed Circuit Board Cut-outs (Viewed from Electrical Block Side)

Dimensions in mm

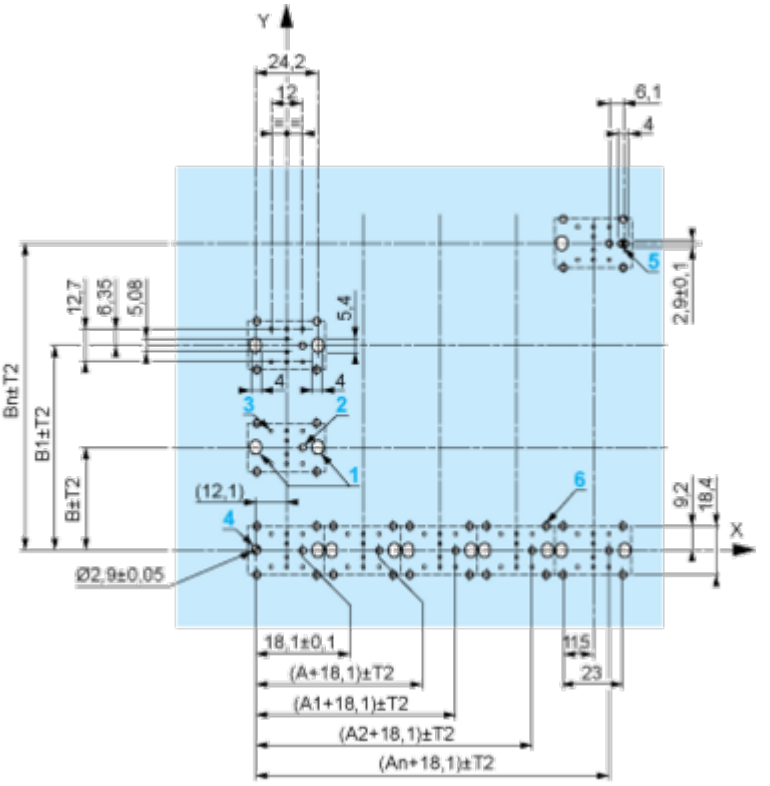


**A:** 30 mm min.
**B:** 40 mm min.
Dimensions in in.

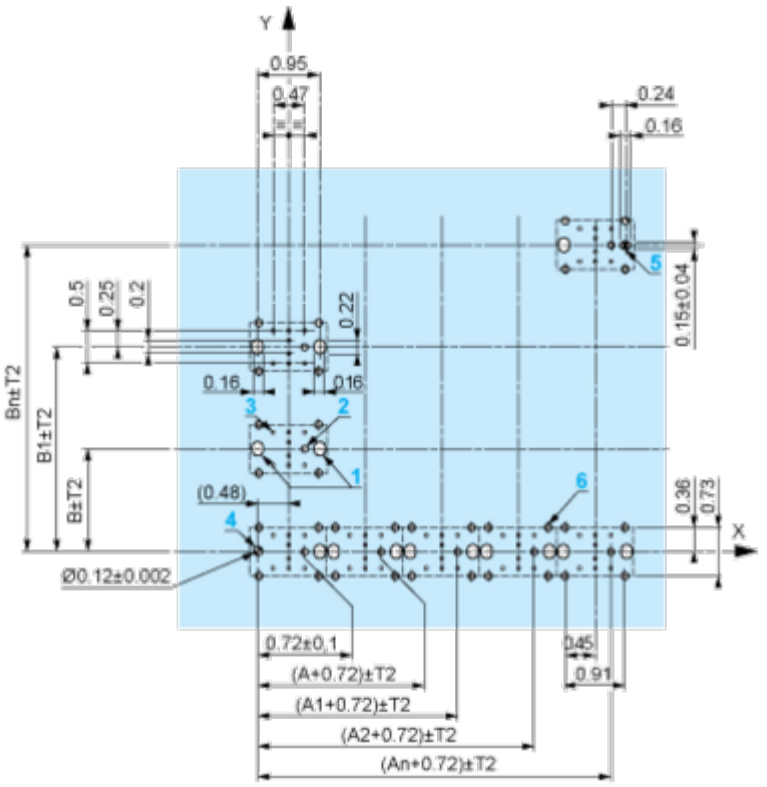


**A:** 1.18 in. min.
**B:** 1.57 in. min.

### General Tolerances of the Panel and Printed Circuit Board

The cumulative tolerance must not exceed 0.3 mm / 0.012 in: T1 + T2 = 0.3 mm max.

### Installation Precautions

- Minimum thickness of circuit board: 1.6 mm / 0.06 in.
- Cut-out diameter: 22.4 mm ± 0.1 / 0.88 in. ± 0.004
- Orientation of body/fixing collar ZB4 BZ009: ± 2°30' (excluding cut-outs marked **a** and **b**).
- Tightening torque of screws ZBZ 006: 0.6 N.m (5.3 lbf.in) max.
- Allow for one ZB4 BZ079 fixing collar/pillar and its fixing screws:
  - every 90 mm / 3.54 in. horizontally (X), and 120 mm / 4.72 in. vertically (Y).
  - with each selector switch head (ZB4 BD•, ZB4 BJ•, ZB4 BG•).

The fixing centers marked **a** and **b** are diagonally opposed and must align with those marked **4** and **5**.

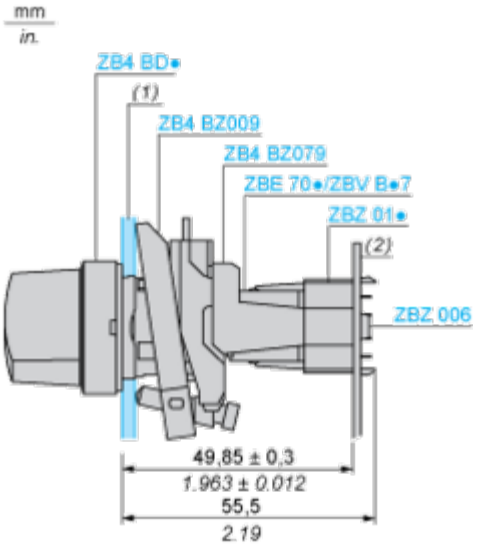


**(1)** Panel
**(2)** Printed circuit board

### Mounting of Adapter (Socket) ZBZ 01•

- **1** 2 elongated holes for ZBZ 006 screw access
- **2** 1 hole Ø 2.4 mm ± 0.05 / 0.09 in. ± 0.002 for centring adapter ZBZ 01•
- **3** 8 × Ø 1.2 mm / 0.05 in. holes
- **4** 1 hole Ø 2.9 mm ± 0.05 / 0.11 in. ± 0.002, for aligning the printed circuit board (with cut-out marked **a**)
- **5** 1 elongated hole for aligning the printed circuit board (with cut-out marked **b**)
- **6** 4 holes Ø 2.4 mm / 0.09 in. for clipping in adapter ZBZ 01•

Dimensions An + 18.1 relate to the Ø 2.4 mm ± 0.05 / 0.09 in. ± 0.002 holes for centring adapter ZBZ 01•.

Image of product / Alternate images

**Alternative**








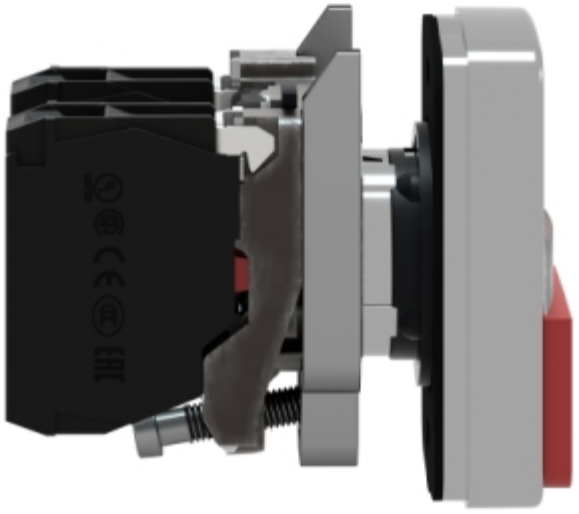



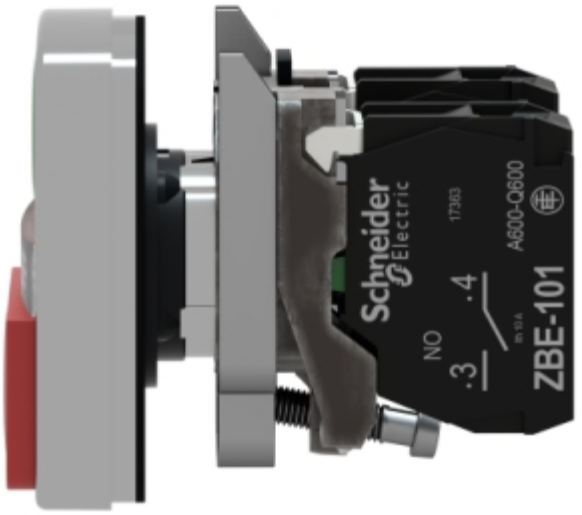
Schneider Electric
17363
A600-Q600
ZBE-101
NO
.3
.4