Product data sheet

Specifications



Illuminated push button, Harmony XB5, plastic, orange flush, 22mm, universal LED, plain lens, 1NO + 1NC, 110...120V AC

XB5AW35G5

Product availability: Stock - Normally stocked in distribution facility
Important message: A change in appearance may be noted on the product but does not affect its use in terms of function and safety. This makes it compatible with our Universal LED blocks

Main

Range of Product	Harmony XB5
Product or Component Type	Illuminated push-button
Device short name	XB5
Bezel material	Dark grey plastic
Fixing collar material	Plastic
Head type	Standard
Mounting diameter	0.9 in (22.5 mm)
Sale per indivisible quantity	1
Shape of signaling unit head	Round
Type of operator	spring return
Operator profile	Orange flush, unmarked
Operator additional information	With plain lens
Contacts type and composition	1 NO + 1 NC
Contact operation	Slow-break
Connections - terminals	Screw clamp terminals, <= 2 x 1.5 mm² with cable end IEC 60947-1 Screw clamp terminals, 1 x 0.22...2 x 2.5 mm² without cable end IEC 60947-1
Light source	Universal LED
Bulb base	Integral LED
[Us] rated supply voltage	110...120 V AC 50/60 Hz
Cap/operator or lens colour	Orange

Complementary

Height	1.7 in (42 mm)
Width	1.2 in (30 mm)
Depth	2.2 in (57 mm)
Terminals description ISO n°1	(21-22)NC (13-14)NO
Net Weight	0.123 lb(US) (0.056 kg)
Resistance to high pressure washer	1015.3 psi (7000000 Pa) 131 °F (55 °C) 0.1 m

Price is “List Price” and may be subject to a trade discount – check with your local distributor or retailer for actual price.

Disclaimer: This documentation is not intended as a substitute for and is not to be used for determining suitability or reliability of these products for specific user applications

Contacts usage	Standard contacts
Positive opening	With IEC 60947-5-1 appendix K
Operating travel	0.06 in (1.5 mm) NC changing electrical state) 0.1 in (2.6 mm) NO changing electrical state) 0.2 in (4.3 mm) total travel)
Operating force	3.5 N NC changing electrical state 3.8 N
Mechanical durability	10000000 cycles
Tightening torque	7.08…10.6 lbf.in (0.8…1.2 N.m) IEC 60947-1
Shape of screw head	Cross Philips no 1 Cross pozidriv No 1 Slotted flat Ø 4 mm Slotted flat Ø 5.5 mm
Contacts material	Silver alloy (Ag/Ni)
Short-circuit protection	10 A cartridge fuse gG IEC 60947-5-1
[Ith] conventional free air thermal current	10 A IEC 60947-5-1
[Ui] rated insulation voltage	600 V 3)IEC 60947-1
[Uimp] rated impulse withstand voltage	6 kV IEC 60947-1
[Ie] rated operational current	3 A 240 V, AC-15, A600 IEC 60947-5-1 6 A 120 V, AC-15, A600 IEC 60947-5-1 0.1 A 600 V, DC-13, Q600 IEC 60947-5-1 0.27 A 250 V, DC-13, Q600 IEC 60947-5-1 0.55 A 125 V, DC-13, Q600 IEC 60947-5-1 1.2 A 600 V, AC-15, A600 IEC 60947-5-1
Electrical durability	1000000 cycles, AC-15, 2 A 230 V 3600 cyc/h 0.5 IEC 60947-5-1 appendix C 1000000 cycles, AC-15, 3 A 120 V 3600 cyc/h 0.5 IEC 60947-5-1 appendix C 1000000 cycles, AC-15, 4 A 24 V 3600 cyc/h 0.5 IEC 60947-5-1 appendix C 1000000 cycles, DC-13, 0.2 A 110 V 3600 cyc/h 0.5 IEC 60947-5-1 appendix C 1000000 cycles, DC-13, 0.5 A 24 V 3600 cyc/h 0.5 IEC 60947-5-1 appendix C
Electrical reliability	Λ < 10exp(-6) 5 V, 1 mA in clean environment IEC 60947-5-4 Λ < 10exp(-8) 17 V, 5 mA in clean environment IEC 60947-5-4
Signalling type	Steady
Supply voltage limits	100…132 V AC
Current Consumption	14 mA
Service life	100000 h at rated voltage and 25 °C
Surge withstand	1 kV IEC 61000-4-5
Device presentation	Complete product

Environment

Protective treatment	TH
Ambient Air Temperature for Storage	-40…158 °F (-40…70 °C)
Ambient Air Temperature for Operation	-40…158 °F (-40…70 °C)
Overvoltage category	Class II conforming to IEC 60536
IP degree of protection	IP66 IEC 60529 IP69 IP69K IP67
Enclosure Type	UL type 4X/13
IK degree of protection	IK05 conforming to IEC 50102

Standards	UL 508 IEC 60947-5-4 JIS C8201-5-1 IEC 60947-1 IEC 60947-5-1 CSA C22.2 No 14 JIS C8201-1
Product Certifications	CSA LROS (Lloyds register of shipping) BV UL Listed DNV
Vibration resistance	5 gn (f= 2…500 Hz) conforming to IEC 60068-2-6
Shock resistance	30 gn 18 ms) half sine wave acceleration IEC 60068-2-27 50 gn 11 ms) half sine wave acceleration IEC 60068-2-27
Resistance to fast transients	2 kV IEC 61000-4-4
Resistance to electromagnetic fields	9.1 V/m (10 V/m) IEC 61000-4-3
Resistance to electrostatic discharge	6 kV on contact (on metal parts) IEC 61000-4-2 8 kV in free air (in insulating parts) IEC 61000-4-2
Electromagnetic emission	Class B IEC 55011

Ordering and shipping details

Category	US10CS222467
Discount Schedule	0CS2
GTIN	3389110904192
Returnability	Yes
Country of origin	FR

Packing Units

Unit Type of Package 1	PCE
Nbr. of units in pkg.	1
Package 1 Height	1.378 in (3.500 cm)
Package 1 Width	2.087 in (5.300 cm)
Package 1 Length	3.465 in (8.800 cm)
Package weight(Lbs)	1.894 oz (53.700 g)
Unit Type of Package 2	S02
Number of Units in Package 2	50
Package 2 Height	5.906 in (15.000 cm)
Package 2 Width	11.811 in (30.000 cm)
Package 2 Length	15.748 in (40.000 cm)
Package 2 Weight	6.466 lb(US) (2.933 kg)
Unit Type of Package 3	P06
Number of Units in Package 3	800
Package 3 Height	29.528 in (75.000 cm)
Package 3 Width	31.496 in (80.000 cm)
Package 3 Length	23.622 in (60.000 cm)
Package 3 Weight	121.109 lb(US) (54.934 kg)

Contractual warranty

Warranty (in months)	18

Environmental Data

Schneider Electric aims to achieve Net Zero status by 2050 through supply chain partnerships, lower impact materials, and circularity via our ongoing “Use Better, Use Longer, Use Again” campaign to extend product lifetimes and recyclability.

Environmental Data explained >

How we assess product sustainability >

Environmental footprint

Total lifecycle Carbon footprint	**0.8 kg CO2 eq.**
Carbon footprint of the manufacturing phase [A1 to A3]	**0.4 kg CO2 eq.**
Carbon footprint of the distribution phase [A4]	**0 kg CO2 eq.**
Carbon footprint of the installation phase [A5]	**0 kg CO2 eq.**
Carbon footprint of the use phase [B2, B3, B4, B6]	**0.2 kg CO2 eq.**
Carbon footprint of the end-of-life phase [C1 to C4]	**0.1 kg CO2 eq.**

Use Better

Materials and Substances

Average percentage of recycled plastic content	**22 %**
Average percentage of recycled metal content	**13 %**
Packaging made with recycled cardboard	**Yes**
Packaging without single use plastic	**Yes**
SCIP Number	**425812e5-011f-4fb4-ad1b-fc9cf9865300**
EU RoHS Directive	Compliant By Exemption
REACh Regulation	Reference contains Substances of Very High Concern above the threshold
California proposition 65	**WARNING: This product can expose you to chemicals including: Lead and lead compounds, which is known to the State of California to cause cancer and birth defects or other reproductive harm. For more information go to www.P65Warnings.ca.gov**

Use Longer

Lifetime extension

Product repairability index	**A**

Use Again

Repack and remanufacture

Circularity Profile	End of Life Information
Take-back	**No**
WEEE Label	**The product must be disposed on European Union markets following specific waste collection and never end up in rubbish bins.**

Dimensions Drawings

Dimensions

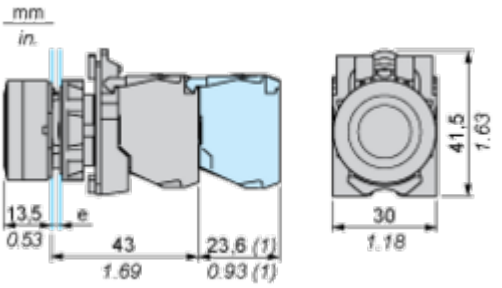

e: clamping thickness: 1 to 6 mm / 0.04 to 0.24 in.
(1) Additional row of contacts or double contact.

Mounting and Clearance

Panel Cut-out for Pushbuttons, Switches and Pilot Lights (Finished Holes, Ready for Installation)

Connection by Screw Clamp Terminals or Plug-in Connectors or on Printed Circuit Board

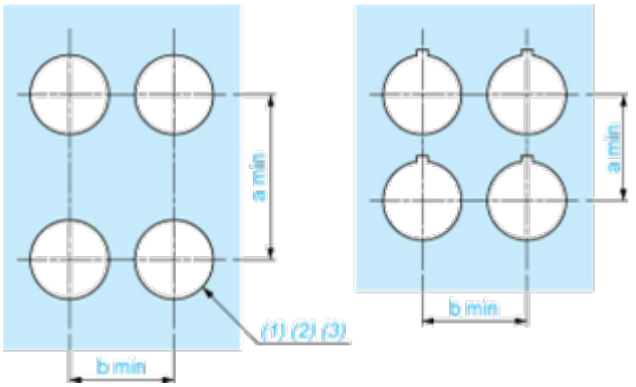

(1) Diameter on finished panel or support
(2) For selector switches and Emergency stop buttons, use of an anti-rotation plate type ZB5AZ902 is recommended.
(3) Ø22.5 mm recommended (Ø22.3 $_{0}^{+0.4}$) / Ø0.89 in. recommended (Ø0.88 in. $_{0}^{+0.016}$)

Connections	a in mm	a in in.	b in mm	b in in.
By screw clamp terminals or plug-in connector	40	1.57	30	1.18
By Faston connectors	45	1.77	32	1.26
On printed circuit board	30	1.18	30	1.18

Detail of Lug Recess

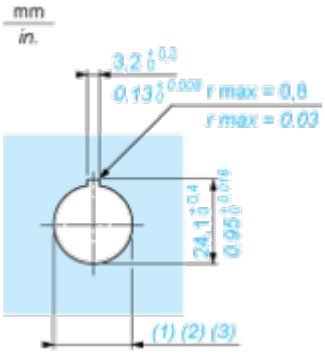

(1) Diameter on finished panel or support
(2) For selector switches and Emergency stop buttons, use of an anti-rotation plate type ZB5AZ902 is recommended.
(3) Ø22.5 mm recommended (Ø22.3 $_{0}^{+0.4}$) / Ø0.89 in. recommended (Ø0.88 in. $_{0}^{+0.016}$)

Image of product / Alternate images

Alternative


NC 2
NC 1
NO 3
NO 4




NO 3
4
X1
U N
X2
NC 1
2

Image of product in real life situation

