Product data sheet

Specifications



Panel mounted RJ45 port, Harmony XB5, plastic, 22mm, for ethernet interface, RJ45 jack

XB5PRJ45

Discontinued on: May 31, 2026

Discontinued

Product availability: Stock - Normally stocked in distribution facility

Main

Range of Product	Harmony XB5
Product or Component Type	Panel mounted RJ45 port
Device short name	XB5P
Bezel material	Plastic
Fixing collar material	Plastic
Mounting diameter	0.9 in (22 mm)
Sale per indivisible quantity	1

Complementary

Thickness	0.2 in (6 mm) without protection cover 0.06…0.2 in (1.5…5 mm) with protection cover plastic 0.06…0.2 in (1.5…5 mm) with protection cover rigid plastic 0.06…0.10 in (1.5…2.5 mm) with protection cover metal
Integrated connection type	RJ45 Ethernet 10 Gbit/s
Minimum number of matings	750 cycles
Tightening torque	13.3 lbf.in (1.5 N.m)
Height	1.1 in (28 mm)
Width	1.1 in (28 mm)
Depth	1.4 in (36 mm)
Net Weight	0.0586 lb(US) (0.0266 kg)

Environment

IP degree of protection	IP20 front: conforming to IEC 60529 IP20 back: conforming to IEC 60529
Ambient Air Temperature for Operation	-40…158 °F (-40…70 °C)
Ambient Air Temperature for Storage	-40…158 °F (-40…70 °C)
Vibration resistance	5 gn 10…500 Hz) IEC 60068-2-6
Standards	IEC 60603-7
Product Certifications	UL Listed CSA

Ordering and shipping details

Category	US10CS200028

Price is “List Price” and may be subject to a trade discount – check with your local distributor or retailer for actual price.

Disclaimer: This documentation is not intended as a substitute for and is not to be used for determining suitability or reliability of these products for specific user applications

Discount Schedule	0CS2
GTIN	3606481194213
Returnability	Yes
Country of origin	DE

Packing Units

Unit Type of Package 1	PCE
Nbr. of units in pkg.	1
Package 1 Height	1.417 in (3.600 cm)
Package 1 Width	3.189 in (8.100 cm)
Package 1 Length	3.268 in (8.300 cm)
Package weight(Lbs)	0.882 oz (25.000 g)
Unit Type of Package 2	S02
Number of Units in Package 2	100
Package 2 Height	5.9 in (15 cm)
Package 2 Width	11.8 in (30 cm)
Package 2 Length	15.7 in (40 cm)
Package 2 Weight	6.283 lb(US) (2.850 kg)
Unit Type of Package 3	P06
Number of Units in Package 3	1600
Package 3 Height	29.528 in (75.000 cm)
Package 3 Width	23.622 in (60.000 cm)
Package 3 Length	31.496 in (80.000 cm)
Package 3 Weight	122.577 lb(US) (55.600 kg)

Contractual warranty

Warranty (in months)	18

Environmental Data

Schneider Electric aims to achieve Net Zero status by 2050 through supply chain partnerships, lower impact materials, and circularity via our ongoing “Use Better, Use Longer, Use Again” campaign to extend product lifetimes and recyclability.

Environmental Data explained >

How we assess product sustainability >

Environmental footprint

Total lifecycle Carbon footprint	**0.3 kg CO2 eq.**
Carbon footprint of the manufacturing phase [A1 to A3]	**0.2 kg CO2 eq.**
Carbon footprint of the distribution phase [A4]	**0 kg CO2 eq.**
Carbon footprint of the installation phase [A5]	**0 kg CO2 eq.**
Carbon footprint of the use phase [B2, B3, B4, B6]	**0 kg CO2 eq.**
Carbon footprint of the end-of-life phase [C1 to C4]	**0 kg CO2 eq.**
Environmental Disclosure	**Product Environmental Profile**

Use Better

Materials and Substances

Packaging made with recycled cardboard	**Yes**
Packaging without single use plastic	**No**
EU RoHS Directive	**Compliant**
REACh Regulation	**Free of Substances of Very High Concern above the threshold**
California proposition 65	**WARNING: This product can expose you to chemicals including: Lead and lead compounds, which is known to the State of California to cause cancer and birth defects or other reproductive harm. For more information go to www.P65Warnings.ca.gov**

Use Longer

Lifetime extension

Product repairability index	**A**

Use Again

Repack and remanufacture

Recyclability potential, in %	**88**
Circularity Profile	**No need of specific recycling operations**
Take-back	**No**

Dimensions Drawings

Dimensions

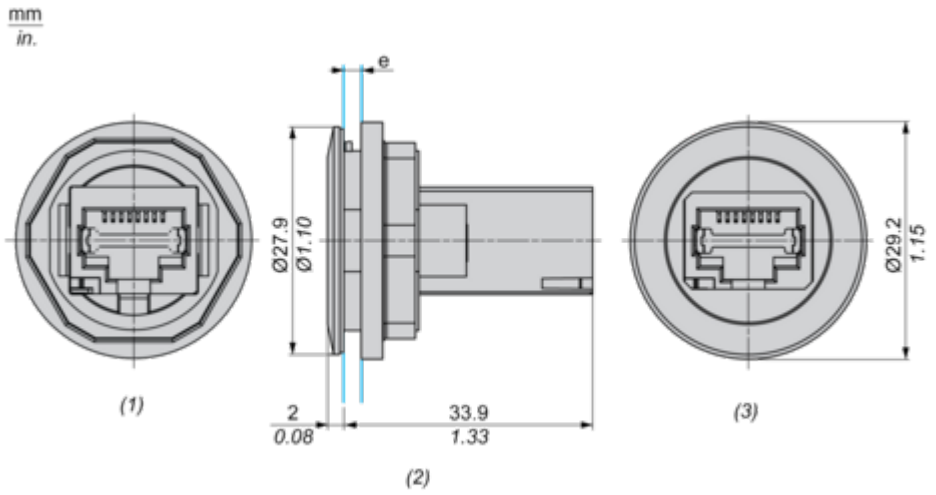

(1) Back view
(2) Side view
(3) Front view
(e)

	Clamping thickness without accessory: 1.5 mm to 5 mm / 0.05 in to 0.19 in Clamping thickness with ZBSP1 & ZBSP2: 1.5 mm to 5 mm / 0.05 in to 0.19 in Clamping thickness with ZBSP3: 1.5 mm to 2.5 mm / 0.05 in to 0.10 in

Mounting and Clearance

Panel Cut-out for Panel Mounted RJ45 Port

Connection by Screw Clamp Terminals or Plug-in Connectors

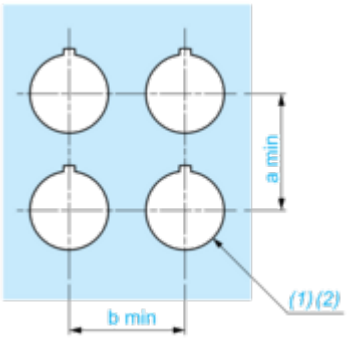

(1) Diameter on finished panel or support
(2) Ø22.5 mm recommended (Ø22.3 0+0.4) / Ø0.89 in. recommended (Ø0.88 in. 0+0.016)

Connections	a in mm	a in in.	b in mm	b in in.
By screw clamp terminal or plug-in connector	35	1.38	35	1.38

Panel Cut-out

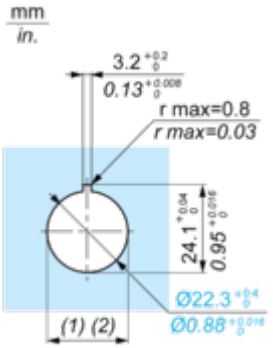

(1) Diameter on finished panel or support
(2) Ø22.5 mm recommended (Ø22.3 0+0.4) / Ø0.89 in. recommended (Ø0.88 in. 0+0.016)

Image of product / Alternate images

Alternative

