Product data sheet

Specifications



Pack with 1 wireless push button + 1 configurable receiver + 1 set of 10 colored caps, Harmony XB5R, plastic, 22mm, 24...240V AC DC

XB5RMA04

Product availability: Stock - Normally stocked in distribution facility

Main

Range of Product	Harmony XB5R
Product or Component Type	Wireless and batteryless package
Device short name	XB5R
Head material	Plastic
frequency	2405 MHz transmitter 2405 MHz receiver
emission class	5M00G7W
Antenna type	Omnidirectional

Complementary

Control type	Wireless and batteryless push-button handy box assembled on fixing collar
Type of receiver	Programmable receiver 2 relays)
[Us] Rated Supply Voltage	24...240 V AC/DC 50/60 Hz
Kit composition	1 transmitter 1 set of caps 1 receiver 1 fixing collars 1 0.9 in (22 mm) 1 push-button head 0.9 in (22 mm) 1 handy box
Status LED	1 LED Green power ON 2 LEDs Green relay ON 2 LEDs Green function mode 1 LED green and yellow reception signal
Communication port protocol	Zigbee IEEE 802.15.4
Max power consumption in W	1 mW
Number of Channels	1
Modulation technique	O-QPSK
Bandwidth	5 MHz
Antenna gain	0 dBi
[Us] rated supply voltage	24...240 V

Environment

Product Certifications	UL CCC GOST CSA C-tick

Price is “List Price” and may be subject to a trade discount – check with your local distributor or retailer for actual price.

Disclaimer: This documentation is not intended as a substitute for and is not to be used for determining suitability or reliability of these products for specific user applications

Marking	CE
Standards	CSA C22.2 No 14 IEC 60947-5-1 UL 508 IEC 60947-1
Radio agreement	SRRC RSS ARIB T66 FCC ICASA ANATEL

Ordering and shipping details

Category	US1000I22470
Discount Schedule	000I
GTIN	3606480334474
Returnability	Yes
Country of origin	FR

Packing Units

Unit Type of Package 1	PCE
Nbr. of units in pkg.	1
Package 1 Height	3.661 in (9.300 cm)
Package 1 Width	4.134 in (10.500 cm)
Package 1 Length	4.331 in (11.000 cm)
Package weight(Lbs)	10.547 oz (299.000 g)
Unit Type of Package 2	S03
Number of Units in Package 2	16
Package 2 Height	11.8 in (30 cm)
Package 2 Width	11.8 in (30 cm)
Package 2 Length	15.7 in (40 cm)
Package 2 Weight	11.389 lb(US) (5.166 kg)

Contractual warranty

Warranty (in months)	18

Environmental Data

Schneider Electric aims to achieve Net Zero status by 2050 through supply chain partnerships, lower impact materials, and circularity via our ongoing “Use Better, Use Longer, Use Again” campaign to extend product lifetimes and recyclability.

Environmental Data explained >

How we assess product sustainability >

Environmental footprint

Total lifecycle Carbon footprint	**31 kg CO2 eq.**
Carbon footprint of the manufacturing phase [A1 to A3]	**5 kg CO2 eq.**
Carbon footprint of the distribution phase [A4]	**0.1 kg CO2 eq.**
Carbon footprint of the installation phase [A5]	**0.1 kg CO2 eq.**
Carbon footprint of the use phase [B2, B3, B4, B6]	**25 kg CO2 eq.**
Carbon footprint of the end-of-life phase [C1 to C4]	**0.4 kg CO2 eq.**
Environmental Disclosure	**Product Environmental Profile**

Use Better

Materials and Substances

Packaging made with recycled cardboard	**Yes**
Packaging without single use plastic	**No**
SCIP Number	**25b7f895-3732-43c8-9910-ef6005058640**
EU RoHS Directive	**Compliant By Exemption**
REACh Regulation	**Reference contains Substances of Very High Concern above the threshold**
California proposition 65	**WARNING: This product can expose you to chemicals including: Nickel compounds, which is known to the State of California to cause cancer, and Di-isodecyl phthalate (DIDP), which is known to the State of California to cause birth defects or other reproductive harm. For more information go to www.P65Warnings.ca.gov**

Use Longer

Lifetime extension

Product repairability index	**A**

Use Again

Repack and remanufacture

Recyclability potential, in %	**0**
Circularity Profile	**End of Life Information**
Take-back	**No**
WEEE Label	**The product must be disposed on European Union markets following specific waste collection and never end up in rubbish bins.**

Dimensions Drawings

Programmable Receiver

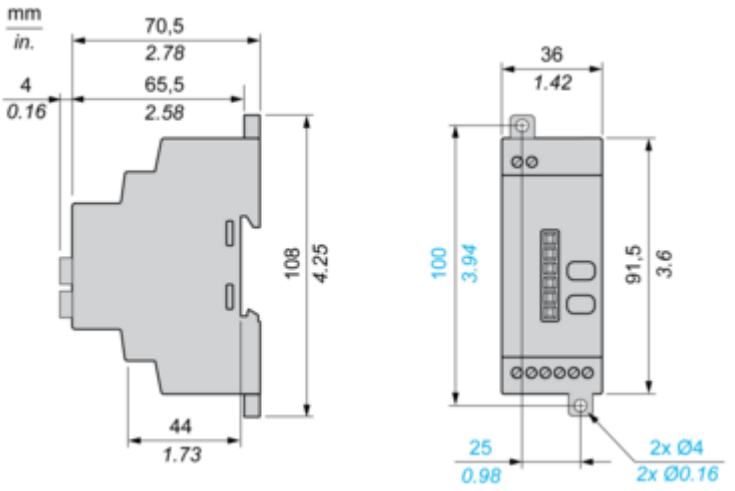

Wireless and Batteryless Pushbutton - Transmitter

Plastic Handy Box for Mobile Use

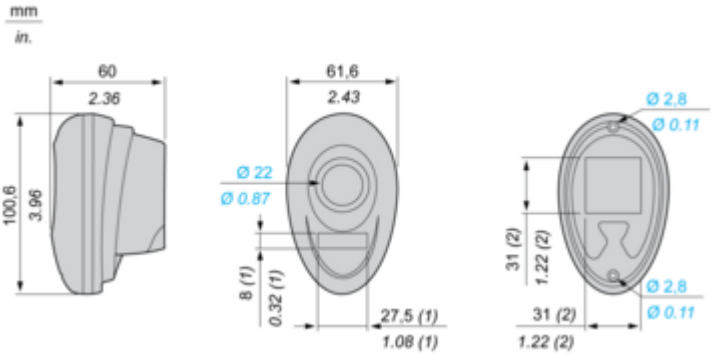

(1) Location for ZBY0101T legend.
(2) Location for magnet to be stuck on by the customer.

Mounting and Clearance

Receiver Clearance

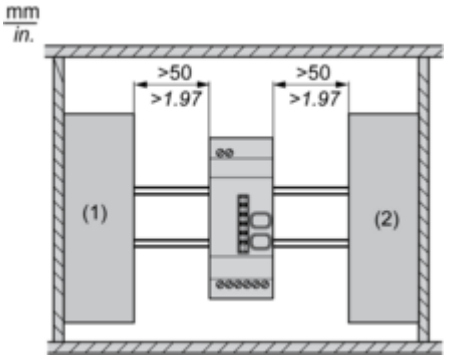

(1) Drive
(2) Power Supply or PLC

Receiver Mounting

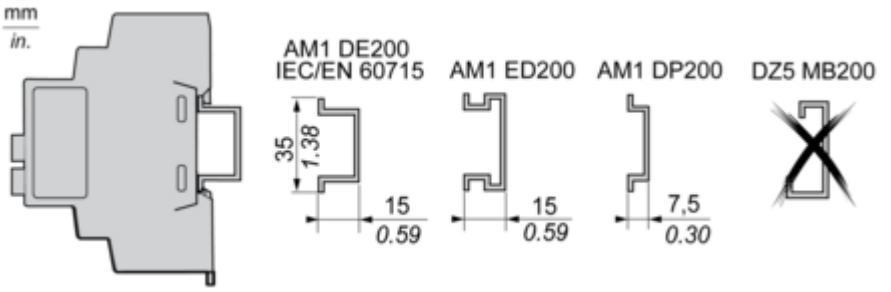

Connections and Schema

Programmable Receiver

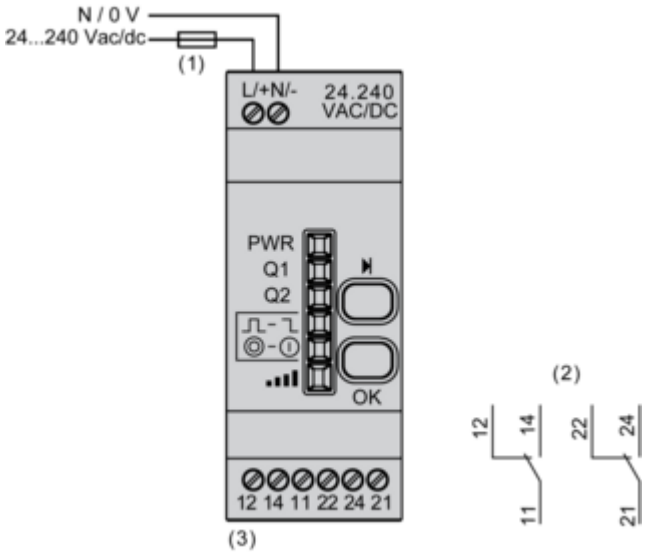

(1) 500 mA
(2) Output contacts
(3) Imax = 3 A