# Product data sheet

Specifications



## Biometric switch bistable, Harmony XB5S, plastic, 22mm, connection by 2m cable, 24V AC DC

XB5S1B2L2

**Product availability: Stock - Normally stocked in distribution facility**

## Main

| | |
|---|---|
| **Product or Component Type** | Biometric switch |
| **Product Specific Application** | Industrial machines<br>Materials handling |
| **Device short name** | XB5S |
| **Bezel material** | Dark grey plastic |
| **Mounting diameter** | 0.9 in (22 mm) |
| **Output Type** | PNP |
| **Sale per indivisible quantity** | 1 |
| **IP degree of protection** | IP20 IEC 60529 rear face)<br>IP65 IEC 60529 front face) |
| **Type of operator** | Stay put |
| **Operator position information** | 2 positions |
| **Operator profile** | fingerprint reader |
| **Connections - terminals** | 1 pre-wired cable, 3 x 0.34 mm² |
| **Memory usage** | 200 users with up to 2 fingerprints per user |

## Complementary

| | |
|---|---|
| **Enclosure Material** | Polyamide PA66 |
| **Cable insulation material** | PvR |
| **Operating position** | Horizontal position<br>Flat surface installation<br>Vertical surface installation |
| **Function of module** | Bi-stable |
| **Net Weight** | 0.37 lb(US) (0.17 kg) |
| **Marking** | CE |
| **Local signalling** | 1 LED (green) for output state indicator<br>1 LED (orange) for administrator's registration mode<br>1 LED (orange) for operator's registration mode<br>1 LED (red) for error<br>1 LED (red) for reset |
| **Short-circuit protection** | 250 mA external fuse gG |
| **[Us] rated supply voltage** | 24 V DC |
| **Electrical connection** | free wire ends 3 6.6 ft (2 m) |
| **Supply voltage limits** | 20…30 V DC |

Price is “List Price” and may be subject to a trade discount – check with your local distributor or retailer for actual price.

Disclaimer: This documentation is not intended as a substitute for and is not to be used for determining suitability or reliability of these products for specific user applications

| | |
|---|---|
| **Protection Type** | Short-circuit<br>Reverse polarity<br>Overload protection |
| **Maximum switching current** | 200 mA |
| **[Ures] residual voltage** | 1 V closed state |
| **Current consumption** | <= 70 mA no-load |
| **Maximum delay first up** | 3 s + 0.5 ms per user registered |
| **Maximum delay recovery** | 1.5 s |
| **Maximum delay response** | 1.5 s |

## Environment

| | |
|---|---|
| **Range of Product** | Harmony XB5S |
| **Ambient Air Temperature for Storage** | -13…158 °F (-25…70 °C) |
| **Ambient Air Temperature for Operation** | 23…122 °F (-5…50 °C) |
| **NEMA degree of protection** | NEMA 12 |
| **Standards** | IEC 61000-6-4<br>IEC 61000-6-2 |
| **Product Certifications** | UL<br>CSA |
| **Vibration resistance** | +/- 3 mm (f= 5…9 Hz) conforming to IEC 60068-2-6<br>1 gn (f= 9…500 Hz) conforming to IEC 60068-2-6 |
| **Shock resistance** | 50 gn 11 ms IEC 60068-2-27 |

## Ordering and shipping details

| | |
|---|---|
| **Category** | US1000I22471 |
| **Discount Schedule** | 000I |
| **GTIN** | 3606480061394 |
| **Returnability** | Yes |
| **Country of origin** | FR |

## Packing Units

| | |
|---|---|
| **Unit Type of Package 1** | PCE |
| **Nbr. of units in pkg.** | 1 |
| **Package 1 Height** | 2.7 in (6.8 cm) |
| **Package 1 Width** | 3.7 in (9.5 cm) |
| **Package 1 Length** | 7.3 in (18.5 cm) |
| **Package weight(Lbs)** | 6.9 oz (196.0 g) |
| **Unit Type of Package 2** | S02 |
| **Number of Units in Package 2** | 8 |
| **Package 2 Height** | 5.9 in (15.0 cm) |
| **Package 2 Width** | 11.8 in (30.0 cm) |
| **Package 2 Length** | 15.7 in (40.0 cm) |
| **Package 2 Weight** | 4.198 lb(US) (1.904 kg) |

## Contractual warranty

| | |
|---|---|
| **Warranty (in months)** | 18 |

## Environmental Data

Schneider Electric aims to achieve Net Zero status by 2050 through supply chain partnerships, lower impact materials, and circularity via our ongoing “Use Better, Use Longer, Use Again” campaign to extend product lifetimes and recyclability.

Environmental Data explained >

How we assess product sustainability >

### Environmental footprint

| | |
|---|---|
| Total lifecycle Carbon footprint | **173 kg CO2 eq.** |
| Carbon footprint of the manufacturing phase [A1 to A3] | **5 kg CO2 eq.** |
| Carbon footprint of the distribution phase [A4] | **0 kg CO2 eq.** |
| Carbon footprint of the installation phase [A5] | **0.1 kg CO2 eq.** |
| Carbon footprint of the use phase [B2, B3, B4, B6] | **168 kg CO2 eq.** |
| Carbon footprint of the end-of-life phase [C1 to C4] | **0.2 kg CO2 eq.** |
| Environmental Disclosure | Product Environmental Profile |

## Use Better

### Materials and Substances

| | |
|---|---|
| Packaging made with recycled cardboard | **No** |
| Packaging without single use plastic | **No** |
| EU RoHS Directive | Compliant By Exemption |
| REACh Regulation | Reference contains Substances of Very High Concern above the threshold |
| California proposition 65 | **WARNING: This product can expose you to chemicals including: Lead and lead compounds, which is known to the State of California to cause cancer and birth defects or other reproductive harm. For more information go to www.P65Warnings.ca.gov** |

## Use Longer

### Lifetime extension

| | |
|---|---|
| Product repairability index | **A** |

## Use Again

### Repack and remanufacture

| | |
|---|---|
| Recyclability potential, in % | **0** |
| Circularity Profile | End of Life Information |
| Take-back | **No** |
| WEEE Label | **The product must be disposed on European Union markets following specific waste collection and never end up in rubbish bins.** |

Dimensions Drawings

**Dimensions of Biometric Switches**

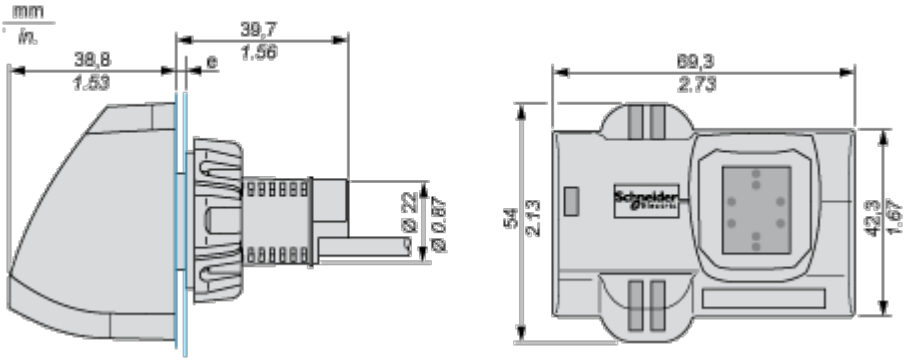


e: 1 to 6 mm / 0.04 to 0.24 in.

## Connections and Schema

### Cable with PNP Output

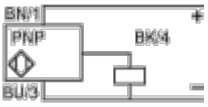


BU: Blue

BN: Brown

BK: Black

Image of product / Alternate images

**Alternative**






RGPD


RGPD

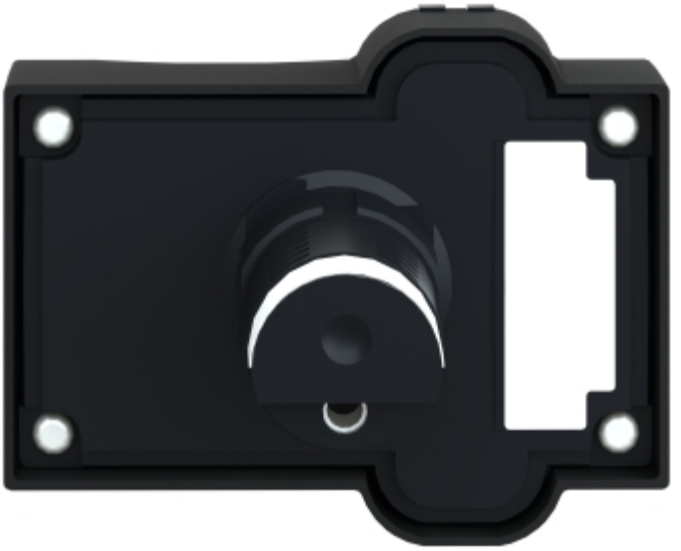



Image of product in real life situation

