Product data sheet

Specifications



Biometric switch monostable, Harmony XB5S, plastic, 22mm, connection by 2m cable, 24V AC DC

XB5S2B2L2

Product availability: Stock - Normally stocked in distribution facility

Main

Product or Component Type	Biometric switch
Product Specific Application	Industrial machines Materials handling
Device short name	XB5S
Bezel material	Dark grey plastic
Mounting diameter	0.9 in (22 mm)
Output Type	PNP
Sale per indivisible quantity	1
IP degree of protection	IP20 IEC 60529 rear face) IP65 IEC 60529 front face)
Type of operator	Momentary
Operator profile	fingerprint reader
Connections - terminals	1 pre-wired cable, 3 x 0.34 mm²
Memory usage	200 users with up to 2 fingerprints per user

Complementary

Enclosure Material	Polyamide PA66
Cable insulation material	PvR
Operating position	Flat surface installation Horizontal position Vertical surface installation
Function of module	Monostable
Net Weight	0.37 lb(US) (0.17 kg)
Marking	CE
Local signalling	1 LED (green) for output state indicator 1 LED (orange) for administrator's registration mode 1 LED (orange) for operator's registration mode 1 LED (red) for error 1 LED (red) for reset
Short-circuit protection	250 mA external fuse gG
[Us] rated supply voltage	24 V DC
Electrical connection	free wire ends 3 6.6 ft (2 m)
Supply voltage limits	20…30 V DC
Protection Type	Overload protection Short-circuit Reverse polarity

Price is “List Price” and may be subject to a trade discount – check with your local distributor or retailer for actual price.

Disclaimer: This documentation is not intended as a substitute for and is not to be used for determining suitability or reliability of these products for specific user applications

Maximum switching current	200 mA
[Ures] residual voltage	1 V closed state
Current consumption	<= 70 mA no-load
Maximum delay first up	3 s + 0.5 ms per user registered
Maximum delay recovery	1.5 s
Maximum delay response	1.5 s

Environment

Range of Product	Harmony XB5S
Ambient Air Temperature for Storage	-13…158 °F (-25…70 °C)
Ambient Air Temperature for Operation	23…122 °F (-5…50 °C)
NEMA degree of protection	NEMA 12
Standards	IEC 61000-6-4 IEC 61000-6-2
Product Certifications	UL CSA
Vibration resistance	+/- 3 mm (f= 5…9 Hz) conforming to IEC 60068-2-6 1 gn (f= 9…500 Hz) conforming to IEC 60068-2-6
Shock resistance	50 gn 11 ms IEC 60068-2-27

Ordering and shipping details

Category	US1000I22471
Discount Schedule	000I
GTIN	3606480061417
Returnability	Yes
Country of origin	FR

Packing Units

Unit Type of Package 1	PCE
Nbr. of units in pkg.	1
Package 1 Height	2.559 in (6.500 cm)
Package 1 Width	3.740 in (9.500 cm)
Package 1 Length	7.283 in (18.500 cm)
Package weight(Lbs)	7.231 oz (205.000 g)
Unit Type of Package 2	S03
Number of Units in Package 2	24
Package 2 Height	11.811 in (30.000 cm)
Package 2 Width	11.811 in (30.000 cm)
Package 2 Length	15.748 in (40.000 cm)
Package 2 Weight	11.698 lb(US) (5.306 kg)

Contractual warranty

Warranty (in months)	18

Environmental Data

Schneider Electric aims to achieve Net Zero status by 2050 through supply chain partnerships, lower impact materials, and circularity via our ongoing “Use Better, Use Longer, Use Again” campaign to extend product lifetimes and recyclability.

Environmental Data explained >

How we assess product sustainability >

Environmental footprint

Total lifecycle Carbon footprint	**61 kg CO2 eq.**
Carbon footprint of the manufacturing phase [A1 to A3]	**4 kg CO2 eq.**
Carbon footprint of the distribution phase [A4]	**0 kg CO2 eq.**
Carbon footprint of the installation phase [A5]	**0.1 kg CO2 eq.**
Carbon footprint of the use phase [B2, B3, B4, B6]	**56 kg CO2 eq.**
Carbon footprint of the end-of-life phase [C1 to C4]	**0.2 kg CO2 eq.**
Environmental Disclosure	Product Environmental Profile

Use Better

Materials and Substances

Packaging made with recycled cardboard	**No**
Packaging without single use plastic	**No**
EU RoHS Directive	Compliant By Exemption
REACh Regulation	Reference contains Substances of Very High Concern above the threshold
California proposition 65	**WARNING: This product can expose you to chemicals including: Lead and lead compounds, which is known to the State of California to cause cancer and birth defects or other reproductive harm. For more information go to www.P65Warnings.ca.gov**

Use Longer

Lifetime extension

Product repairability index	**A**

Use Again

Repack and remanufacture

Recyclability potential, in %	**2**
Circularity Profile	End of Life Information
Take-back	**No**
WEEE Label	**The product must be disposed on European Union markets following specific waste collection and never end up in rubbish bins.**

Dimensions Drawings

Dimensions of Biometric Switches

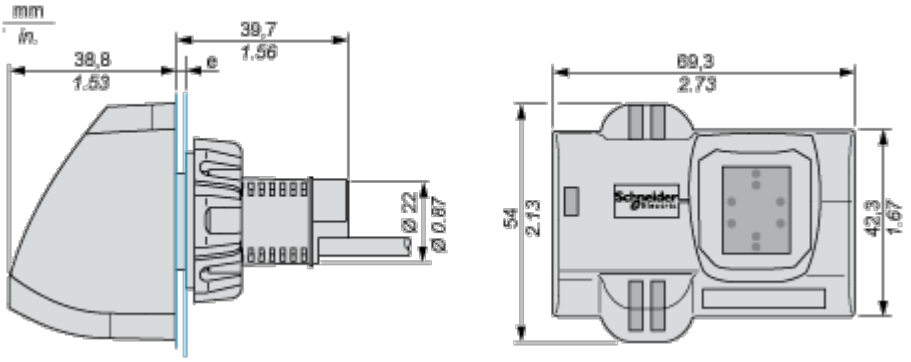

e: 1 to 6 mm / 0.04 to 0.24 in.

Connections and Schema

Cable with PNP Output

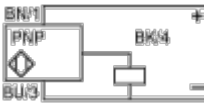

BU: Blue

BN: Brown

BK: Black

Image of product / Alternate images

Alternative











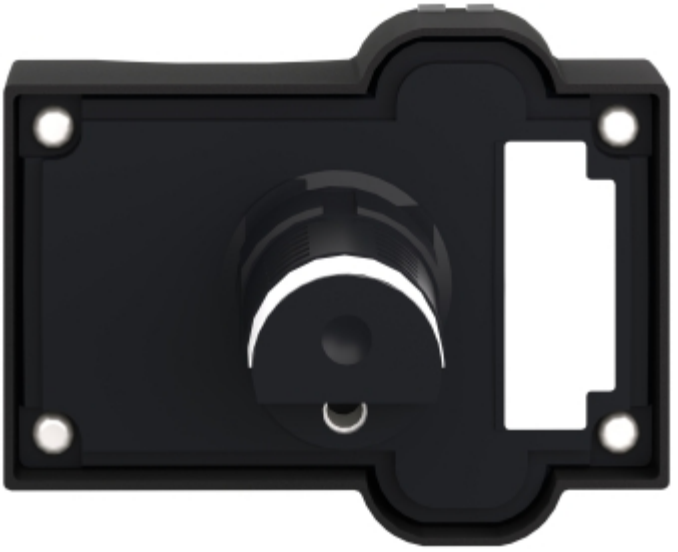

Image of product in real life situation

