# Product data sheet

Specifications




## Biometric switch monostable RGPD, Harmony XB5S, plastic, 22mm, USB, connection by 2m cable, 24V AC DC

XB5S9B2L2

Discontinued

Discontinued on: Nov 30, 2025

**Product availability: Non-Stock - Not normally stocked in distribution facility**

## Main

| | |
|---|---|
| **Product or Component Type** | Biometric switch RGPD |
| **Product Specific Application** | Materials handling<br>Industrial machines |
| **Device short name** | XB5S |
| **Bezel material** | Plastic |
| **Mounting diameter** | 0.9 in (22 mm) |
| **Output Type** | PNP |
| **Sale per indivisible quantity** | 1 |
| **IP degree of protection** | IP20 IEC 60529 rear face)<br>IP65 IEC 60529 front face) |
| **Type of operator** | Momentary |
| **Operator profile** | fingerprint reader |
| **Connections - terminals** | 1 pre-wired cable, 3 x 0.11 mm² |
| **Memory usage** | 200 users with up to 2 fingerprints per user |

## Complementary

| | |
|---|---|
| **Software Designation** | XB5SSoft |
| **Enclosure Material** | Polyamide PA66 |
| **Cable insulation material** | PvR |
| **Operating position** | Vertical surface installation<br>Flat surface installation<br>Horizontal position |
| **Function of module** | Monostable |
| **Net Weight** | 0.445 lb(US) (0.202 kg) |
| **Marking** | CE |
| **port protocol** | USB |
| **Connector type** | USB type A male 3.3 ft (1 m) |
| **Local signalling** | 1 LED (green) for output state indicator<br>1 LED (red) for error |
| **Short-circuit protection** | 250 mA external fuse gG |
| **[Us] rated supply voltage** | 24 V DC |

Price is “List Price” and may be subject to a trade discount – check with your local distributor or retailer for actual price.

Disclaimer: This documentation is not intended as a substitute for and is not to be used for determining suitability or reliability of these products for specific user applications

| | |
|---|---|
| **Electrical connection** | free wire ends 3 6.6 ft (2 m) |
| **Supply voltage limits** | 20…30 V DC |
| **Protection Type** | Reverse polarity<br>Short-circuit<br>Overload protection |
| **Maximum switching current** | 200 mA |
| **[Ures] residual voltage** | 1 V closed state |
| **Current consumption** | <= 70 mA no-load |
| **Maximum delay first up** | 3 s + 0.5 ms per user registered |
| **Maximum delay recovery** | 1.5 s |
| **Maximum delay response** | 1.5 s |

## Environment

| | |
|---|---|
| **Range of Product** | Harmony XB5S |
| **Ambient Air Temperature for Storage** | -13…158 °F (-25…70 °C) |
| **Ambient Air Temperature for Operation** | 23…122 °F (-5…50 °C) |
| **NEMA degree of protection** | NEMA 12 |
| **Standards** | IEC 61000-6-4<br>IEC 61000-6-2 |
| **Product Certifications** | CSA<br>UL |
| **Vibration resistance** | +/- 3 mm (f= 5…9 Hz) conforming to IEC 60068-2-6<br>1 gn (f= 9…500 Hz) conforming to IEC 60068-2-6 |
| **Shock resistance** | 50 gn 11 ms IEC 60068-2-27 |

## Ordering and shipping details

| | |
|---|---|
| **Category** | US1000I22471 |
| **Discount Schedule** | 000I |
| **GTIN** | 3606489915513 |
| **Returnability** | Yes |

## Packing Units

| | |
|---|---|
| **Unit Type of Package 1** | PCE |
| **Nbr. of units in pkg.** | 1 |
| **Package 1 Height** | 2.795 in (7.100 cm) |
| **Package 1 Width** | 3.937 in (10.000 cm) |
| **Package 1 Length** | 7.283 in (18.500 cm) |
| **Package weight(Lbs)** | 6.843 oz (194.000 g) |

## Contractual warranty

| | |
|---|---|
| **Warranty (in months)** | 18 |

## Environmental Data

Schneider Electric aims to achieve Net Zero status by 2050 through supply chain partnerships, lower impact materials, and circularity via our ongoing “Use Better, Use Longer, Use Again” campaign to extend product lifetimes and recyclability.

Environmental Data explained >

How we assess product sustainability >

### Environmental footprint

| | |
|---|---|
| Total lifecycle Carbon footprint | **173 kg CO2 eq.** |
| Carbon footprint of the manufacturing phase [A1 to A3] | **5 kg CO2 eq.** |
| Carbon footprint of the distribution phase [A4] | **0 kg CO2 eq.** |
| Carbon footprint of the installation phase [A5] | **0.1 kg CO2 eq.** |
| Carbon footprint of the use phase [B2, B3, B4, B6] | **168 kg CO2 eq.** |
| Carbon footprint of the end-of-life phase [C1 to C4] | **0.2 kg CO2 eq.** |
| Environmental Disclosure | **Product Environmental Profile** |

## Use Better

### Materials and Substances

| | |
|---|---|
| Packaging made with recycled cardboard | **Yes** |
| Packaging without single use plastic | **Yes** |
| EU RoHS Directive | **Compliant By Exemption** |
| REACh Regulation | **Reference contains Substances of Very High Concern above the threshold** |

## Use Longer

### Lifetime extension

| | |
|---|---|
| Product repairability index | **A** |

## Use Again

### Repack and remanufacture

| | |
|---|---|
| Circularity Profile | **End of Life Information** |
| Take-back | **No** |
| WEEE Label | **The product must be disposed on European Union markets following specific waste collection and never end up in rubbish bins.** |

Dimensions Drawings

**Dimensions of Biometric Switches**

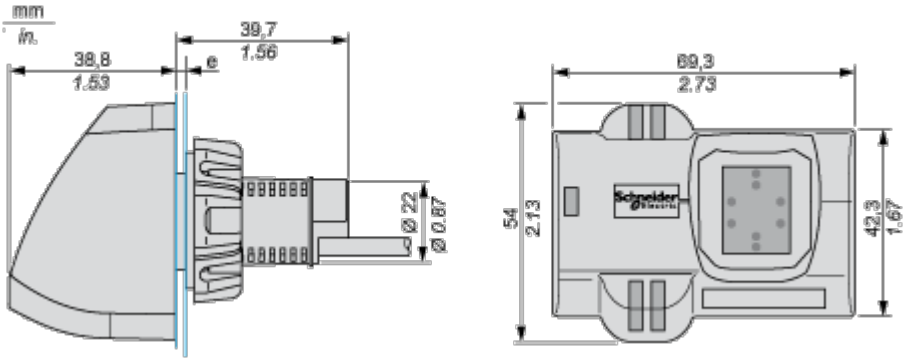


e: 1 to 6 mm / 0.04 to 0.24 in.

Connections and Schema

**Cable with PNP Output**

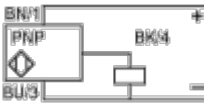


BU: Blue

BN: Brown

BK: Black

Image of product / Alternate images

**Alternative**






RGPD


RGPD

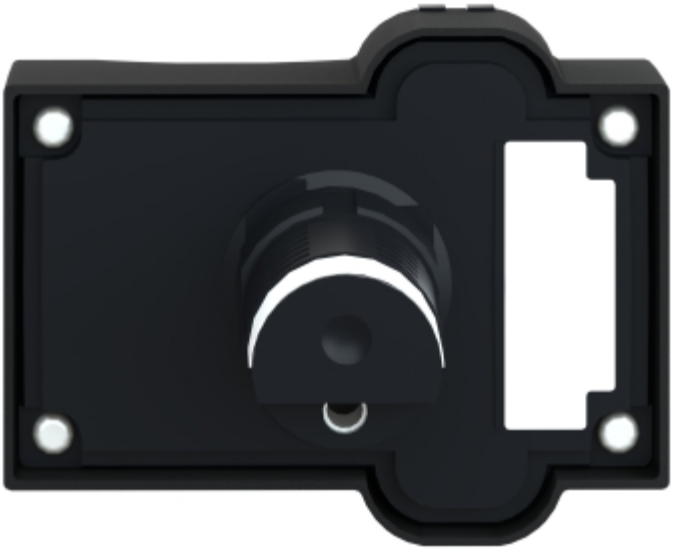



Image of product in real life situation

