Product data sheet

Specifications



Complete pilot light, Harmony XB6, round green, plastic, 16mm, integral LED 12...24V

XB6AV3BB

Product availability: Stock - Normally stocked in distribution facility

Main

Range of Product	Harmony XB6
Product or Component Type	Complete pilot light
Device short name	XB6
Bezel material	Plastic
Mounting diameter	0.6 in (16 mm)
Sale per indivisible quantity	1
Shape of signaling unit head	Round
Cap/operator or lens colour	Green
Light source	LED
Bulb base	Integral LED
Light block supply	Direct
[Us] rated supply voltage	12...24 V AC/DC

Complementary

Height	0.7 in (18 mm)
Width	0.7 in (18 mm)
Depth	2.2 in (57 mm)
Terminals description ISO n°1	(+ -)PL
Net Weight	0.033 lb(US) (0.015 kg)
Operating position	Any position
Connections - terminals	Faston connectors 2.8 x 0.5 mm
[Ui] rated insulation voltage	250 V 2)IEC 60947-1
[Uimp] rated impulse withstand voltage	4 kV IEC 60947-1
Signalling type	Steady
Supply voltage limits	6…30 V AC/DC
Current Consumption	15 mA
Surge withstand	1 kV direct contact IEC 61000-4-5 2 kV in free air IEC 61000-4-5

Environment

Protective treatment	TC
Ambient Air Temperature for Storage	-40…158 °F (-40…70 °C)

Price is “List Price” and may be subject to a trade discount – check with your local distributor or retailer for actual price.

Disclaimer: This documentation is not intended as a substitute for and is not to be used for determining suitability or reliability of these products for specific user applications

Ambient Air Temperature for Operation	-13…158 °F (-25…70 °C)
Electrical shock protection class	Class II conforming to IEC 61140
IP degree of protection	IP65 IEC 60529
NEMA degree of protection	NEMA 13 UL 50 NEMA 4 UL 50 NEMA 4X UL 50 NEMA 13 CSA C22.2 No 94 NEMA 4 CSA C22.2 No 94 NEMA 4X CSA C22.2 No 94
Standards	IEC 60947-5-5 JIS C 852 IEC 60947-1 UL 508 CSA C22.2 No 14 JIS C8201-5-1 IEC 60947-5-1 JIS C8201-1
Product Certifications	UL CCC GOST CSA
Shock resistance	30 gn 18 ms) half sine wave acceleration IEC 60068-2-27 50 gn 11 ms) half sine wave acceleration IEC 60068-2-27
Resistance to fast transients	2 kV IEC 61000-4-4
Resistance to electromagnetic fields	9.1 V/m (10 V/m) IEC 61000-4-3
Resistance to electrostatic discharge	6 kV on contact (on metal parts) IEC 61000-4-2 8 kV in free air (in insulating parts) IEC 61000-4-2
Electromagnetic emission	Class B IEC 55011

Ordering and shipping details

Category	US10CS222459
Discount Schedule	0CS2
GTIN	3389110764468
Returnability	Yes
Country of origin	FR

Packing Units

Unit Type of Package 1	PCE
Nbr. of units in pkg.	1
Package 1 Height	1.772 in (4.500 cm)
Package 1 Width	2.165 in (5.500 cm)
Package 1 Length	2.362 in (6.000 cm)
Package weight(Lbs)	0.564 oz (16.000 g)
Unit Type of Package 2	S02
Number of Units in Package 2	75
Package 2 Height	5.9 in (15 cm)
Package 2 Width	11.8 in (30 cm)
Package 2 Length	15.7 in (40 cm)
Package 2 Weight	3.474 lb(US) (1.576 kg)

Contractual warranty

Warranty (in months)	18

Environmental Data

Schneider Electric aims to achieve Net Zero status by 2050 through supply chain partnerships, lower impact materials, and circularity via our ongoing “Use Better, Use Longer, Use Again” campaign to extend product lifetimes and recyclability.

Environmental Data explained >

How we assess product sustainability >

Environmental footprint

Total lifecycle Carbon footprint	**12 kg CO2 eq.**
Carbon footprint of the manufacturing phase [A1 to A3]	**0.4 kg CO2 eq.**
Carbon footprint of the distribution phase [A4]	**0 kg CO2 eq.**
Carbon footprint of the installation phase [A5]	**0 kg CO2 eq.**
Carbon footprint of the use phase [B2, B3, B4, B6]	**11 kg CO2 eq.**
Carbon footprint of the end-of-life phase [C1 to C4]	**0 kg CO2 eq.**
Environmental Disclosure	Product Environmental Profile

Use Better

Materials and Substances

Packaging made with recycled cardboard	**Yes**
Packaging without single use plastic	**No**
SCIP Number	**902182a2-9610-45f2-840e-6da530122efe**
EU RoHS Directive	Compliant By Exemption
REACh Regulation	Reference contains Substances of Very High Concern above the threshold
California proposition 65	**WARNING: This product can expose you to chemicals including: Lead and lead compounds, which is known to the State of California to cause cancer and birth defects or other reproductive harm. For more information go to www.P65Warnings.ca.gov**

Use Again

Repack and remanufacture

Recyclability potential, in %	**14**
Circularity Profile	End of Life Information
Take-back	**No**
WEEE Label	**The product must be disposed on European Union markets following specific waste collection and never end up in rubbish bins.**

Dimensions Drawings

Circular Head Pilot Light

Dimensions

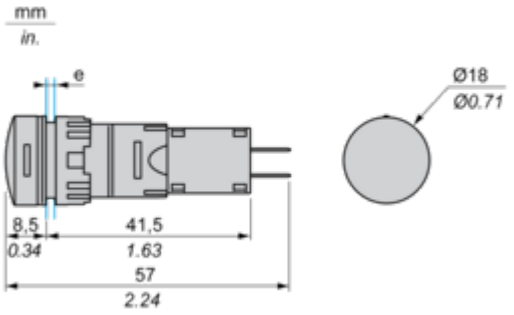

e panel thickness 1 to 6 mm/0.03 to 0.23 in.

Mounting and Clearance

Panel Cut-out

For Square or Circular Head

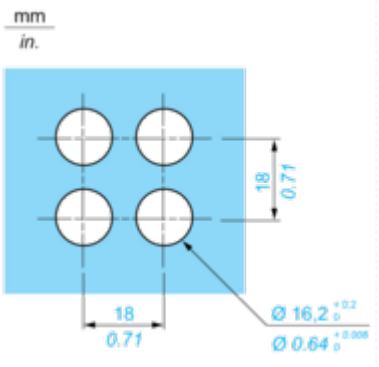

Image of product / Alternate images

Alternative










ZB6-EBxB

