Product data sheet

Specifications



Complete illuminated push button, Harmony XB6, white projecting illum pushbutton Ø 16 spring return 1 NO 12...24 V

XB6AW1B1B

Product availability: Stock - Normally stocked in distribution facility

Main

Range of Product	Harmony XB6
Product or Component Type	Complete illuminated push-button
Device short name	XB6
Bezel material	Plastic
Mounting diameter	0.6 in (16 mm)
Sale per indivisible quantity	1
Shape of signaling unit head	Round
Type of operator	spring return
Operator profile	White flush, unmarked
Contacts type and composition	1 NO
Contact operation	Slow-break
Connections - terminals	Faston connectors 2.8 x 0.5 mm
Light source	LED
Bulb base	Integral LED
[Us] rated supply voltage	12...24 V AC/DC

Complementary

CAD overall width	0.7 in (18 mm)
CAD overall height	0.7 in (18 mm)
CAD overall depth	2.2 in (57 mm)
Terminals description ISO n°1	(13-14)NO
Net Weight	0.049 lb(US) (0.022 kg)
Operating position	Any position
Positive opening	With IEC 60947-5-1 appendix K
Operating travel	0.04 in (1 mm) NO changing electrical state) 0.1 in (3.5 mm) total travel)
Operating force	3.5 N NO changing electrical state
Contacts material	Silver alloy (Ag/Ni)
Short-circuit protection	6 A cartridge fuse gG
[Ui] rated insulation voltage	250 V 3)IEC 60947-1
[Uimp] rated impulse withstand voltage	4 kV IEC 60947-1

Price is “List Price” and may be subject to a trade discount – check with your local distributor or retailer for actual price.

Disclaimer: This documentation is not intended as a substitute for and is not to be used for determining suitability or reliability of these products for specific user applications

[Ie] rated operational current	3 A 120 V, AC-15, B300 IEC 60947-5-1 1.5 A 240 V, AC-15, B300 IEC 60947-5-1 0.1 A 250 V, DC-13, R300 IEC 60947-5-1 0.22 A 125 V, DC-13, R300 IEC 60947-5-1
Electrical durability	1000000 cycles, AC-15 230 V 3600 cyc/h 0.5 IEC 60947-5-1 appendix C 1000000 cycles, DC-13 230 V 3600 cyc/h 0.5 IEC 60947-5-1 appendix C
Electrical reliability	Λ = 10exp(-8) 5 V 1 mA with confidence level of 90 % IEC 60947-5-4
Signalling type	Steady
Supply voltage limits	6…30 V AC/DC
Current Consumption	15 mA
Surge withstand	1 kV direct contact IEC 61000-4-5 2 kV in free air IEC 61000-4-5

Environment

Protective treatment	TC
Ambient Air Temperature for Storage	-40…158 °F (-40…70 °C)
Ambient Air Temperature for Operation	-13…158 °F (-25…70 °C)
Electrical shock protection class	Class II conforming to IEC 61140
IP degree of protection	IP65 IEC 60529
NEMA degree of protection	NEMA 13 UL 50 NEMA 4 UL 50 NEMA 4X UL 50 NEMA 13 CSA C22.2 No 94 NEMA 4 CSA C22.2 No 94 NEMA 4X CSA C22.2 No 94
Standards	JIS C 4520 IEC 60947-1 IEC 60947-5-1 JIS C 852 IEC 60947-5-5 CSA C22.2 No 14
Product Certifications	GOST CSA UL CCC
Shock resistance	30 gn 18 ms) half sine wave acceleration IEC 60068-2-27 50 gn 11 ms) half sine wave acceleration IEC 60068-2-27
Resistance to fast transients	2 kV IEC 61000-4-4
Resistance to electromagnetic fields	9.1 V/m (10 V/m) IEC 61000-4-3
Resistance to electrostatic discharge	6 kV on contact (on metal parts) IEC 61000-4-2 8 kV in free air (in insulating parts) IEC 61000-4-2
Electromagnetic emission	Class B IEC 55011

Ordering and shipping details

Category	US10CS222459
Discount Schedule	0CS2
GTIN	3389110763706
Returnability	Yes
Country of origin	FR

Packing Units

Unit Type of Package 1	PCE
Nbr. of units in pkg.	1
Package 1 Height	1.772 in (4.500 cm)
Package 1 Width	2.165 in (5.500 cm)
Package 1 Length	2.362 in (6.000 cm)
Package weight(Lbs)	0.705 oz (20.000 g)
Unit Type of Package 2	S02
Number of Units in Package 2	75
Package 2 Height	5.9 in (15 cm)
Package 2 Width	11.8 in (30 cm)
Package 2 Length	15.7 in (40 cm)
Package 2 Weight	4.087 lb(US) (1.854 kg)

Contractual warranty

Warranty (in months)	18

Environmental Data

Schneider Electric aims to achieve Net Zero status by 2050 through supply chain partnerships, lower impact materials, and circularity via our ongoing “Use Better, Use Longer, Use Again” campaign to extend product lifetimes and recyclability.

Environmental Data explained >

How we assess product sustainability >

Environmental footprint

Total lifecycle Carbon footprint	**5 kg CO2 eq.**
Carbon footprint of the manufacturing phase [A1 to A3]	**0.4 kg CO2 eq.**
Carbon footprint of the distribution phase [A4]	**0 kg CO2 eq.**
Carbon footprint of the installation phase [A5]	**0 kg CO2 eq.**
Carbon footprint of the use phase [B2, B3, B4, B6]	**5 kg CO2 eq.**
Carbon footprint of the end-of-life phase [C1 to C4]	**0 kg CO2 eq.**
Environmental Disclosure	**Product Environmental Profile**

Use Better

Materials and Substances

Packaging made with recycled cardboard	**Yes**
Packaging without single use plastic	**No**
SCIP Number	**902182a2-9610-45f2-840e-6da530122efe**
EU RoHS Directive	**Compliant By Exemption**
REACh Regulation	**Reference contains Substances of Very High Concern above the threshold**
California proposition 65	**WARNING: This product can expose you to chemicals including: Lead and lead compounds, which is known to the State of California to cause cancer and birth defects or other reproductive harm. For more information go to www.P65Warnings.ca.gov**

Use Again

Repack and remanufacture

Recyclability potential, in %	**14**
Circularity Profile	**End of Life Information**
Take-back	**No**
WEEE Label	**The product must be disposed on European Union markets following specific waste collection and never end up in rubbish bins.**

Dimensions Drawings

Circular Head Pushbutton

Dimensions

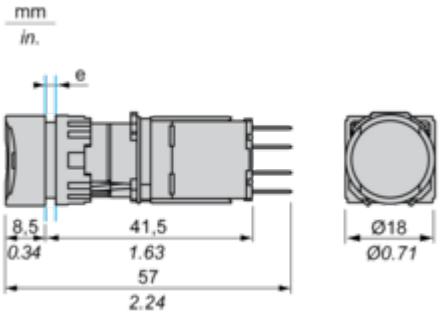

e panel thickness 1 to 6 mm/0.03 to 0.23 in.

Mounting and Clearance

Panel Cut-out

For Square or Circular Head

